General Information 1

TTL Devices 2

Mechanical Data 3

- Package Options Include Plastic "Small Outline" Packages, Ceramic Chip Carriers and Flat Packages, and Plastic and Ceramic DIPs
- Dependable Texas Instruments Quality and Reliability

description

These devices contain four independent 2-input NAND gates.

The SN5400, SN54LS00, and SN54S00 are characterized for operation over the full military temperature range of −55°C to 125°C. The SN7400, SN74LS00, and SN74S00 are characterized for operation from 0°C to 70°C.

FUNCTION TABLE (each gate)

INPUTS		OUTPUT
A	B	Y
H	H	L
L	X	H
X	L	H

logic symbol†

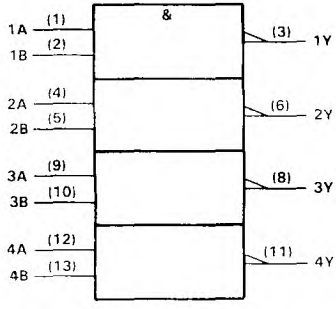

†This symbol is in accordance with ANSI/IEEE Std. 91-1984 and IEC Publication 617-12.
Pin numbers shown are for D, J, and N packages.

SN5400 . . . J PACKAGE
SN54LS00, SN54S00 . . . J OR W PACKAGE
SN7400 . . . N PACKAGE
SN74LS00, SN74S00 . . . D OR N PACKAGE
(TOP VIEW)

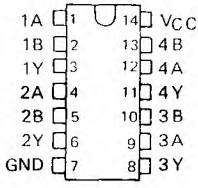

SN5400 . . . W PACKAGE
(TOP VIEW)

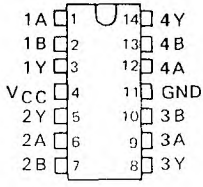

SN54LS00, SN54S00 . . . FK PACKAGE
(TOP VIEW)

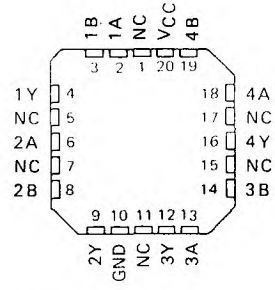

NC No internal connection

logic diagram (positive logic)

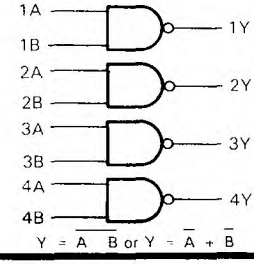

$Y = \overline{A \cdot B}$ or $Y = \overline{A} + \overline{B}$

PRODUCTION DATA documents contain information current as of publication date. Products conform to specifications per the terms of Texas Instruments standard warranty. Production processing does not necessarily include testing of all parameters.

schematics (each gate)

'00

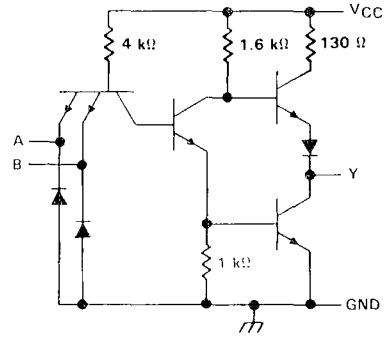

'LS00

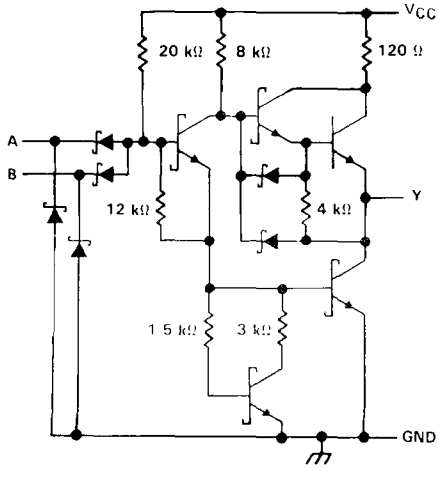

'S00

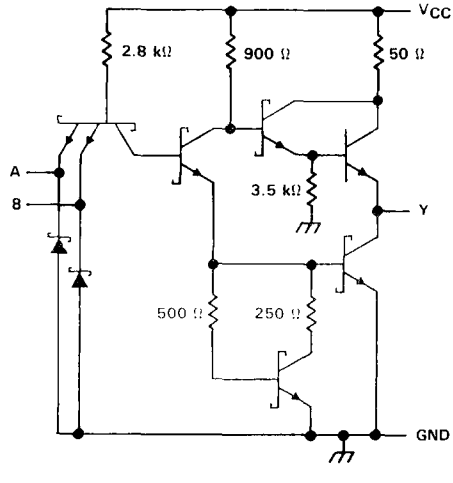

Resistor values shown are nominal.

absolute maximum ratings over operating free-air temperature range (unless otherwise noted)

Supply voltage, V_{CC} (see Note 1)		7 V
Input voltage: '00, 'S00		5.5 V
'LS00		7 V
Operating free-air temperature range: SN54'		−55°C to 125°C
SN74'		0°C to 70°C
Storage temperature range		−65°C to 150°C

NOTE 1: Voltage values are with respect to network ground terminal.

TEXAS INSTRUMENTS
POST OFFICE BOX 655012 • DALLAS, TEXAS 75265

recommended operating conditions

	SN5400			SN7400			UNIT
	MIN	NOM	MAX	MIN	NOM	MAX	
V_{CC} Supply voltage	4.5	5	5.5	4.75	5	5.25	V
V_{IH} High-level input voltage	2			2			V
V_{IL} Low-level input voltage			0.8			0.8	V
I_{OH} High-level output current			−0.4			−0.4	mA
I_{OL} Low-level output current			16			16	mA
T_A Operating free-air temperature	−55		125	0		70	°C

electrical characteristics over recommended operating free-air temperature range (unless otherwise noted)

PARAMETER	TEST CONDITIONS†	SN5400			SN7400			UNIT
		MIN	TYP‡	MAX	MIN	TYP‡	MAX	
V_{IK}	V_{CC} = MIN, I_I = −12 mA			−1.5			−1.5	V
V_{OH}	V_{CC} = MIN, V_{IL} = 0.8 V, I_{OH} = −0.4 mA	2.4	3.4		2.4	3.4		V
V_{OL}	V_{CC} = MIN, V_{IH} = 2 V, I_{OL} = 16 mA		0.2	0.4		0.2	0.4	V
I_I	V_{CC} = MAX, V_I = 5.5 V			1			1	mA
I_{IH}	V_{CC} = MAX, V_I = 2.4 V			40			40	μA
I_{IL}	V_{CC} = MAX, V_I = 0.4 V			−1.6			−1.6	mA
I_{OS}§	V_{CC} = MAX	−20		−55	−18		−55	mA
I_{CCH}	V_{CC} = MAX, V_I = 0 V		4	8		4	8	mA
I_{CCL}	V_{CC} = MAX, V_I = 4.5 V		12	22		12	22	mA

† For conditions shown as MIN or MAX, use the appropriate value specified under recommended operating conditions.
‡ All typical values are at V_{CC} = 5 V, T_A = 25°C.
§ Not more than one output should be shorted at a time.

switching characteristics, V_{CC} = 5 V, T_A = 25°C (see note 2)

PARAMETER	FROM (INPUT)	TO (OUTPUT)	TEST CONDITIONS	MIN	TYP	MAX	UNIT
t_{PLH}	A or B	Y	R_L = 400 Ω, C_L = 15 pF		11	22	ns
t_{PHL}					7	15	ns

NOTE 2: Load circuits and voltage waveforms are shown in Section 1.

FAN OUT = $\frac{I_{OL}}{I_{IL}} = \frac{16\,mA}{1.6\,mA} = 10$

recommended operating conditions

	SN54LS00			SN74LS00			UNIT
	MIN	NOM	MAX	MIN	NOM	MAX	
V_{CC} Supply voltage	4.5	5	5.5	4.75	5	5.25	V
V_{IH} High-level input voltage	2			2			V
V_{IL} Low-level input voltage			0.7			0.8	V
I_{OH} High-level output current			−0.4			−0.4	mA
I_{OL} Low-level output current			4			8	mA
T_A Operating free-air temperature	−55		125	0		70	°C

electrical characteristics over recommended operating free-air temperature range (unless otherwise noted)

PARAMETER	TEST CONDITIONS †			SN54LS00			SN74LS00			UNIT
				MIN	TYP‡	MAX	MIN	TYP‡	MAX	
V_{IK}	V_{CC} = MIN,	I_I = −18 mA				−1.5			−1.5	V
V_{OH}	V_{CC} = MIN,	V_{IL} = MAX,	I_{OH} = −0.4 mA	2.5	3.4		2.7	3.4		V
V_{OL}	V_{CC} = MIN,	V_{IH} = 2 V,	I_{OL} = 4 mA		0.25	0.4		0.25	0.4	V
	V_{CC} = MIN,	V_{IH} = 2 V,	I_{OL} = 8 mA					0.35	0.5	
I_I	V_{CC} = MAX,	V_I = 7 V				0.1			0.1	mA
I_{IH}	V_{CC} = MAX,	V_I = 2.7 V				20			20	μA
I_{IL}	V_{CC} = MAX,	V_I = 0.4 V				−0.4			−0.4	mA
I_{OS}§	V_{CC} = MAX			−20		−100	−20		−100	mA
I_{CCH}	V_{CC} = MAX,	V_I = 0 V			0.8	1.6		0.8	1.6	mA
I_{CCL}	V_{CC} = MAX,	V_I = 4.5 V			2.4	4.4		2.4	4.4	mA

† For conditions shown as MIN or MAX, use the appropriate value specified under recommended operating conditions.
‡ All typical values are at V_{CC} = 5 V, T_A = 25°C
§ Not more than one output should be shorted at a time, and the duration of the short-circuit should not exceed one second.

switching characteristics, V_{CC} = 5 V, T_A = 25°C (see note 2)

PARAMETER	FROM (INPUT)	TO (OUTPUT)	TEST CONDITIONS	MIN	TYP	MAX	UNIT
t_{PLH}	A or B	Y	R_L = 2 kΩ, C_L = 15 pF		9	15	ns
t_{PHL}					10	15	ns

NOTE 2: Load circuits and voltage waveforms are shown in Section 1.

recommended operating conditions

	SN54S00			SN74S00			UNIT
	MIN	NOM	MAX	MIN	NOM	MAX	
V_{CC} Supply voltage	4.5	5	5.5	4.75	5	5.25	V
V_{IH} High-level input voltage	2			2			V
V_{IL} Low-level input voltage			0.8			0.8	V
I_{OH} High-level output current			−1			−1	mA
I_{OL} Low-level output current			20			20	mA
T_A Operating free-air temperature	−55		125	0		70	°C

electrical characteristics over recommended operating free-air temperature range (unless otherwise noted)

PARAMETER	TEST CONDITIONS †	SN54S00			SN74S00			UNIT
		MIN	TYP‡	MAX	MIN	TYP‡	MAX	
V_{IK}	V_{CC} = MIN, I_I = −18 mA			−1.2			−1.2	V
V_{OH}	V_{CC} = MIN, V_{IL} = 0.8 V, I_{OH} = −1 mA	2.5	3.4		2.7	3.4		V
V_{OL}	V_{CC} = MIN, V_{IH} = 2 V, I_{OL} = 20 mA			0.5			0.5	V
I_I	V_{CC} = MAX, V_I = 5.5 V			1			1	mA
I_{IH}	V_{CC} = MAX, V_I = 2.7 V			50			50	μA
I_{IL}	V_{CC} = MAX, V_I = 0.5 V			−2			−2	mA
I_{OS}§	V_{CC} = MAX	−40		−100	−40		−100	mA
I_{CCH}	V_{CC} = MAX, V_I = 0 V		10	16		10	16	mA
I_{CCL}	V_{CC} = MAX, V_I = 4.5 V		20	36		20	36	mA

† For conditions shown as MIN or MAX, use the appropriate value specified under recommended operating conditions.
‡ All typical values are at V_{CC} = 5 V, T_A = 25°C.
§ Not more than one output should be shorted at a time, and the duration of the short-circuit should not exceed one second.

switching characteristics, V_{CC} = 5 V, T_A = 25°C (see note 2)

PARAMETER	FROM (INPUT)	TO (OUTPUT)	TEST CONDITIONS	MIN	TYP	MAX	UNIT
t_{PLH}	A or B	Y	R_L = 280 Ω, C_L = 15 pF		3	4.5	ns
t_{PHL}					3	5	ns
t_{PLH}			R_L = 280 Ω, C_L = 50 pF		4.5		ns
t_{PHL}					5		ns

NOTE 2: Load circuits and voltage waveforms are shown in Section 1.

QUADRUPLE 2-INPUT POSITIVE-NAND GATES WITH OPEN-COLLECTOR OUTPUTS

APRIL 1985 – REVISED MARCH 1988

- **Package Options Include Plastic "Small Outline" Packages, Ceramic Chip Carriers and Flat Packages, and Plastic and Ceramic DIPs**
- **Dependable Texas Instruments Quality and Reliability**

description

These devices contain four independent 2-input NAND gates. The open-collector outputs require pull-up resistors to perform correctly. They may be connected to other open-collector outputs to implement active-low wired-OR or active-high wired-AND functions. Open-collector devices are often used to generate higher V_{OH} levels.

The SN5401 and SN54LS01 are characterized for operation over the full military temperature range of −55°C to 125°C. The SN7401 and SN74LS01 are characterized for operation from 0°C to 70°C.

FUNCTION TABLE (each gate)

INPUTS		OUTPUT
A	B	Y
H	H	L
L	X	H
X	L	H

logic symbol†

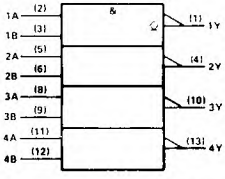

†This symbol is in accordance with ANSI/IEEE Std. 91-1984 and IEC Publication 617-12.
Pin numbers shown are for D, J, N, and W packages.

SN5401 . . . J PACKAGE
SN54LS01 . . . J OR W PACKAGE
SN7401 . . . N PACKAGE
SN74LS01 . . . D OR N PACKAGE
(TOP VIEW)

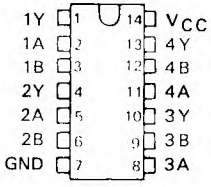

SN5401 . . . W PACKAGE
(TOP VIEW)

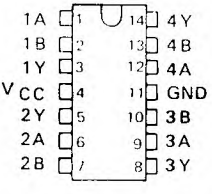

SN54LS01 . . . FK PACKAGE
(TOP VIEW)

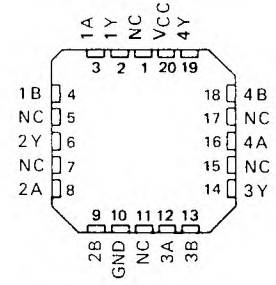

NC – No internal connection

PRODUCTION DATA documents contain information current as of publication date. Products conform to specifications per the terms of Texas Instruments standard warranty. Production processing does not necessarily include testing of all parameters.

logic diagram (positive logic)

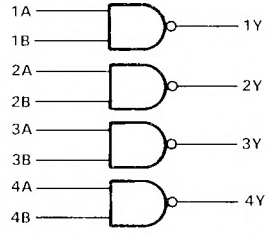

positive logic: $Y = \overline{A \cdot B}$ or $Y = \overline{A} + \overline{B}$

schematics (each gate)

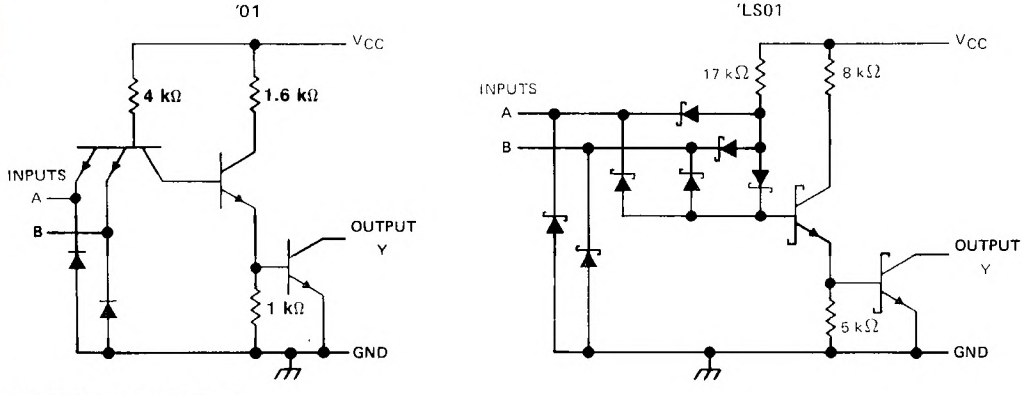

Resistor values shown are nominal

absolute-maximum ratings over operating free-air temperature range (unless otherwise noted)

Supply voltage, V_{CC} (see Note 1): '01, 'LS01 . . . . . 7 V
Input voltage: '01 . . . . . 5.5 V
'LS01 . . . . . 7 V
Off-state output voltage . . . . . 7 V
Operating free-air temperature range: SN54' . . . . . −55°C to 125°C
SN74' . . . . . 0°C to 70°C
Storage temperature range . . . . . −65°C to 150°C

NOTE 1: Voltage values are with respect to network ground terminals.

TEXAS INSTRUMENTS
POST OFFICE BOX 655012 • DALLAS, TEXAS 75265

recommended operating conditions

		SN5401			SN7401			UNIT
		MIN	NOM	MAX	MIN	NOM	MAX	
V_{CC}	Supply voltage	4.5	5	5.5	4.75	5	5.25	V
V_{IH}	High-level input voltage	2			2			V
V_{IL}	Low-level input voltage			0.8			0.8	V
V_{OH}	High-level output voltage			5.5			5.5	V
I_{OL}	Low-level output current			16			16	mA
T_A	Operating free-air temperature	−55		125	0		70	°C

electrical characteristics over recommended operating free-air temperature range (unless otherwise noted)

PARAMETER	TEST CONDITIONS†	SN5401			SN7401			UNIT
		MIN	TYP‡	MAX	MIN	TYP‡	MAX	
V_{IK}	V_{CC} = MIN, I_I = −12 mA			−1.5			−1.5	V
I_{OH}	V_{CC} = MIN, V_{IL} = 0.8 V, V_{OH} = 5.5 V						0.25	mA
	V_{CC} = MIN, V_{IL} = 0.7 V, V_{OH} = 5.5 V			0.25				
V_{OL}	V_{CC} = MIN, V_{IH} = 2 V, I_{OL} = 16 mA		0.2	0.4		0.2	0.4	V
I_I	V_{CC} = MAX, V_I = 5.5 V			1			1	mA
I_{IH}	V_{CC} = MAX, V_I = 2.4 V			40			40	μA
I_{IL}	V_{CC} = MAX, V_I = 0.4 V			−1.6			−1.6	mA
I_{CCH}	V_{CC} = MAX, V_I = 0		4	8		4	8	mA
I_{CCL}	V_{CC} = MAX, V_I = 4.5 V		12	22		12	22	mA

†For conditions shown as MIN or MAX, use the appropriate value specified under recommended operating conditions.
‡All typical values are at V_{CC} = 5 V, T_A = 25°C.

switching characteristics, V_{CC} = 5 V, T_A = 25°C (see note 2)

PARAMETER	FROM (INPUT)	TO (OUTPUT)	TEST CONDITIONS		MIN	TYP	MAX	UNIT
t_{PLH}	A or B	Y	R_L = 4 kΩ,	C_L = 15 pF		35	55	ns
t_{PHL}			R_L = 400 Ω,	C_L = 15 pF		8	15	ns

NOTE 2: Load circuits and voltage waveforms are shown in Section 1.

recommended operating conditions

	SN54LS01			SN74LS01			UNIT
	MIN	NOM	MAX	MIN	NOM	MAX	
V_{CC} Supply voltage	4.5	5	5.5	4.75	5	5.25	V
V_{IH} High-level input voltage	2			2			V
V_{IL} Low-level input voltage			0.7			0.8	V
V_{OH} High-level output voltage			5.5			5.5	V
I_{OL} Low-level output current			4			8	mA
T_A Operating free-air temperature	−55		125	0		70	°C

electrical characteristics over recommended operating free-air temperature range (unless otherwise noted)

PARAMETER	TEST CONDITIONS†			SN54LS01			SN74LS01			UNIT
				MIN	TYP‡	MAX	MIN	TYP‡	MAX	
V_{IK}	V_{CC} = MIN,	I_I = −18 mA				−1.5			−1.5	V
I_{OH}	V_{CC} = MIN,	V_{IL} = MAX,	V_{OH} = 5.5 V			0.1			0.1	mA
V_{OL}	V_{CC} = MIN,	V_{IH} = 2 V,	I_{OL} = 4 mA		0.25	0.4		0.25	0.4	V
	V_{CC} = MIN,	V_{IH} = 2 V,	I_{OL} = 8 mA					0.35	0.5	
I_I	V_{CC} = MAX,	V_I = 7 V				0.1			0.1	mA
I_{IH}	V_{CC} = MAX,	V_I = 2.7 V				20			20	μA
I_{IL}	V_{CC} = MAX,	V_I = 0.4 V				−0.4			−0.4	mA
I_{CCH}	V_{CC} = MAX,	V_I = 0			0.8	1.6		0.8	1.6	mA
I_{CCL}	V_{CC} = MAX,	V_I = 4.5 V			2.4	4.4		2.4	4.4	mA

† For conditions shown as MIN or MAX, use the appropriate value specified under recommended operating conditions.
‡ All typical values are at V_{CC} = 5 V, T_A = 25°C.

switching characteristics, V_{CC} = 5 V, T_A = 25°C (see note 2)

PARAMETER	FROM (INPUT)	TO (OUTPUT)	TEST CONDITIONS	MIN	TYP	MAX	UNIT
t_{PLH}	A or B	Y	R_L = 2 kΩ, C_L = 15 pF		17	32	ns
t_{PHL}					15	28	ns

NOTE 2: Load circuits and voltage waveforms are shown in Section 1.

TEXAS INSTRUMENTS
POST OFFICE BOX 655012 • DALLAS, TEXAS 75265

- Package Options Include Plastic "Small Outline" Packages, Ceramic Chip Carriers and Flat Packages, and Plastic and Ceramic DIPs
- Dependable Texas Instruments Quality and Reliability

description

These devices contain four independent 2-input NOR gates.

The SN5402, SN54LS02, and SN54S02 are characterized for operation over the full military temperature range of −55°C to 125°C. The SN7402, SN74LS02, and SN74S02 are characterized for operation from 0°C to 70°C.

FUNCTION TABLE (each gate)

INPUTS		OUTPUT
A	B	Y
H	X	L
X	H	L
L	L	H

logic symbol†

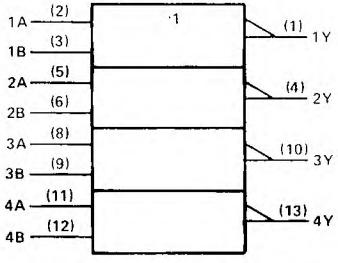

†This symbol is in accordance with ANSI/IEEE Std 91-1984 and IEC Publication 617-12.
Pin numbers shown are for D, J, and N packages.

logic diagram (positive logic)

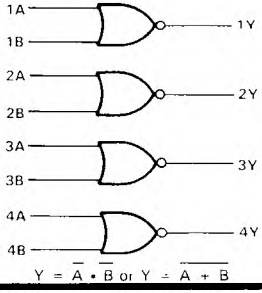

$Y = \overline{A} \cdot \overline{B}$ or $Y = \overline{A + B}$

SN5402 . . . J PACKAGE
SN54LS02, SN54S02 . . . J OR W PACKAGE
SN7402 . . . N PACKAGE
SN74LS02, SN74S02 . . . D OR N PACKAGE
(TOP VIEW)

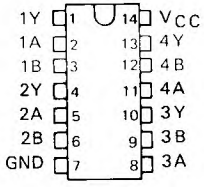

SN5402 . . . W PACKAGE
(TOP VIEW)

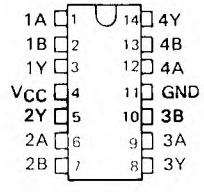

SN54LS02, SN54S02 . . . FK PACKAGE
(TOP VIEW)

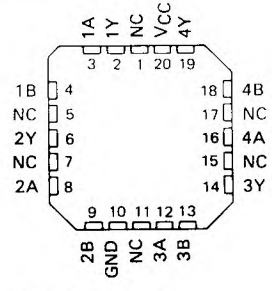

NC - No internal connection

PRODUCTION DATA documents contain information current as of publication date. Products conform to specifications per the terms of Texas Instruments standard warranty. Production processing does not necessarily include testing of all parameters.

schematics (each gate)

'02

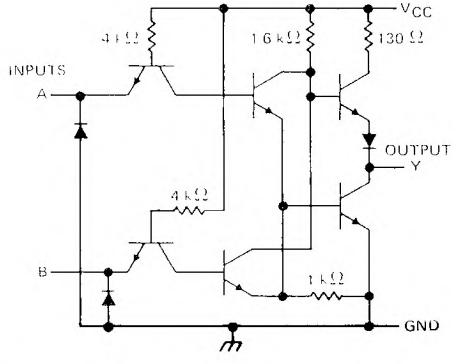

'LS02

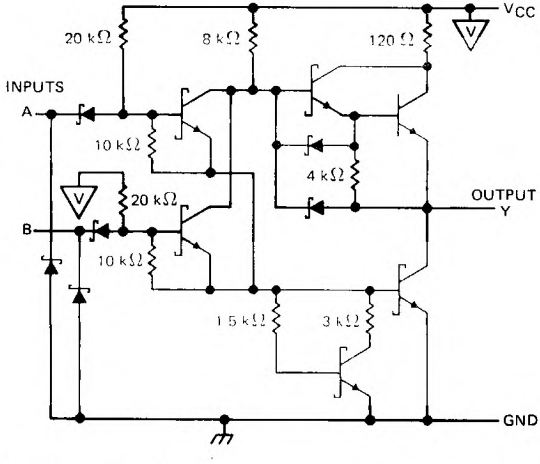

'S02

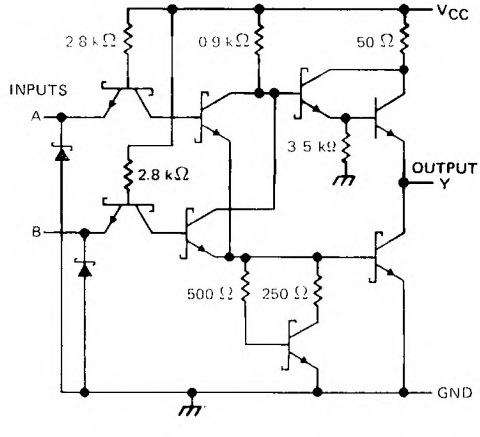

Resistor values shown are nominal.

absolute maximum ratings over operating free-air temperature range (unless otherwise noted)

Supply voltage, V_{CC} (see Note 1) . . . . . 7 V
Input voltage: '02, 'S02 . . . . . 5.5 V
'LS02 . . . . . 7 V
Off-state output voltage . . . . . 7 V
Operating free-air temperature range: SN54' . . . . . −55°C to 125°C
SN74' . . . . . 0°C to 70°C
Storage temperature range . . . . . −65°C to 150°C

NOTE 1. Voltage values are with respect to network ground terminal.

TEXAS INSTRUMENTS
POST OFFICE BOX 655012 • DALLAS, TEXAS 75265

recommended operating conditions

		SN5402			SN7402			UNIT
		MIN	NOM	MAX	MIN	NOM	MAX	
V_{CC}	Supply voltage	4.5	5	5.5	4.75	5	5.25	V
V_{IH}	High-level input voltage	2			2			V
V_{IL}	Low-level input voltage			0.8			0.8	V
I_{OH}	High-level output current			−0.4			−0.4	mA
I_{OL}	Low-level output current			16			16	mA
T_A	Operating free-air temperature	−55		125	0		70	°C

electrical characteristics over recommended operating free-air temperature range (unless otherwise noted)

PARAMETER	TEST CONDITIONS†	SN5402			SN7402			UNIT
		MIN	TYP‡	MAX	MIN	TYP‡	MAX	
V_{IK}	V_{CC} = MIN, I_I = −12 mA			−1.5			−1.5	V
V_{OH}	V_{CC} = MIN, V_{IL} = 0.8 V, I_{OH} = −0.4 mA	2.4	3.4		2.4	3.4		V
V_{OL}	V_{CC} = MIN, V_{IH} = 2 V, I_{OL} = 16 mA		0.2	0.4		0.2	0.4	V
I_I	V_{CC} = MAX, V_I = 5.5 V			1			1	mA
I_{IH}	V_{CC} = MAX, V_I = 2.4 V			40			40	μA
I_{IL}	V_{CC} = MAX, V_I = 0.4 V			−1.6			−1.6	mA
I_{OS}§	V_{CC} = MAX	−20		−55	−18		−55	mA
I_{CCH}	V_{CC} = MAX, V_I = 0 V		8	16		8	16	mA
I_{CCL}	V_{CC} = MAX, See Note 2		14	27		14	27	mA

† For conditions shown as MIN or MAX, use the appropriate value specified under recommended operating conditions.
‡ All typical values are at V_{CC} = 5 V, T_A = 25°C
§ Not more than one output should be shorted at a time.
NOTE 2: One input at 4.5 V, all others at GND.

switching characteristics, V_{CC} = 5 V, T_A = 25°C (see note 3)

PARAMETER	FROM (INPUT)	TO (OUTPUT)	TEST CONDITIONS	MIN	TYP	MAX	UNIT
t_{PLH}	A or B	Y	R_L = 400 Ω, C_L = 15 pF		12	22	ns
t_{PHL}					8	15	ns

NOTE 3: Load circuits and voltage waveforms are shown in Section 1

recommended operating conditions

		SN54LS02			SN74LS02			UNIT
		MIN	NOM	MAX	MIN	NOM	MAX	
V_{CC}	Supply voltage	4.5	5	5.5	4.75	5	5.25	V
V_{IH}	High-level input voltage	2			2			V
V_{IL}	Low-level input voltage			0.7			0.8	V
I_{OH}	High-level output current			−0.4			−0.4	mA
I_{OL}	Low-level output current			4			8	mA
T_A	Operating free-air temperature	−55		125	0		70	°C

electrical characteristics over recommended operating free-air temperature range (unless otherwise noted)

PARAMETER	TEST CONDITIONS †			SN54LS02			SN74LS02			UNIT
				MIN	TYP‡	MAX	MIN	TYP‡	MAX	
V_{IK}	V_{CC} = MIN,	I_I = −18 mA				−1.5			−1.5	V
V_{OH}	V_{CC} = MIN,	V_{IL} = MAX,	I_{OH} = −0.4 mA	2.5	3.4		2.7	3.4		V
V_{OL}	V_{CC} = MIN,	V_{IH} = 2 V,	I_{OL} = 4 mA		0.25	0.4		0.25	0.4	V
	V_{CC} = MIN,	V_{IH} = 2 V,	I_{OL} = 8 mA					0.35	0.5	
I_I	V_{CC} = MAX,	V_I = 7 V				0.1			0.1	mA
I_{IH}	V_{CC} = MAX,	V_I = 2.7 V				20			20	μA
I_{IL}	V_{CC} = MAX,	V_I = 0.4 V				−0.4			−0.4	mA
I_{OS}§	V_{CC} = MAX			−20		−100	−20		−100	mA
I_{CCH}	V_{CC} = MAX,	V_I = 0 V			1.6	3.2		1.6	3.2	mA
I_{CCL}	V_{CC} = MAX,	See Note 2			2.8	5.4		2.8	5.4	mA

† For conditions shown as MIN or MAX, use the appropriate value specified under recommended operating conditions.
‡ All typical values are at V_{CC} = 5 V, T_A = 25°C
§ Not more than one output should be shorted at a time, and the duration of the short-circuit should not exceed one second.
NOTE 2: One input at 4.5 V, all others at GND.

switching characteristics, V_{CC} = 5 V, T_A = 25°C (see note 3)

PARAMETER	FROM (INPUT)	TO (OUTPUT)	TEST CONDITIONS	MIN	TYP	MAX	UNIT
t_{PLH}	A or B	Y	R_L = 2 kΩ, C_L = 15 pF		10	15	ns
t_{PHL}					10	15	ns

NOTE 3: Load circuits and voltage waveforms are shown in Section 1.

TEXAS INSTRUMENTS
POST OFFICE BOX 655012 • DALLAS, TEXAS 75265

recommended operating conditions

		SN54S02			SN74S02			UNIT
		MIN	NOM	MAX	MIN	NOM	MAX	
V_{CC}	Supply voltage	4.5	5	5.5	4.75	5	5.25	V
V_{IH}	High-level input voltage	2			2			V
V_{IL}	Low-level input voltage			0.8			0.8	V
I_{OH}	High-level output current			−1			−1	mA
I_{OL}	Low-level output current			20			20	mA
T_A	Operating free-air temperature	−55		125	0		70	°C

electrical characteristics over recommended operating free-air temperature range (unless otherwise noted)

PARAMETER	TEST CONDITIONS †			SN54S02			SN74S02			UNIT
				MIN	TYP‡	MAX	MIN	TYP‡	MAX	
V_{IK}	V_{CC} = MIN,	I_I = −18 mA				−1.2			−1.2	V
V_{OH}	V_{CC} = MIN,	V_{IL} = 0.8 V,	I_{OH} = −1 mA	2.5	3.4		2.7	3.4		V
V_{OL}	V_{CC} = MIN,	V_{IH} = 2 V,	I_{OL} = 20 mA			0.5			0.5	V
I_I	V_{CC} = MAX,	V_I = 5.5 V				1			1	mA
I_{IH}	V_{CC} = MAX,	V_I = 2.7 V				50			50	μA
I_{IL}	V_{CC} = MAX,	V_I = 0.5 V				−2			−2	mA
I_{OS}§	V_{CC} = MAX			−40		−100	−40		−100	mA
I_{CCH}	V_{CC} = MAX,	V_I = 0 V			17	29		17	29	mA
I_{CCL}	V_{CC} = MAX,	See Note 2			26	45		26	45	mA

† For conditions shown as MIN or MAX, use the appropriate value specified under recommended operating conditions.
‡ All typical values are at V_{CC} = 5 V, T_A = 25°C.
§ Not more than one output should be shorted at a time, and the duration of the short-circuit should not exceed one second.
NOTE 2: One input at 4.5 V, all others at GND.

switching characteristics, V_{CC} = 5 V, T_A = 25°C (see note 3)

PARAMETER	FROM (INPUT)	TO (OUTPUT)	TEST CONDITIONS	MIN	TYP	MAX	UNIT
t_{PLH}	A or B	Y	R_L = 280 Ω, C_L = 15 pF		3.5	5.5	ns
t_{PHL}					3.5	5.5	ns
t_{PLH}			R_L = 280 Ω, C_L = 50 pF		5		ns
t_{PHL}					5		ns

NOTE 3: Load circuits and voltage waveforms are shown in Section 1.

QUADRUPLE 2-INPUT POSITIVE-NAND GATES WITH OPEN-COLLECTOR OUTPUTS

DECEMBER 1983 – REVISED MARCH 1988

- **Package Options Include Plastic "Small Outline" Packages, Ceramic Chip Carriers and Flat Packages, and Plastic and Ceramic DIPs**
- **Dependable Texas Instruments Quality and Reliability**

description

These devices contain four independent 2-input-NAND gates. The open-collector outputs require pull-up resistors to perform correctly. They may be connected to other open-collector outputs to implement active-low wired-OR or active-high wired-AND functions. Open-collector devices are often used to generate higher V_{OH} levels.

The SN5403, SN54LS03 and SN54S03 are characterized for operation over the full military temperature range of −55°C to 125°C. The SN7403, SN74LS03 and SN74S03 are characterized for operation from 0°C to 70°C.

FUNCTION TABLE (each gate)

INPUTS		OUTPUT
A	B	Y
H	H	L
L	X	H
X	L	H

SN5403 . . . J OR W PACKAGE
SN54LS03, SN54S03 . . . J OR W PACKAGE
SN7403 . . . N PACKAGE
SN74LS03, SN74S03 . . . D OR N PACKAGE
(TOP VIEW)

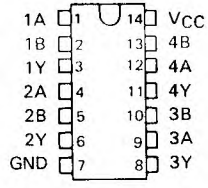

SN54LS03, SN54S03 . . . FK PACKAGE
(TOP VIEW)

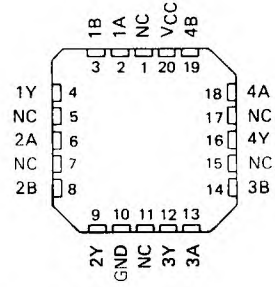

NC - No internal connection

logic symbol†

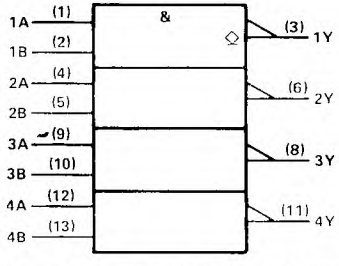

† This symbol is in accordance with ANSI/IEEE Std 91-1984 and IEC Publication 617-12.
Pin numbers shown are for D, J, N, and W packages.

logic diagram (positive logic)

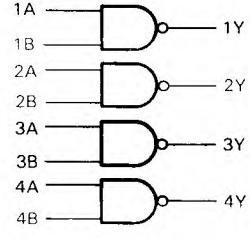

$Y = \overline{A \cdot B}$ or $Y = \overline{A} + \overline{B}$

PRODUCTION DATA documents contain information current as of publication date. Products conform to specifications per the terms of Texas Instruments standard warranty. Production processing does not necessarily include testing of all parameters.

schematics (each gate)

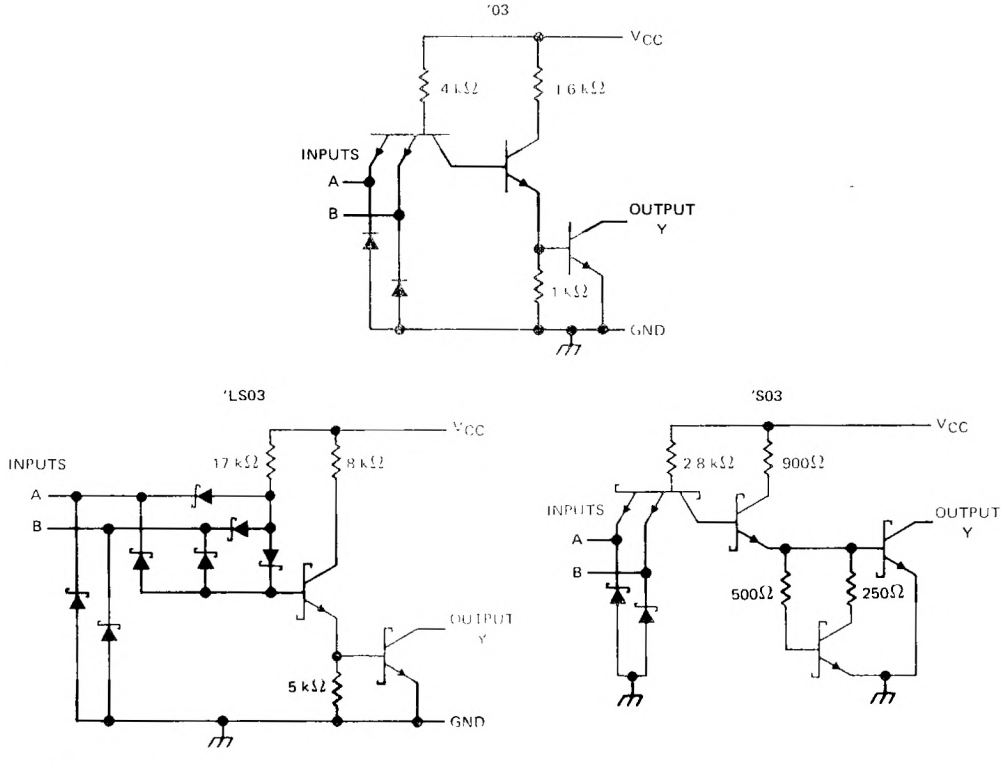

Resistor values shown are nominal

absolute maximum ratings over operating free-air temperature range (unless otherwise noted)

Supply voltage, V_{CC} (see Note 1) . . . . . 7 V
Input voltage: '03, 'S03 . . . . . 5.5 V
'LS03 . . . . . 7 V
Off-state output voltage . . . . . 7 V
Operating free-air temperature range: SN54' . . . . . −55°C to 125°C
SN74' . . . . . 0°C to 70°C
Storage temperature range . . . . . −65°C to 150°C

NOTE 1: Voltage values are with respect to network ground terminal.

recommended operating conditions

	SN5403			SN7403			UNIT
	MIN	NOM	MAX	MIN	NOM	MAX	
V_{CC} Supply voltage	4.5	5	5.5	4.75	5	5.25	V
V_{IH} High-level input voltage	2			2			V
V_{IL} Low-level input voltage			0.8			0.8	V
V_{OH} High-level output voltage			5.5			5.5	V
I_{OL} Low-level output current			16			16	mA
T_A Operating free-air temperature	−55		125	0		70	°C

electrical characteristics over recommended operating free-air temperature range (unless otherwise noted)

PARAMETER	TEST CONDITIONS†	SN5403			SN7403			UNIT
		MIN	TYP‡	MAX	MIN	TYP‡	MAX	
V_{IK}	V_{CC} = MIN, I_I = −12 mA			−1.5			−1.5	V
I_{OH}	V_{CC} = MIN, V_{IL} = 0.8 V, V_{OH} = 5.5 V						0.25	mA
	V_{CC} = MIN, V_{IL} = 0.7 V, V_{OH} = 5.5 V			0.25				
V_{OL}	V_{CC} = MIN, V_{IH} = 2 V, I_{OL} = 16 mA		0.2	0.4		0.2	0.4	V
I_I	V_{CC} = MAX, V_I = 5.5 V			1			1	mA
I_{IH}	V_{CC} = MAX, V_I = 2.4 V			40			40	μA
I_{IL}	V_{CC} = MAX, V_I = 0.4 V			−1.6			−1.6	mA
I_{CCH}	V_{CC} = MAX, V_I = 0		4	8		4	8	mA
I_{CCL}	V_{CC} = MAX, V_I = 4.5 V		12	22		12	22	mA

†For conditions shown as MIN or MAX, use the appropriate value specified under recommended operating conditions.
‡All typical values are at V_{CC} = 5 V, T_A = 25°C.

switching characteristics, V_{CC} = 5 V, T_A = 25°C (see note 2)

PARAMETER	FROM (INPUT)	TO (OUTPUT)	TEST CONDITIONS	MIN	TYP	MAX	UNIT
t_{PLH}	A or B	Y	R_L = 4 kΩ, C_L = 15 pF		35	45	ns
t_{PHL}			R_L = 400 Ω, C_L = 15 pF		8	15	ns

NOTE 2: Load circuits and voltage waveforms are shown in Section 1

recommended operating conditions

	SN54LS03			SN74LS03			UNIT
	MIN	NOM	MAX	MIN	NOM	MAX	
V_{CC} Supply voltage	4.5	5	5.5	4.75	5	5.25	V
V_{IH} High-level input voltage	2			2			V
V_{IL} Low-level input voltage			0.7			0.8	V
V_{OH} High-level output voltage			5.5			5.5	V
I_{OL} Low-level output current			4			8	mA
T_A Operating free-air temperature	−55		125	0		70	°C

electrical characteristics over recommended operating free-air temperature range (unless otherwise noted)

PARAMETER	TEST CONDITIONS†			SN54LS03			SN74LS03			UNIT
				MIN	TYP‡	MAX	MIN	TYP‡	MAX	
V_{IK}	V_{CC} = MIN,	I_I = −18 mA				−1.5			−1.5	V
I_{OH}	V_{CC} = MIN,	V_{IL} = MAX,	V_{OH} = 5.5 V			0.1			0.1	mA
V_{OL}	V_{CC} = MIN,	V_{IH} = 2 V,	I_{OL} = 4 mA		0.25	0.4		0.25	0.4	V
	V_{CC} = MIN,	V_{IH} = 2 V,	I_{OL} = 8 mA					0.35	0.5	
I_I	V_{CC} = MAX,	V_I = 7 V				0.1			0.1	mA
I_{IH}	V_{CC} = MAX,	V_I = 2.7 V				20			20	μA
I_{IL}	V_{CC} = MAX,	V_I = 0.4 V				−0.4			−0.4	mA
I_{CCH}	V_{CC} = MAX,	V_I = 0			0.8	1.6		0.8	1.6	mA
I_{CCL}	V_{CC} = MAX,	V_I = 4.5 V			2.4	4.4		2.4	4.4	mA

† For conditions shown as MIN or MAX, use the appropriate value specified under recommended operating conditions.
‡ All typical values are at V_{CC} = 5 V, T_A = 25°C

switching characteristics, V_{CC} = 5 V, T_A = 25°C (see note 2)

PARAMETER	FROM (INPUT)	TO (OUTPUT)	TEST CONDITIONS	MIN	TYP	MAX	UNIT
t_{PLH}	A or B	Y	R_L = 2 kΩ, C_L = 15 pF		17	32	ns
t_{PHL}					15	28	ns

NOTE 2: Load circuits and voltage waveforms are shown in Section 1.

TEXAS INSTRUMENTS
POST OFFICE BOX 655012 • DALLAS, TEXAS 75265

recommended operating conditions

		SN54S03			SN74S03			UNIT
		MIN	NOM	MAX	MIN	NOM	MAX	
V_{CC}	Supply voltage	4.5	5	5.5	4.75	5	5.25	V
V_{IH}	High-level input voltage	2			2			V
V_{IL}	Low-level input voltage			0.8			0.8	V
V_{OH}	High-level output voltage			5.5			5.5	V
I_{OL}	Low-level output current			20			20	mA
T_A	Operating free-air temperature	−55		125	0		70	°C

electrical characteristics over recommended operating free-air temperature range (unless otherwise noted)

PARAMETER	TEST CONDITIONS†		SN54S03			SN74S03			UNIT
			MIN	TYP‡	MAX	MIN	TYP‡	MAX	
V_{IK}	V_{CC} = MIN, I_I = −18 mA				−1.2			−1.2	V
I_{OH}	V_{CC} = MIN, V_{IL} = 0.8 V, V_{OH} = 5.5 V							0.25	mA
	V_{CC} = ″ ″, V_{IL} = 0.7 V, V_{OH} = 5.5 V				0.25				
V_{OL}	V_{CC} = ″ ″, V_{IH} = 2 V, I_{OL} = 20 mA				0.5			0.5	V
I_I	V_{CC} = MAX, V_I = 5.5 V				1			1	mA
I_{IH}	V_{CC} = MAX, V_I = 2.7 V				50			50	μA
I_{IL}	V_{CC} = MAX, V_I = 0.5 V				−2			−2	mA
I_{CCH}	V_{CC} = MAX, V_I = 0			6	13.2		6	13.2	mA
I_{CCL}	V_{CC} = MAX, V_I = 4.5 V			20	36		20	36	mA

†For conditions shown as MIN or MAX, use the appropriate value specified under recommended operating conditions.
‡All typical values are at V_{CC} = 5 V, T_A = 25°C.

switching characteristics, V_{CC} = 5 V, T_A = 25°C (see note 2)

PARAMETER	FROM (INPUT)	TO (OUTPUT)	TEST CONDITIONS	MIN	TYP	MAX	UNIT
t_{PLH}	A or B	Y	R_L = 280 Ω, C_L = 15 pF	2	5	7.5	ns
t_{PHL}				2	4.5	7	ns
t_{PLH}			R_L = 280 Ω, C_L = 50 pF		7.5		ns
t_{PHL}					7		ns

NOTE 2: Load circuits and voltage waveforms are shown in Section 1.

- Package Options Include Plastic "Small Outline" Packages, Ceramic Chip Carriers and Flat Packages, and Plastic and Ceramic DIPs
- Dependable Texas Instruments Quality and Reliability

description

These devices contain six independent inverters.

The SN5404, SN54LS04, and SN54S04 are characterized for operation over the full military temperature range of −55°C to 125°C. The SN7404, SN74LS04, and SN74S04 are characterized for operation from 0°C to 70°C.

FUNCTION TABLE (each inverter)

INPUTS A	OUTPUT Y
H	L
L	H

logic symbol†

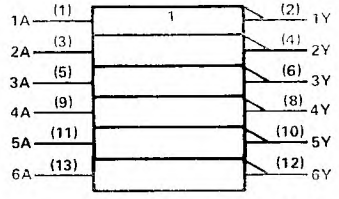

†This symbol is in accordance with ANSI/IEEE Std 91-1984 and IEC Publication 617-12.
Pin numbers shown are for D, J, and N packages.

logic diagram (positive logic)

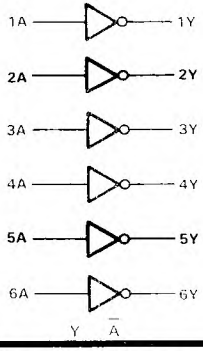

SN5404 . . . J PACKAGE
SN54LS04, SN54S04 . . . J OR W PACKAGE
SN7404 . . . N PACKAGE
SN74LS04, SN74S04 . . . D OR N PACKAGE
(TOP VIEW)

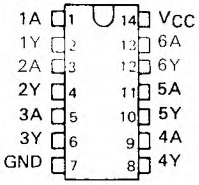

SN5404 . . . W PACKAGE
(TOP VIEW)

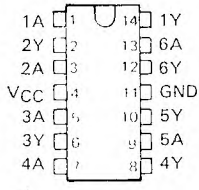

SN54LS04, SN54S04 . . . FK PACKAGE
(TOP VIEW)

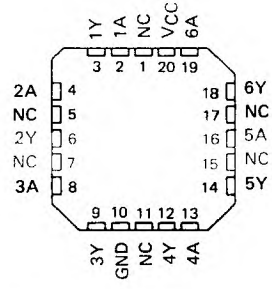

NC No internal connection

PRODUCTION DATA documents contain information current as of publication date. Products conform to specifications per the terms of Texas Instruments standard warranty. Production processing does not necessarily include testing of all parameters.

schematics (each gate)

'04

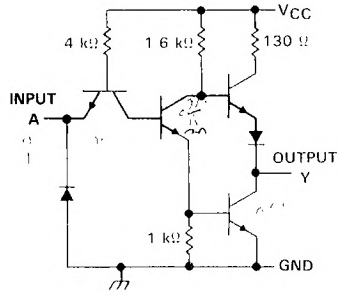

'LS04

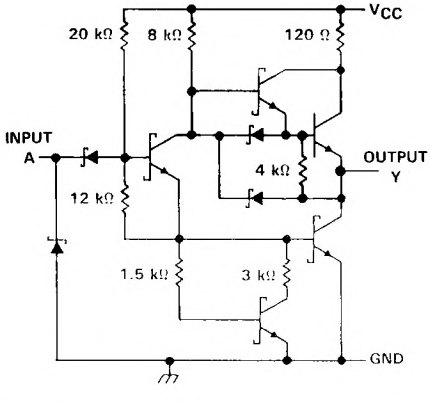

'S04

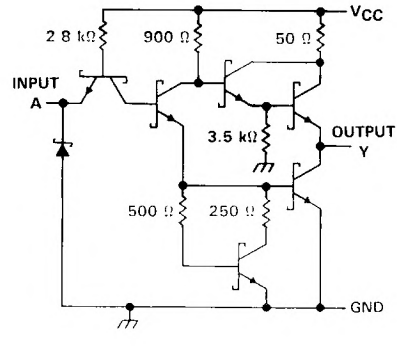

Resistor values shown are nominal.

absolute maximum ratings over operating free-air temperature range (unless otherwise noted)

Supply voltage, V_{CC} (see Note 1) . . . . . 7 V
Input voltage. '04, 'S04 . . . . . 5.5 V
'LS04 . . . . . 7 V
Operating free-air temperature range: SN54' . . . . . −55°C to 125°C
SN74' . . . . . 0°C to 70°C
Storage temperature range . . . . . −65°C to 150°C

NOTE 1: Voltage values are with respect to network ground terminal.

recommended operating conditions

		SN5404			SN7404			UNIT
		MIN	NOM	MAX	MIN	NOM	MAX	
V_{CC}	Supply voltage	4.5	5	5.5	4.75	5	5.25	V
V_{IH}	High-level input voltage	2			2			V
V_{IL}	Low-level input voltage			0.8			0.8	V
I_{OH}	High-level output current			−0.4			−0.4	mA
I_{OL}	Low-level output current			16			16	mA
T_A	Operating free-air temperature	−55		125	0		70	°C

electrical characteristics over recommended operating free-air temperature range (unless otherwise noted)

PARAMETER	TEST CONDITIONS†	SN5404			SN7404			UNIT
		MIN	TYP‡	MAX	MIN	TYP‡	MAX	
V_{IK}	V_{CC} = MIN, I_I = −12 mA			−1.5			−1.5	V
V_{OH}	V_{CC} = MIN, V_{IL} = 0.8 V, I_{OH} = −0.4 mA	2.4	3.4		2.4	3.4		V
V_{OL}	V_{CC} = MIN, V_{IH} = 2 V, I_{OL} = 16 mA		0.2	0.4		0.2	0.4	V
I_I	V_{CC} = MAX, V_I = 5.5 V			1			1	mA
I_{IH}	V_{CC} = MAX, V_I = 2.4 V			40			40	μA
I_{IL}	V_{CC} = MAX, V_I = 0.4 V			−1.6			−1.6	mA
I_{OS}§	V_{CC} = MAX	−20		−55	−18		−55	mA
I_{CCH}	V_{CC} = MAX, V_I = 0 V		6	12		6	12	mA
I_{CCL}	V_{CC} = MAX, V_I = 4.5 V		18	33		18	33	mA

† For conditions shown as MIN or MAX, use the appropriate value specified under recommended operating conditions.
‡ All typical values are at V_{CC} = 5 V, T_A = 25°C.
§ Not more than one output should be shorted at a time.

switching characteristics, V_{CC} = 5 V, T_A = 25°C (see note 2)

PARAMETER	FROM (INPUT)	TO (OUTPUT)	TEST CONDITIONS	MIN	TYP	MAX	UNIT
t_{PLH}	A	Y	R_L = 400 Ω, C_L = 15 pF		12	22	ns
t_{PHL}					8	15	ns

NOTE 2: Load circuits and voltage waveforms are shown in Section 1.

recommended operating conditions

		SN54LS04			SN74LS04			UNIT
		MIN	NOM	MAX	MIN	NOM	MAX	
V_{CC}	Supply voltage	4.5	5	5.5	4.75	5	5.25	V
V_{IH}	High-level input voltage	2			2			V
V_{IL}	Low-level input voltage			0.7			0.8	V
I_{OH}	High-level output current			−0.4			−0.4	mA
I_{OL}	Low-level output current			4			8	mA
T_A	Operating free-air temperature	−55		125	0		70	°C

electrical characteristics over recommended operating free-air temperature range (unless otherwise noted)

PARAMETER	TEST CONDITIONS †				SN54LS04			SN74LS04			UNIT
					MIN	TYP‡	MAX	MIN	TYP‡	MAX	
V_{IK}	V_{CC} = MIN,	I_I = −18 mA					−1.5			−1.5	V
V_{OH}	V_{CC} = MIN,	V_{IL} = MAX,	I_{OH} = −0.4 mA		2.5	3.4		2.7	3.4		V
V_{OL}	V_{CC} = MIN,	V_{IH} = 2 V,	I_{OL} = 4 mA			0.25	0.4			0.4	V
	V_{CC} = MIN,	V_{IH} = 2 V,	I_{OL} = 8 mA						0.25	0.5	
I_I	V_{CC} = MAX,	V_I = 7 V					0.1			0.1	mA
I_{IH}	V_{CC} = MAX,	V_I = 2.7 V					20			20	μA
I_{IL}	V_{CC} = MAX,	V_I = 0.4 V					−0.4			−0.4	mA
I_{OS}§	V_{CC} = MAX				−20		−100	−20		−100	mA
I_{CCH}	V_{CC} = MAX,	V_I = 0 V				1.2	2.4		1.2	2.4	mA
I_{CCL}	V_{CC} = MAX,	V_I = 4.5 V				3.6	6.6		3.6	6.6	mA

† For conditions shown as MIN or MAX, use the appropriate value specified under recommended operating conditions.
‡ All typical values are at V_{CC} = 5 V, T_A = 25°C.
§ Not more than one output should be shorted at a time, and the duration of the short-circuit should not exceed one second.

switching characteristics, V_{CC} = 5 V, T_A = 25°C (see note 2)

PARAMETER	FROM (INPUT)	TO (OUTPUT)	TEST CONDITIONS		MIN	TYP	MAX	UNIT
t_{PLH}	A	Y	R_L = 2 kΩ,	C_L = 15 pF		9	15	ns
t_{PHL}						10	15	ns

NOTE 2: Load circuits and voltage waveforms are shown in Section 1.

recommended operating conditions

		SN54S04			SN74S04			UNIT
		MIN	NOM	MAX	MIN	NOM	MAX	
V_{CC}	Supply voltage	4.5	5	5.5	4.75	5	5.25	V
V_{IH}	High-level input voltage	2			2			V
V_{IL}	Low-level input voltage			0.8			0.8	V
I_{OH}	High-level output current			−1			−1	mA
I_{OL}	Low-level output current			20			20	mA
T_A	Operating free-air temperature	−55		125	0		70	°C

electrical characteristics over recommended operating free-air temperature range (unless otherwise noted)

PARAMETER	TEST CONDITIONS †	SN54S04			SN74S04			UNIT
		MIN	TYP ‡	MAX	MIN	TYP ‡	MAX	
V_{IK}	V_{CC} = MIN, I_I = −18 mA			−1.2			−1.2	V
V_{OH}	V_{CC} = MIN, V_{IL} = 0.8 V, I_{OH} = −1 mA	2.5	3.4		2.7	3.4		V
V_{OL}	V_{CC} = MIN, V_{IH} = 2 V, I_{OL} = 20 mA			0.5			0.5	V
I_I	V_{CC} = MAX, V_I = 5.5 V			1			1	mA
I_{IH}	V_{CC} = MAX, V_I = 2.7 V			50			50	μA
I_{IL}	V_{CC} = MAX, V_I = 0.5 V			−2			−2	mA
I_{OS} §	V_{CC} = MAX	−40		−100	−40		−100	mA
I_{CCH}	V_{CC} = MAX, V_I = 0 V		15	24		15	24	mA
I_{CCL}	V_{CC} = MAX, V_I = 4.5 V		30	54		30	54	mA

† For conditions shown as MIN or MAX, use the appropriate value specified under recommended operating conditions.
‡ All typical values are at V_{CC} = 5 V, T_A = 25°C.
§ Not more than one output should be shorted at a time, and the duration of the short circuit should not exceed one second

switching characteristics, V_{CC} = 5 V, T_A = 25°C (see note 2)

PARAMETER	FROM (INPUT)	TO (OUTPUT)	TEST CONDITIONS	MIN	TYP	MAX	UNIT
t_{PLH}	A	Y	R_L = 280 Ω, C_L = 15 pF		3	4.5	ns
t_{PHL}					3	5	ns
t_{PLH}			R_L = 280 Ω, C_L = 50 pF		4.5		ns
t_{PHL}					5		ns

NOTE 2: Load circuits and voltage waveforms are shown in Section 1.

- **Package Option Includes Plastic "Small Outline" Packages, Ceramic Chip Carriers and Flat Packages, and Plastic and Ceramic DIPs**
- **Dependable Texas Instruments Quality and Reliability**

description

These devices contain six independent inverters. The open-collector outputs require pull-up resistors to perform correctly. They may be connected to other open-collector outputs to implement active-low wired-OR or active-high wired-AND functions. Open-collector devices are often used to generate high V_{OH} levels.

The SN5405, SN54LS05, and SN54S05 are characterized for operation over the full military temperature range of −55°C to 125°C. The SN7405, SN74LS05, and SN74S05 are characterized for operation from 0°C to 70°C.

FUNCTION TABLE (each inverter)

INPUT	OUTPUT
A	Y
H	L
L	H

logic diagram (positive logic)

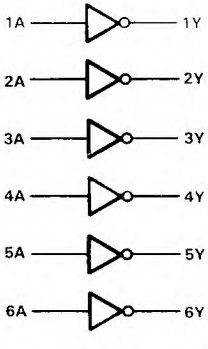

$Y = \overline{A}$

SN5405 . . . J PACKAGE
SN54LS05, SN54S05 . . . J OR W PACKAGE
SN7405 . . . N PACKAGE
SN74LS05, SN74S05 . . . D OR N PACKAGE
(TOP VIEW)

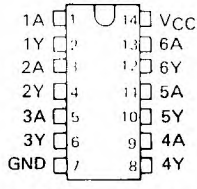

SN5405 . . . W PACKAGE
(TOP VIEW)

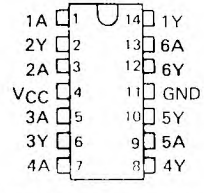

SN54LS05, SN54S05 . . . FK PACKAGE
(TOP VIEW)

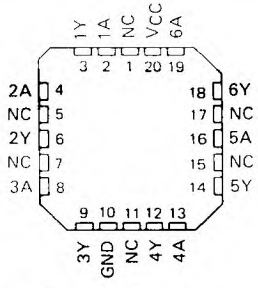

NC – No internal connection

logic symbol†

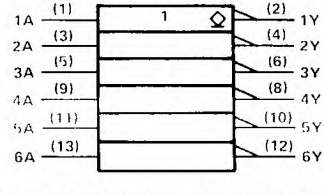

† This symbol is in accordance with ANSI/IEEE Std 91-1984 and IEC Publication 617-12.
Pin numbers shown are for D, J, N, and W packages.

PRODUCTION DATA documents contain information current as of publication date. Products conform to specifications per the terms of Texas Instruments standard warranty. Production processing does not necessarily include testing of all parameters.

schematics (each inverter)

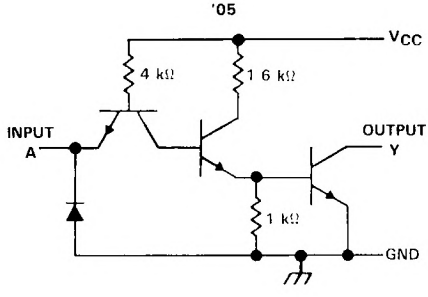

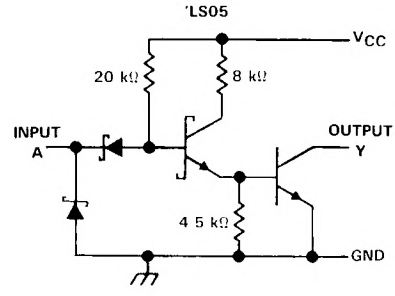

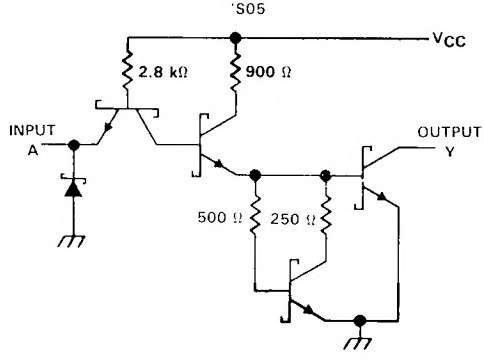

Resistor values are nominal

absolute maximum ratings over operating free-air temperature range (unless otherwise noted)

Supply voltage, V_{CC} (see Note 1): '05, 'LS05, 'S05 . . . . . 7 V
Input voltage: '05, 'S05 . . . . . 5.5 V
'LS05 . . . . . 7 V
Off-state output voltage . . . . . 7 V
Operating free-air temperature range: SN54' . . . . . −55°C to 125°C
SN74' . . . . . 0°C to 70°C
Storage temperature range . . . . . −65°C to 150°C

NOTE 1: Voltage values are with respect to network ground terminal.

TEXAS INSTRUMENTS
POST OFFICE BOX 655012 • DALLAS, TEXAS 75265

recommended operating conditions

	SN5405			SN7405			UNIT
	MIN	NOM	MAX	MIN	NOM	MAX	
V_{CC} Supply voltage	4.5	5	5.5	4.75	5	5.25	V
V_{IH} High-level input voltage	2			2			V
V_{IL} Low-level input voltage			0.8			0.8	V
V_{OH} High-level output voltage			5.5			5.5	V
I_{OL} Low-level output current			16			16	mA
T_A Operating free-air temperature	−55		125	0		70	°C

electrical characteristics over recommended operating free-air temperature range (unless otherwise noted)

PARAMETER	TEST CONDITIONS†			SN5405			SN7405			UNIT
				MIN	TYP‡	MAX	MIN	TYP‡	MAX	
V_{IK}	V_{CC} = ⋮⋮⋮	I_I = −12 mA				−1.5			−1.5	V
I_{OH}	V_{CC} = ⋮⋮⋮	V_{IL} = 0.8 V,	V_{OH} = 5.5 V						0.25	mA
	V_{CC} = ⋮⋮⋮	V_{IL} = 0.7 V,	V_{OH} = 5.5 V			0.25				
V_{OL}	V_{CC} = ⋮⋮⋮	V_{IH} = 2 V,	I_{OL} = 16 mA		0.2	0.4		0.2	0.4	V
I_I	V_{CC} = MAX,	V_I = 5.5 V				1			1	mA
I_{IH}	V_{CC} = MAX,	V_I = 2.4 V				40			40	μA
I_{IL}	V_{CC} = MAX,	V_I = 0.4 V				−1.6			−1.6	mA
I_{CCH}	V_{CC} = MAX,	V_I = 0			6	12		6	12	mA
I_{CCL}	V_{CC} = MAX,	V_I = 4.5 V			18	33		18	33	mA

† For conditions shown as MIN or MAX, use the appropriate value specified under recommended operating conditions
‡ All typical values are at V_{CC} = 5 V, T_A = 25°C

switching characteristics, V_{CC} = 5 V, T_A = 25°C (see note 2)

PARAMETER	FROM (INPUT)	TO (OUTPUT)	TEST CONDITIONS		MIN	TYP	MAX	UNIT
t_{PLH}	A	Y	R_L = 4 kΩ,	C_L = 15 pF		40	55	ns
t_{PHL}			R_L = 400 Ω,	C_L = 15 pF		8	15	ns

NOTE 2: Load circuits and voltage waveforms are shown in Section 1

recommended operating conditions

	SN54LS05			SN74LS05			UNIT
	MIN	NOM	MAX	MIN	NOM	MAX	
V_{CC} Supply voltage	4.5	5	5.5	4.75	5	5.25	V
V_{IH} High-level input voltage	2			2			V
V_{IL} Low-level input voltage			0.7			0.8	V
V_{OH} High-level output voltage			5.5			5.5	V
I_{OL} Low-level output current			4			8	mA
T_A Operating free-air temperature	−55		125	0		70	°C

electrical characteristics over recommended operating free-air temperature range (unless otherwise noted)

PARAMETER	TEST CONDITIONS†	SN54LS05			SN74LS05			UNIT
		MIN	TYP‡	MAX	MIN	TYP‡	MAX	
V_{IK}	V_{CC} = MIN, I_I = −18 mA			−1.5			−1.5	V
I_{OH}	V_{CC} = MIN, V_{IL} = MAX, V_{OH} = 5.5 V			0.1			0.1	mA
V_{OL}	V_{CC} = MIN, V_{IH} = 2 V, I_{OL} = 4 mA		0.25	0.4		0.25	0.4	V
	V_{CC} = MIN, V_{IH} = 2 V, I_{OL} = 8 mA					0.35	0.5	
I_I	V_{CC} = MAX, V_I = 7 V			0.1			0.1	mA
I_{IH}	V_{CC} = MAX, V_I = 2.7 V			20			20	μA
I_{IL}	V_{CC} = MAX, V_I = 0.4 V			−0.4			−0.4	mA
I_{CCH}	V_{CC} = MAX, V_I = 0		1.2	2.4		1.2	2.4	mA
I_{CCL}	V_{CC} = MAX, V_I = 4.5 V		3.6	6.6		3.6	6.6	mA

† For conditions shown as MIN or MAX, use the appropriate value specified under recommended operating conditions.
‡ All typical values are at V_{CC} = 5 V, T_A = 25°C.

switching characteristics, V_{CC} = 5 V, T_A = 25°C (see note 2)

PARAMETER	FROM (INPUT)	TO (OUTPUT)	TEST CONDITIONS	MIN	TYP	MAX	UNIT
t_{PLH}	A	Y	R_L = 2 kΩ, C_L = 15 pF		17	32	ns
t_{PHL}					15	28	ns

NOTE 2: Load circuits and voltage waveforms are shown in Section 1.

recommended operating conditions

	SN54S05			SN74S05			UNIT
	MIN	NOM	MAX	MIN	NOM	MAX	
V_{CC} Supply voltage	4.5	5	5.5	4.75	5	5.25	V
V_{IH} High-level input voltage	2			2			V
V_{IL} Low-level input voltage			0.8			0.8	V
V_{OH} High-level output voltage			5.5			5.5	V
I_{OL} Low-level output current			20			20	mA
T_A Operating free-air temperature	−55		125	0		70	°C

electrical characteristics over recommended operating free-air temperature range (unless otherwise noted)

PARAMETER	TEST CONDITIONS†			SN54S05			SN74S05			UNIT
				MIN	TYP‡	MAX	MIN	TYP‡	MAX	
V_{IK}	V_{CC} = MIN,	I_I = −18 mA				−1.2			−1.2	V
I_{OH}	V_{CC} = MIN,	V_{IL} = 0.8 V,	V_{OH} = 5.5 V						0.25	mA
	V_{CC} = MIN,	V_{IL} = 0.7 V,	V_{OH} = 5.5 V			0.25				
V_{OL}	V_{CC} = MIN,	V_{IH} = 2 V,	I_{OL} = 20 mA			0.5			0.5	V
I_I	V_{CC} = MAX,	V_I = 5.5 V				1			1	mA
I_{IH}	V_{CC} = MAX,	V_I = 2.7 V				50			50	μA
I_{IL}	V_{CC} = MAX,	V_I = 0.5 V				−2			−2	mA
I_{CCH}	V_{CC} = MAX,	V_I = 0			9	19.8		9	19.8	mA
I_{CCL}	V_{CC} = MAX,	V_I = 4.5 V			30	54		30	54	mA

† For conditions shown as MIN or MAX, use the appropriate value specified under recommended operating conditions.
‡ All typical values are at V_{CC} = 5 V, T_A = 25°C

switching characteristics, V_{CC} = 5 V, T_A = 25°C (see note 2)

PARAMETER	FROM (INPUT)	TO (OUTPUT)	TEST CONDITIONS	MIN	TYP	MAX	UNIT
t_{PLH}	A	Y	R_L = 280 Ω, C_L = 15 pF	2	5	7.5	ns
t_{PHL}				2	4.5	7	ns
t_{PLH}			R_L = 280 Ω, C_L = 50 pF		7.5		ns
t_{PHL}					7		ns

NOTE 2: Load circuits and voltage waveforms are shown in Section 1.

- **Converts TTL Voltage Levels to MOS Levels**
- **High Sink-Current Capability**
- **Input Clamping Diodes Simplify System Design**
- **Open-Collector Driver for Indicator Lamps and Relays**
- **Inputs Fully Compatible with Most TTL Circuits**

SN5406, SN5416 . . . J OR W PACKAGE
SN7406, SN7416 . . . N PACKAGE
(TOP VIEW)

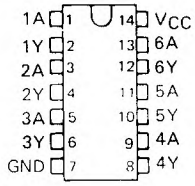

description

These monolithic TTL hex inverter buffers/drivers feature high-voltage open-collector outputs for interfacing with high-level circuits (such as MOS), or for driving high-current loads (such as lamps or relays), and are also characterized for use as inverter buffers for driving TTL inputs. The SN5406 and SN7406 have minimum breakdown voltages of 30 volts and the SN5416 and SN7416 have minimum breakdown voltages of 15 volts. The maximum sink current is 30 milliamperes for the SN5406 and SN5416, and 40 milliamperes for the SN7406 and SN7416.

logic symbol†

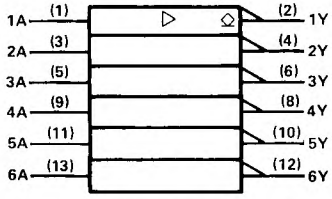

† This symbol is in accordance with ANSI/IEEE Std 91-1984 and IEC Publication 617-12

logic diagram (positive logic)

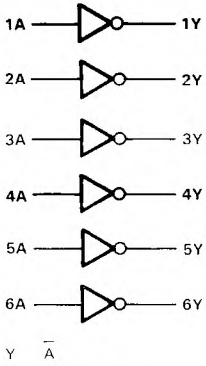

$Y = \overline{A}$

schematic

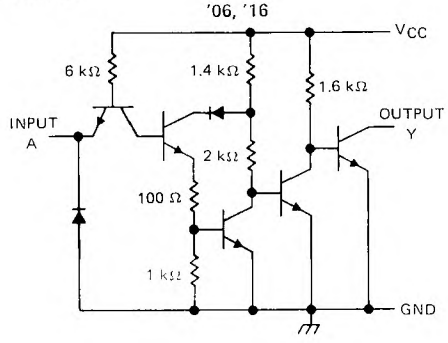

Resistor values shown are nominal.

absolute maximum ratings over operating free-air temperature range (unless otherwise noted)

Supply voltage, V_{CC} (see Note 1) . . . . . 7 V
Input voltage (see Note 1) . . . . . 5.5 V
Output voltage (see Notes 1 and 2): SN5406, SN7406 Circuits . . . . . 30 V
SN5416, SN7416 Circuits . . . . . 15 V
Operating free-air temperature range: SN5406, SN5416 Circuits . . . . . −55°C to 125°C
SN7406, SN7416 Circuits . . . . . 0°C to 70°C
Storage temperature range . . . . . −65°C to 150°C

NOTES: 1. Voltage values are with respect to network ground terminal.
2. This is the maximum voltage which should be applied to any output when it is in the off state.

recommended operating conditions

			SN5406 SN5416			SN7406 SN7416			UNIT
			MIN	NOM	MAX	MIN	NOM	MAX	
V_{CC}	Supply voltage		4.5	5	5.5	4.75	5	5.25	V
V_{IH}	High-level input voltage		2			2			V
V_{IL}	Low-level input voltage				0.8			0.8	V
V_{OH}	High-level output voltage	'06			30			30	V
		'16			15			15	
I_{OL}	Low-level output current				30			40	mA
T_A	Operating free-air temperature		−55		125	0		70	°C

electrical characteristics over recommended operating free-air temperature range (unless otherwise noted)

PARAMETER	TEST CONDITIONS†		SN5406 SN5416			SN7406 SN7416			UNIT
			MIN	TYP‡	MAX	MIN	TYP‡	MAX	
V_{IK}	V_{CC} = MIN, I_I = −12 mA				−1.5			−1.5	V
I_{OH}	V_{CC} = MIN, V_{IL} = 0.8 V, V_{OH} = §				0.25			0.25	mA
V_{OL}	V_{CC} = MIN, V_{IH} = 2 V	I_{OL} = 16 mA			0.4			0.4	V
		I_{OL} = ¶			0.7			0.7	
I_I	V_{CC} = MAX, V_I = 5.5 V				1			1	mA
I_{IH}	V_{CC} = MAX, V_{IH} = 2.4 V				40			40	μA
I_{IL}	V_{CC} = MAX, V_{IL} = 0.4 V				−1.6			−1.6	mA
I_{CCH}	V_{CC} = MAX			30	48		30	48	mA
I_{CCL}	V_{CC} = MAX			32	51		32	51	mA

† For conditions shown as MIN or MAX, use the appropriate value specified under recommended operating conditions.
‡ All typical values are at V_{CC} = 5 V, T_A = 25°C.
§ V_{OH} = 30 V for '06 and 15 V for '16.
¶ I_{OL} = 30 mA for SN54' and 40 mA for SN74'

switching characteristics, V_{CC} = 5 V, T_A = 25°C (see note 3)

PARAMETER	FROM (INPUT)	TO (OUTPUT)	TEST CONDITIONS	MIN	TYP	MAX	UNIT
t_{PLH}	A	Y	R_L = 110 Ω, C_L = 15 pF		10	15	ns
t_{PHL}					15	23	ns

NOTE 3: Load circuits and voltage waveforms are shown in Section 1.

DECEMBER 1983 - REVISED MARCH 1988

- **Converts TTL Voltage Levels to MOS Levels**
- **High Sink-Current Capability**
- **Input Clamping Diodes Simplify System Design**
- **Open-Collector Driver for Indicator Lamps and Relays**
- **Inputs Fully Compatible with Most TTL Circuits**

SN5407, SN5417 . . . J OR W PACKAGE
SN7407, SN7417 . . . N PACKAGE
(TOP VIEW)

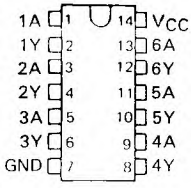

description

These monolithic TTL hex buffers/drivers feature high-voltage open-collector outputs for interfacing with high-level circuits (such as MOS), or for driving high-current loads (such as lamps or relays), and are also characterized for use as buffers for driving TTL inputs. The SN5407 and SN7407 have minimum breakdown voltages of 30 volts and the SN5417 and SN7417 have minimum breakdown voltages of 15 volts. The maximum sink current is 30 milliamperes for the SN5407 and SN5417, and 40 milliamperes for the SN7407 and SN7417.

These circuits are completely compatible with most TTL families. Inputs are diode-clamped to minimize transmission-line effects which simplifies design. Typical power dissipation is 145 milliwatts and average propagation delay time is 14 nanoseconds. The SN5407 and SN5417 are characterized for operation over the full military temperature range of −55° C to 125° C; the SN7407 and SN7417 are characterized for operation from 0° C to 70° C.

logic symbol†

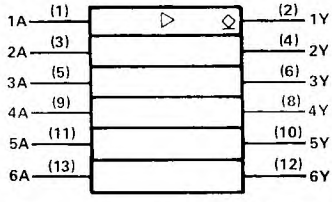

† This symbol is in accordance with ANSI/IEEE Std 91-1984 and IEC Publication 617-12.

schematic

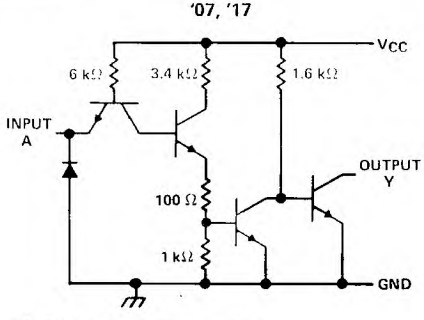

Resistor values shown are nominal.

logic diagram (positive logic)

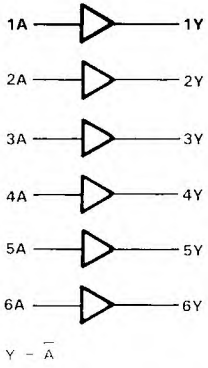

$Y = \overline{A}$

PRODUCTION DATA documents contain information current as of publication date. Products conform to specifications per the terms of Texas Instruments standard warranty. Production processing does not necessarily include testing of all parameters.

absolute maximum ratings over operating free-air temperature range (unless otherwise noted)

Supply voltage V_{CC} (see Note 1) . . . . . 7 V
Input voltage (see Note 1) . . . . . 5.5 V
Output voltage (see Notes 1 and 2): SN5407, SN7407 Circuits . . . . . 30 V
SN5417, SN7417 Circuits . . . . . 15 V
Operating free-air temperature range: SN5407, SN5417 Circuits . . . . . −55°C to 125°C
SN7407, SN7417 Circuits . . . . . 0°C to 70°C
Storage temperature range . . . . . −65°C to 150°C

NOTES: 1. Voltage values are with respect to network ground terminal.
2. This is the maximum voltage which should be applied to any output when it is in the off state.

recommended operating conditions

		SN5407 SN5417			SN7407 SN7417			UNIT
		MIN	NOM	MAX	MIN	NOM	MAX	
V_{CC} Supply voltage		4.5	5	5.5	4.75	5	5.25	V
V_{IH} High-level input voltage		2			2			V
V_{IL} Low-level input voltage				0.8			0.8	V
V_{OH} High-level output voltage	'07			30			30	V
	'17			15			15	
I_{OL} Low-level output current				30			40	mA
T_A Operating free-air temperature		−55		125	0		70	°C

electrical characteristics over recommended operating free-air temperature range (unless otherwise noted)

PARAMETER	TEST CONDITIONS†		SN5407 SN5417			SN7407 SN7417			UNIT
			MIN	TYP‡	MAX	MIN	TYP‡	MAX	
V_{IK}	V_{CC} = MIN, I_I = −12 mA				−1.5			−1.5	V
I_{OH}	V_{CC} = MIN, V_{IL} = 0.8 V, V_{OH} = §				0.25			0.25	mA
V_{OL}	V_{CC} = MIN, V_{IH} = 2 V	I_{OL} = 16 mA			0.4			0.4	V
		I_{OL} = ¶			0.7			0.7	
I_I	V_{CC} = MAX, V_I = 5.5 V				1			1	mA
I_{IH}	V_{CC} = MAX, V_{IH} = 2.4 V				40			40	μA
I_{IL}	V_{CC} = MAX, V_{IL} = 0.4 V				−1.6			−1.6	mA
I_{CCH}	V_{CC} = MAX			29	41		29	41	mA
I_{CCL}	V_{CC} = MAX			21	30		21	30	mA

† For conditions shown as MIN or MAX, use the appropriate value specified under recommended operating conditions.
‡ All typical values are at V_{CC} = 5 V, T_A = 25°C.
§ V_{OH} = 30 V for '07 and 15 V for '17.
¶ I_{OL} = 30 mA for SN54' and 40 mA for SN74'.

switching characteristics, V_{CC} = 5 V, T_A = 25°C (see Note 3)

PARAMETER	FROM (INPUT)	TO (OUTPUT)	TEST CONDITIONS	MIN	TYP	MAX	UNIT
t_{PLH}	A	Y	R_L = 110 Ω, C_L = 15 pF		6	15	ns
t_{PHL}					20	26	
t_{PLH}	A	Y	R_L = 150 Ω, C_L = 50 pF			15	ns
t_{PHL}						26	

NOTE 3: Load circuits and voltage waveforms are shown in Section 1.

TEXAS INSTRUMENTS
POST OFFICE BOX 655012 • DALLAS, TEXAS 75265

- **Package Options Include Plastic "Small Outline" Packages, Ceramic Chip Carriers and Flat Packages, and Plastic and Ceramic DIPs**
- **Dependable Texas Instruments Quality and Reliability**

description

These devices contain four independent 2-input AND gates.

The SN5408, SN54LS08, and SN54S08 are characterized for operation over the full military temperature range of −55°C to 125°C. The SN7408, SN74LS08 and SN74S08 are characterized for operation from 0° to 70°C.

FUNCTION TABLE (each gate)

INPUTS		OUTPUT
A	B	Y
H	H	H
L	X	L
X	L	L

logic symbol†

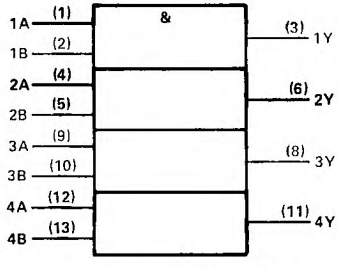

† This symbol is in accordance with ANSI/IEEE Std 91-1984 and IEC Publication 617-12.

Pin numbers shown are for D, J, N, and W packages.

SN5408, SN54LS08, SN54S08 . . . J OR W PACKAGE
SN7408 . . . J OR N PACKAGE
SN74LS08, SN74S08 . . . D, J OR N PACKAGE
(TOP VIEW)

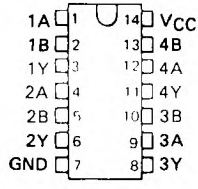

SN54LS08, SN54S08 . . . FK PACKAGE
(TOP VIEW)

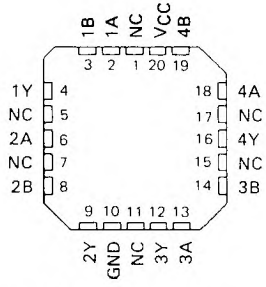

NC – No internal connection

logic diagram (positive logic)

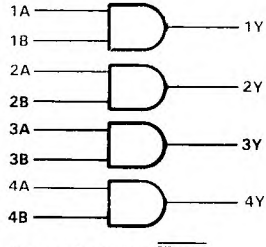

$Y = A \cdot B$ or $Y = \overline{\overline{A} + \overline{B}}$

PRODUCTION DATA documents contain information current as of publication date. Products conform to specifications per the terms of Texas Instruments standard warranty. Production processing does not necessarily include testing of all parameters.

schematics (each gate)

'08

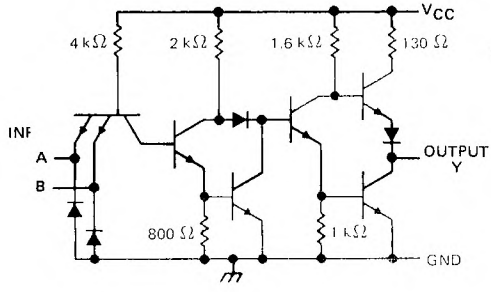

'LS08

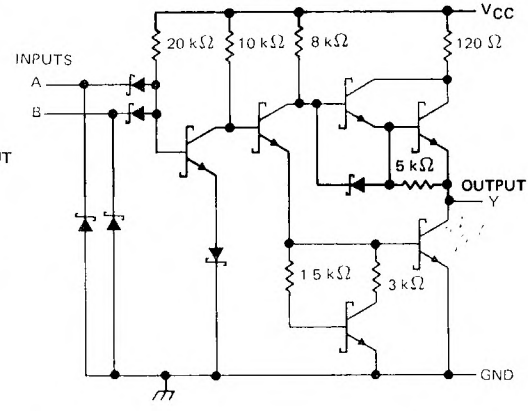

'S08

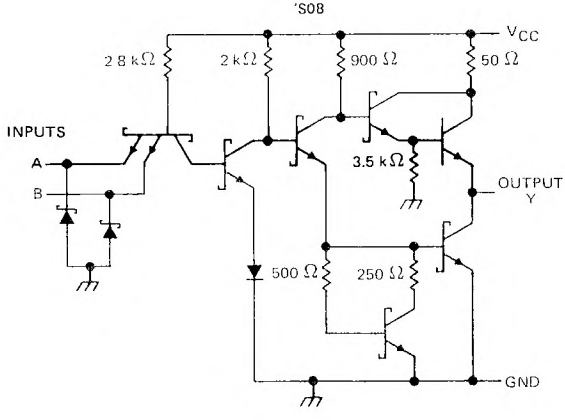

Resistor values are nominal.

absolute maximum ratings over operating free-air temperature range (unless otherwise noted)

Supply voltage, V_{CC} (see Note 1)	7 V
Input voltage: '08, 'S08	5.5 V
'LS08	7 V
Operating free-air temperature range: SN54'	−55°C to 125°C
SN74'	0°C to 70°C
Storage temperature range	−65°C to 150°C

NOTE 1: Voltage values are with respect to network ground terminal.

TEXAS INSTRUMENTS
POST OFFICE BOX 655012 • DALLAS, TEXAS 75265

recommended operating conditions

	SN5408			SN7408			UNIT
	MIN	NOM	MAX	MIN	NOM	MAX	
V_{CC} Supply voltage	4.5	5	5.5	4.75	5	5.25	V
V_{IH} High-level input voltage	2			2			V
V_{IL} Low-level input voltage			0.8			0.8	V
I_{OH} High-level output current			−0.8			−0.8	mA
I_{OL} Low-level output current			16			16	mA
T_A Operating free-air temperature	−55		125	0		70	°C

electrical characteristics over recommended operating free-air temperature range (unless otherwise noted)

PARAMETER	TEST CONDITIONS†	SN5408			SN7408			UNIT
		MIN	TYP‡	MAX	MIN	TYP‡	MAX	
V_{IK}	V_{CC} = MIN, I_I = −12 mA			−1.5			−1.5	V
V_{OH}	V_{CC} = MIN, V_{IH} = 2 V, I_{OH} = −0.8 mA	2.4	3.4		2.4	3.4		V
V_{OL}	V_{CC} = MIN, V_{IL} = 0.8 V, I_{OL} = 16 mA		0.2	0.4		0.2	0.4	V
I_I	V_{CC} = MAX, V_I = 5.5 V			1			1	mA
I_{IH}	V_{CC} = MAX, V_I = 2.4 V			40			40	μA
I_{IL}	V_{CC} = MAX, V_I = 0.4 V			−1.6			−1.6	mA
I_{OS}§	V_{CC} = MAX	−20		−55	−18		−55	mA
I_{CCH}	V_{CC} = MAX, V_I = 4.5 V		11	21		11	21	mA
I_{CCL}	V_{CC} = MAX, V_I = 0 V		20	33		20	33	mA

† For conditions shown as MIN or MAX, use the appropriate value specified under recommended operating conditions.
‡ All typical values are at V_{CC} = 5 V, T_A = 25°C.
§ Not more than one output should be shorted at a time.

switching characteristics, V_{CC} = 5 V, T_A = 25°C (see note 2)

PARAMETER	FROM (INPUT)	TO (OUTPUT)	TEST CONDITIONS	MIN	TYP	MAX	UNIT
t_{PLH}	A or B	Y	R_L = 400 Ω, C_L = 15 pF		17.5	27	ns
t_{PHL}					12	19	ns

NOTE 2: Load circuits and voltage waveforms are shown in Section 1.

recommended operating conditions

		SN54LS08			SN74LS08			UNIT
		MIN	NOM	MAX	MIN	NOM	MAX	
V_{CC}	Supply voltage	4.5	5	5.5	4.75	5	5.25	V
V_{IH}	High-level input voltage	2			2			V
V_{IL}	Low-level input voltage			0.7			0.8	V
I_{OH}	High-level output current			−0.4			−0.4	mA
I_{OL}	Low-level output current			4			8	mA
T_A	Operating free-air temperature	−55		125	0		70	°C

electrical characteristics over recommended operating free-air temperature range (unless otherwise noted)

PARAMETER	TEST CONDITIONS †			SN54LS08			SN74LS08			UNIT
				MIN	TYP‡	MAX	MIN	TYP‡	MAX	
V_{IK}	V_{CC} = MIN,	I_I = −18 mA				−1.5			−1.5	V
V_{OH}	V_{CC} = MIN,	V_{IH} = 2 V,	I_{OH} = −0.4 mA	2.5	3.4		2.7	3.4		V
V_{OL}	V_{CC} = MIN,	V_{IL} = MAX,	I_{OL} = 4 mA		0.25	0.4		0.25	0.4	V
	V_{CC} = MIN,	V_{IL} = MAX,	I_{OL} = 8 mA					0.35	0.5	
I_I	V_{CC} = MAX,	V_I = 7 V				0.1			0.1	mA
I_{IH}	V_{CC} = MAX,	V_I = 2.7 V				20			20	μA
I_{IL}	V_{CC} = MAX,	V_I = 0.4 V				−0.4			−0.4	mA
I_{OS}§	V_{CC} = MAX			−20		−100	−20		−100	mA
I_{CCH}	V_{CC} = MAX,	V_I = 4.5 V			2.4	4.8		2.4	4.8	mA
I_{CCL}	V_{CC} = MAX,	V_I = 0 V			4.4	8.8		4.4	8.8	mA

† For conditions shown as MIN or MAX, use the appropriate value specified under recommended operating conditions.
‡ All typical values are at V_{CC} = 5 V, T_A = 25°C
§ Not more than one output should be shorted at a time, and the duration of the short-circuit should not exceed one second.

switching characteristics, V_{CC} = 5 V, T_A = 25°C (see note 2)

PARAMETER	FROM (INPUT)	TO (OUTPUT)	TEST CONDITIONS	MIN	TYP	MAX	UNIT
t_{PLH}	A or B	Y	R_L = 2 kΩ, C_L = 15 pF		8	15	ns
t_{PHL}					10	20	ns

NOTE 2: Load circuits and voltage waveforms are shown in Section 1.

TEXAS INSTRUMENTS
POST OFFICE BOX 655012 • DALLAS, TEXAS 75265

recommended operating conditions

		SN54S08			SN74S08			UNIT
		MIN	NOM	MAX	MIN	NOM	MAX	
V_{CC}	Supply voltage	4.5	5	5.5	4.75	5	5.25	V
V_{IH}	High-level input voltage	2			2			V
V_{IL}	Low-level input voltage			0.8			0.8	V
I_{OH}	High-level output current			−1			−1	mA
I_{OL}	Low-level output current			20			20	mA
T_A	Operating free-air temperature	−55		125	0		70	°C

electrical characteristics over recommended operating free-air temperature range (unless otherwise noted)

PARAMETER	TEST CONDITIONS †				SN54S08			SN74S08			UNIT
					MIN	TYP‡	MAX	MIN	TYP‡	MAX	
V_{IK}	V_{CC} = MIN,	I_I = −18 mA					−1.2			−1.2	V
V_{OH}	V_{CC} = MIN,	V_{IH} = 2 V,	I_{OH} = −1 mA		2.5	3.4		2.7	3.4		V
V_{OL}	V_{CC} = MIN,	V_{IL} = 0.8 V	I_{OL} = 20 mA				0.5			0.5	V
I_I	V_{CC} = MAX,	V_I = 5.5 V					1			1	mA
I_{IH}	V_{CC} = MAX,	V_I = 2.7 V					50			50	μA
I_{IL}	V_{CC} = MAX,	V_I = 0.5 V					−2			−2	mA
I_{OS}§	V_{CC} = MAX				−40		−100	−40		−100	mA
I_{CCH}	V_{CC} = MAX,	V_I = 4.5 V				18	32		18	32	mA
I_{CCL}	V_{CC} = MAX,	V_I = 0 V				32	57		32	57	mA

† For conditions shown as MIN or MAX, use the appropriate value specified under recommended operating conditions.
‡ All typical values are at V_{CC} = 5 V, T_A = 25°C.
§ Not more than one output should be shorted at a time, and the duration of the short-circuit should not exceed one second.

switching characteristics, V_{CC} = 5 V, T_A = 25°C (see note 2)

PARAMETER	FROM (INPUT)	TO (OUTPUT)	TEST CONDITIONS		MIN	TYP	MAX	UNIT
t_{PLH}	A or B	Y	R_L = 280 Ω,	C_L = 15 pF		4.5	7	ns
t_{PHL}						5	7.5	ns
t_{PLH}			R_L = 280 Ω,	C_L = 50 pF		6		ns
t_{PHL}						7.5		ns

NOTE 2: Load circuits and voltage waveforms are shown in Section 1.

QUADRUPLE 2-INPUT POSITIVE-AND GATES WITH OPEN-COLLECTOR OUTPUTS

DECEMBER 1983—REVISED MARCH 1988

- **Package Options Include Plastic "Small Outline" Packages, Ceramic Chip Carriers and Flat Packages, and Plastic and Ceramic DIPs**
- **Dependable Texas Instruments Quality and Reliability**

description

These devices contain four independent 2-input AND gates. The open-collector outputs require pull-up resistors to perform correctly. They may be connected to other open-collector outputs to implement active-low wired-OR or active-high wired-AND functions. Open-collector devices are often used to generate higher V_{OH} levels.

The SN5409, SN54LS09, and SN54S09 are characterized for operation over the full military temperature range of −55°C to 125°C. The SN7409, SN74LS09, and SN74S09 are characterized for operation from 0°C to 70°C.

FUNCTION TABLE (each gate)

INPUTS		OUTPUT
A	B	Y
H	H	H
L	X	L
X	L	L

SN5409, SN54LS09, SN54S09 . . . J OR W PACKAGE
SN7409 . . . N PACKAGE
SN74LS09, SN74S09 . . . D OR N PACKAGE
(TOP VIEW)

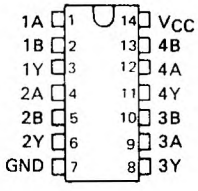

SN54LS09, SN54S09 . . . FK PACKAGE
(TOP VIEW)

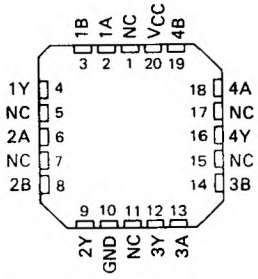

NC—No internal connection

logic symbol

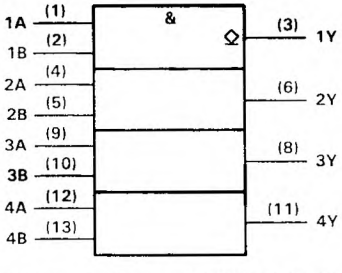

† This symbol is in accordance with ANSI/IEEE Std 91-1984 and IEC Publication 617-12.

Pin numbers shown are for D, J, N, and W packages

logic diagram (positive logic)

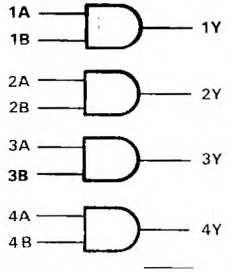

Y = A·B or Y = $\overline{\overline{A} + \overline{B}}$

PRODUCTION DATA documents contain information current as of publication date. Products conform to specifications per the terms of Texas Instruments standard warranty. Production processing does not necessarily include testing of all parameters.

schematics (each gate)

'09

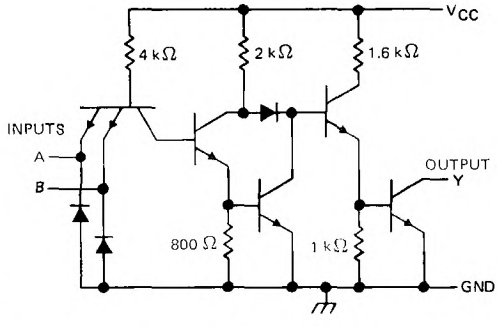

'LS09

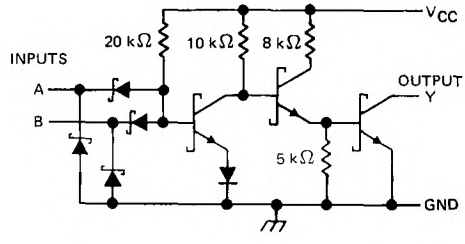

'S09

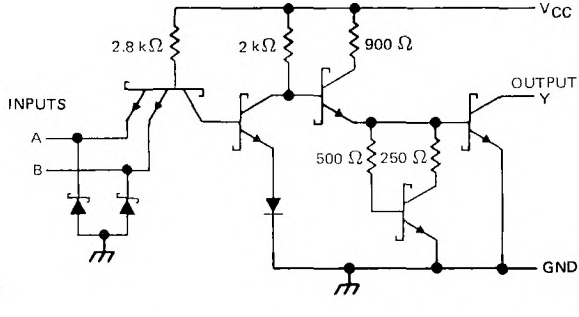

Resistor values shown are nominal.

absolute maximum ratings over operating free-air temperature range (unless otherwise noted)

Supply voltage, V_{CC} (see Note 1)	7 V
Input voltage: '09, 'S09	5.5 V
'LS09	7 V
Off-state output voltage	7 V
Operating free-air temperature range: SN54'	−55°C to 125°C
SN74'	0°C to 70°C
Storage temperature range	−65°C to 150°C

NOTE 1: Voltage values are with respect to network ground terminal.

recommended operating conditions

	SN5409			SN7409			UNIT
	MIN	NOM	MAX	MIN	NOM	MAX	
V_{CC} Supply voltage	4.5	5	5.5	4.75	5	5.25	V
V_{IH} High-level input voltage	2			2			V
V_{IL} Low-level input voltage			0.8			0.8	V
V_{OH} High-level output voltage			5.5			5.5	V
I_{OL} Low-level output current			16			16	mA
T_A Operating free-air temperature	− 55		125	0		70	°C

electrical characteristics over recommended operating free-air temperature range (unless otherwise noted)

PARAMETER	TEST CONDITIONS†	MIN	TYP‡	MAX	UNIT
V_{IK}	V_{CC} = MIN, I_I = − 12 mA			− 1.5	V
I_{OH}	V_{CC} = MIN, V_{IH} = 2 V, V_{OH} = 5.5 V			0.25	mA
V_{OL}	V_{CC} = MIN, V_{IL} = 0.8 V I_{OL} = 16 mA		0.2	0.4	V
I_I	V_{CC} = MAX, V_I = 5.5 V			1	mA
I_{IH}	V_{CC} = MAX, V_I = 2.4 V			40	μA
I_{IL}	V_{CC} = MAX, V_I = 0.4 V			− 1.6	mA
I_{CCH}	V_{CC} = MAX, V_I = 4.5 V		11	21	mA
I_{CCL}	V_{CC} = MAX, V_I = 0 V		20	33	mA

† For conditions shown as MIN or MAX, use the appropriate value specified under recommended operating conditions.
‡ All typical values are at V_{CC} = 5 V, T_A = 25°C.

switching characteristics, V_{CC} = 5 V, T_A = 25°C (see note 2)

PARAMETER	FROM (INPUT)	TO (OUTPUT)	TEST CONDITIONS	MIN	TYP	MAX	UNIT
t_{PLH}	A or B	Y	R_L = 400 Ω, C_L = 15 pF		21	32	ns
t_{PHL}					16	24	ns

NOTE 2: Load circuits and voltage waveforms are shown in Section 1.

recommended operating conditions

	SN54LS09			SN74LS09			UNIT
	MIN	NOM	MAX	MIN	NOM	MAX	
V_{CC} Supply voltage	4.5	5	5.5	4.75	5	5.25	V
V_{IH} High-level input voltage	2			2			V
V_{IL} Low-level input voltage			0.7			0.8	V
V_{OH} High-level output voltage			5.5			5.5	V
I_{OL} Low-level output current			4			8	mA
T_A Operating free-air temperature	−55		125	0		70	°C

electrical characteristics over recommended operating free-air temperature range (unless otherwise noted)

PARAMETER	TEST CONDITIONS†	SN54LS09			SN74LS09			UNIT
		MIN	TYP‡	MAX	MIN	TYP‡	MAX	
V_{IK}	V_{CC} = MIN, I_I = −18 mA			−1.5			−1.5	V
I_{OH}	V_{CC} = MIN, V_{IH} = 2 V, V_{OH} = 5.5 V			0.1			0.1	mA
V_{OL}	V_{CC} = MIN, V_{IL} = MAX, I_{OL} = 4 mA		0.25	0.4		0.25	0.4	V
	V_{CC} = MIN, V_{IL} = MAX, I_{OL} = 8 mA					0.35	0.5	
I_I	V_{CC} = MAX, V_I = 7 V			0.1			0.1	mA
I_{IH}	V_{CC} = MAX, V_I = 2.7 V			20			20	μA
I_{IL}	V_{CC} = MAX, V_I = 0.4 V			−0.4			−0.4	mA
I_{CCH}	V_{CC} = MAX, V_I = 4.5 V		2.4	4.8		2.4	4.8	mA
I_{CCL}	V_{CC} = MAX, V_I = 0 V		4.4	8.8		4.4	8.8	mA

† For conditions shown as MIN or MAX, use the appropriate value specified under recommended operating conditions.
‡ All typical values are at V_{CC} = 5 V, T_A = 25°C.

switching characteristics, V_{CC} = 5 V, T_A = 25°C (see note 2)

PARAMETER	FROM (INPUT)	TO (OUTPUT)	TEST CONDITIONS	MIN	TYP	MAX	UNIT
t_{PLH}	A or B	Y	R_L = 2 kΩ, C_L = 15 pF		20	35	ns
t_{PHL}					17	35	ns

NOTE 2: Load circuits and voltage waveforms are shown in Section 1.

TEXAS INSTRUMENTS
POST OFFICE BOX 655012 • DALLAS, TEXAS 75265

recommended operating conditions

	SN54S09			SN74S09			UNIT
	MIN	NOM	MAX	MIN	NOM	MAX	
V_{CC} Supply voltage	4.5	5	5.5	4.75	5	5.25	V
V_{IH} High-level input voltage	2			2			V
V_{IL} Low-level input voltage			0.8			0.8	V
V_{OH} High-level output voltage			5.5			5.5	V
I_{OL} Low-level output current			20			20	mA
T_A Operating free-air temperature	−55		125	0		70	°C

electrical characteristics over recommended operating free-air temperature range (unless otherwise noted)

PARAMETER	TEST CONDITIONS†	MIN	TYP‡	MAX	UNIT
V_{IK}	V_{CC} = MIN, I_I = −18 mA			−1.2	V
I_{OH}	V_{CC} = MIN, V_{IH} = 2 V, V_{OH} = 5.5 V			0.25	mA
V_{OL}	V_{CC} = MIN, V_{IL} = 0.8 V, I_{OL} = 20 mA			0.5	V
I_I	V_{CC} = MAX, V_I = 5.5 V			1	mA
I_{IH}	V_{CC} = MAX, V_I = 2.7 V			50	μA
I_{IL}	V_{CC} = MAX, V_I = 0.5 V			−2	mA
I_{CCH}	V_{CC} = MAX, V_I = 4.5 V		18	32	mA
I_{CCL}	V_{CC} = MAX,. V_I = 0 V		32	57	mA

† For conditions shown as MIN or MAX, use the appropriate value specified under recommended operating conditions.
‡ All typical values are at V_{CC} = 5 V, T_A = 25°C.

switching characteristics, V_{CC} = 5 V, T_A = 25°C (see note 2)

PARAMETER	FROM (INPUT)	TO (OUTPUT)	TEST CONDITIONS	MIN	TYP	MAX	UNIT
t_{PLH}	A or B	Y	R_L = 280 Ω, C_L = 15 pF		6.5	10	ns
t_{PHL}					6.5	10	ns
t_{PLH}			R_L = 280 Ω, C_L = 50 pF		9		ns
t_{PHL}					9		ns

NOTE 2: Load circuits and voltage waveforms are shown in Section 1.

- **Package Options Include Plastic "Small Outline" Packages, Ceramic Chip Carriers and Flat Packages, and Plastic and Ceramic DIPs**
- **Dependable Texas Instruments Quality and Reliability**

description

These devices contain three independent 3-input NAND gates.

The SN5410, SN54LS10, and SN54S10 are characterized for operation over the full military temperature range of −55°C to 125°C. The SN7410, SN74LS10, and SN74S10 are characterized for operation from 0°C to 70°C.

FUNCTION TABLE (each gate)

INPUTS			OUTPUT
A	B	C	Y
H	H	H	L
L	X	X	H
X	L	X	H
X	X	L	H

logic symbol†

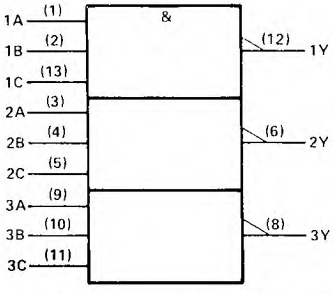

†This symbol is in accordance with ANSI/IEEE Std. 91-1984 and IEC Publication 617-12.
Pin numbers shown are for D, J, and N packages.

positive logic

$$Y = \overline{A \cdot B \cdot C} \text{ or } Y = \overline{A} + \overline{B} + \overline{C}$$

SN5410 . . . J PACKAGE
SN54LS10, SN54S10 . . . J OR W PACKAGE
SN7410 . . . N PACKAGE
SN74LS10, SN74S10 . . . D OR N PACKAGE
(TOP VIEW)

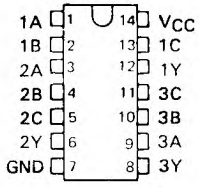

SN5410 . . . W PACKAGE
(TOP VIEW)

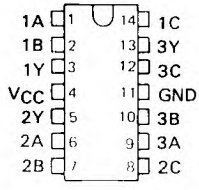

SN54LS10, SN54S10 . . . FK PACKAGE
(TOP VIEW)

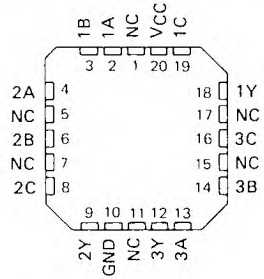

NC – No internal connection

logic diagram (positive logic)

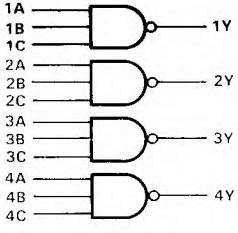

PRODUCTION DATA documents contain information current as of publication date. Products conform to specifications per the terms of Texas Instruments standard warranty. Production processing does not necessarily include testing of all parameters.

schematics (each gate)

'10

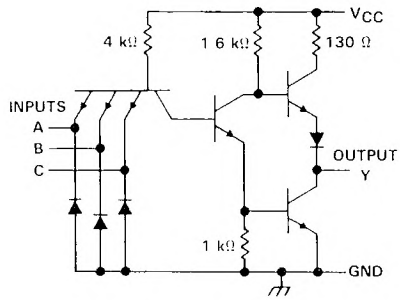

'LS10

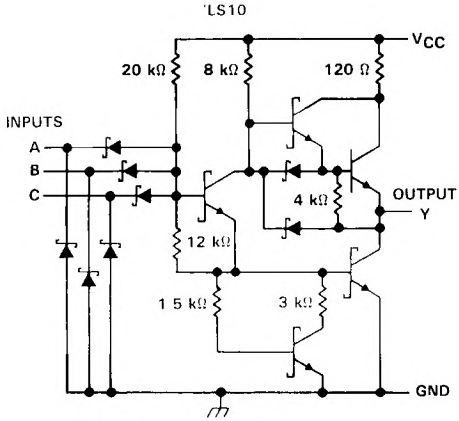

'S10

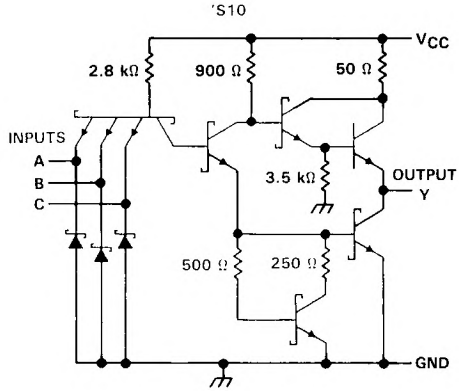

Resistor values shown are nominal.

absolute maximum ratings over operating free-air temperature range (unless otherwise noted)

Supply voltage, V_{CC} (see Note 1) . . . . . 7 V
Input voltage: '10, 'S10 . . . . . 5.5 V
'LS10 . . . . . 7 V
Operating free-air temperature range: SN54' . . . . . −55°C to 125°C
SN74' . . . . . 0°C to 70°C
Storage temperature range . . . . . −65°C to 150°C

NOTE 1: Voltage values are with respect to network ground terminal.

recommended operating conditions

	SN5410			SN7410			UNIT
	MIN	NOM	MAX	MIN	NOM	MAX	
V_{CC} Supply voltage	4.5	5	5.5	4.75	5	5.25	V
V_{IH} High-level input voltage	2			2			V
V_{IL} Low-level input voltage			0.8			0.8	V
I_{OH} High-level output current			−0.4			−0.4	mA
I_{OL} Low-level output current			16			16	mA
T_A Operating free-air temperature	−55		125	0		70	°C

electrical characteristics over recommended operating free-air temperature range (unless otherwise noted)

PARAMETER	TEST CONDITIONS†	SN5410			SN7410			UNIT
		MIN	TYP‡	MAX	MIN	TYP‡	MAX	
V_{IK}	V_{CC} = MIN, I_I = −12 mA			−1.5			−1.5	V
V_{OH}	V_{CC} = MIN, V_{IL} = 0.8 V, I_{OH} = −0.4 mA	2.4	3.4		2.4	3.4		V
V_{OL}	V_{CC} = MIN, V_{IH} = 2 V, I_{OL} = 16 mA		0.2	0.4		0.2	0.4	V
I_I	V_{CC} = MAX, V_I = 5.5 V			1			1	mA
I_{IH}	V_{CC} = MAX, V_I = 2.4 V			40			40	μA
I_{IL}	V_{CC} = MAX, V_I = 0.4 V			−1.6			−1.6	mA
I_{OS}§	V_{CC} = MAX	−20		−55	−18		−55	mA
I_{CCH}	V_{CC} = MAX, V_I = 0 V		3	6		3	6	mA
I_{CCL}	V_{CC} = MAX, V_I = 4.5 V		9	16.5		9	16.5	mA

† For conditions shown as MIN or MAX, use the appropriate value specified under recommended operating conditions.
‡ All typical values are at V_{CC} = 5 V, T_A = 25°C.
§ Not more than one output should be shorted at a time.

switching characteristics, V_{CC} = 5 V, T_A = 25°C (see note 2)

PARAMETER	FROM (INPUT)	TO (OUTPUT)	TEST CONDITIONS	MIN	TYP	MAX	UNIT
t_{PLH}	A, B or C	Y	R_L = 400 Ω, C_L = 15 pF		11	22	ns
t_{PHL}					7	15	ns

NOTE 2: Load circuits and voltage waveforms are shown in Section 1.

recommended operating conditions

	SN54LS10			SN74LS10			UNIT
	MIN	NOM	MAX	MIN	NOM	MAX	
V_{CC} Supply voltage	4.5	5	5.5	4.75	5	5.25	V
V_{IH} High-level input voltage	2			2			V
V_{IL} Low-level input voltage			0.7			0.8	V
I_{OH} High-level output current			−0.4			−0.4	mA
I_{OL} Low-level output current			4			8	mA
T_A Operating free-air temperature	−55		125	0		70	°C

electrical characteristics over recommended operating free-air temperature range (unless otherwise noted)

PARAMETER	TEST CONDITIONS †			SN54LS10			SN74LS10			UNIT
				MIN	TYP‡	MAX	MIN	TYP‡	MAX	
V_{IK}	V_{CC} = MIN,	I_I = −18 mA				−1.5			−1.5	V
V_{OH}	V_{CC} = MIN,	V_{IL} = MAX,	I_{OH} = −0.4 mA	2.5	3.4		2.7	3.4		V
V_{OL}	V_{CC} = MIN,	V_{IH} = 2 V,	I_{OL} = 4 mA		0.25	0.4			0.4	V
	V_{CC} = MIN,	V_{IH} = 2 V,	I_{OL} = 8 mA					0.25	0.5	
I_I	V_{CC} = MAX,	V_I = 7 V				0.1			0.1	mA
I_{IH}	V_{CC} = MAX,	V_I = 2.7 V				20			20	μA
I_{IL}	V_{CC} = MAX,	V_I = 0.4 V				−0.4			−0.4	mA
I_{OS}§	V_{CC} = MAX			−20		−100	−20		−100	mA
I_{CCH}	V_{CC} = MAX,	V_I = 0 V			0.6	1.2		0.6	1.2	mA
I_{CCL}	V_{CC} = MAX,	V_I = 4.5 V			1.8	3.3		1.8	3.3	mA

† For conditions shown as MIN or MAX, use the appropriate value specified under recommended operating conditions.
‡ All typical values are at V_{CC} = 5 V, T_A = 25°C.
§ Not more than one output should be shorted at a time, and the duration of the short-circuit should not exceed one second.

switching characteristics, V_{CC} = 5 V, T_A = 25°C (see note 2)

PARAMETER	FROM (INPUT)	TO (OUTPUT)	TEST CONDITIONS	MIN	TYP	MAX	UNIT
t_{PLH}	A, B or C	Y	R_L = 2 kΩ, C_L = 15 pF		9	15	ns
t_{PHL}					10	15	ns

NOTE 2: Load circuits and voltage waveforms are shown in Section 1.

TEXAS INSTRUMENTS
POST OFFICE BOX 655012 • DALLAS, TEXAS 75265

recommended operating conditions

	SN54S10			SN74S10			UNIT
	MIN	NOM	MAX	MIN	NOM	MAX	
V_{CC} Supply voltage	4.5	5	5.5	4.75	5	5.25	V
V_{IH} High-level input voltage	2			2			V
V_{IL} Low-level input voltage			0.8			0.8	V
I_{OH} High-level output current			−1			−1	mA
I_{OL} Low-level output current			20			20	mA
T_A Operating free-air temperature	−55		125	0		70	°C

electrical characteristics over recommended operating free-air temperature range (unless otherwise noted)

PARAMETER	TEST CONDITIONS †	SN54S10			SN74S10			UNIT
		MIN	TYP‡	MAX	MIN	TYP‡	MAX	
V_{IK}	V_{CC} = MIN, I_I = −18 mA			−1.2			−1.2	V
V_{OH}	V_{CC} = MIN, V_{IL} = 0.8 V, I_{OH} = −1 mA	2.5	3.4		2.7	3.4		V
V_{OL}	V_{CC} = MIN, V_{IH} = 2 V, I_{OL} = 20 mA			0.5			0.5	V
I_I	V_{CC} = MAX, V_I = 5.5 V			1			1	mA
I_{IH}	V_{CC} = MAX, V_I = 2.7 V			50			50	μA
I_{IL}	V_{CC} = MAX, V_I = 0.5 V			−2			−2	mA
I_{OS}§	V_{CC} = MAX	−40		−100	−40		−100	mA
I_{CCH}	V_{CC} = MAX, V_I = 0 V		7.5	12		7.5	12	mA
I_{CCL}	V_{CC} = MAX, V_I = 4.5 V		15	27		15	27	mA

† For conditions shown as MIN or MAX, use the appropriate value specified under recommended operating conditions.
‡ All typical values are at V_{CC} = 5 V, T_A = 25°C.
§ Not more than one output should be shorted at a time, and the duration of the short-circuit should not exceed one second.

switching characteristics, V_{CC} = 5 V, T_A = 25°C (see note 2)

PARAMETER	FROM (INPUT)	TO (OUTPUT)	TEST CONDITIONS	MIN	TYP	MAX	UNIT
t_{PLH}	A, B or C	Y	R_L = 280 Ω, C_L = 15 pF		3	4.5	ns
t_{PHL}					3	5	ns
t_{PLH}			R_L = 280 Ω, C_L = 50 pF		4.5		ns
t_{PHL}					5		ns

NOTE 2: Load circuits and voltage waveforms are shown in Section 1.

- **Package Options Include Plastic "Small Outline" Packages, Ceramic Chip Carriers and Flat Packages, and Plastic and Ceramic DIPs**
- **Dependable Texas Instruments Quality and Reliability**

description

These devices contain three independent 3-input AND gates.

The SN54LS11 and SN54S11 are characterized for operation over the full military temperature range of −55°C to 125°C. The SN74LS11 and SN74S11 are characterized for operation from 0°C to 70°C.

FUNCTION TABLE (each gate)

INPUTS			OUTPUT
A	B	C	Y
H	H	H	H
L	X	X	L
X	L	X	L
X	X	L	L

logic symbol†

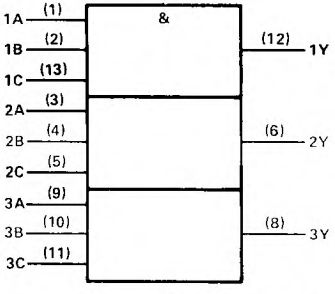

†This symbol is in accordance with ANSI/IEEE Std. 91-1984 and IEC Publication 617-12.
Pin numbers shown are for D, J, N, and W packages.

SN54LS11, SN74S11 . . . J OR W PACKAGE
SN74LS11, SN74S11 . . . D OR N PACKAGE
(TOP VIEW)

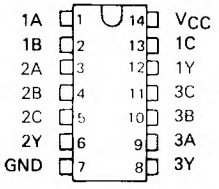

SN54LS11, SN54S11 . . . FK PACKAGE
(TOP VIEW)

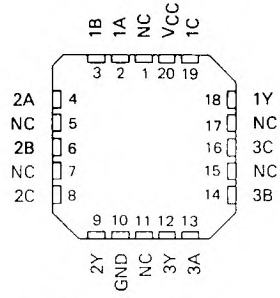

NC—No internal connection

logic diagram (positive logic)

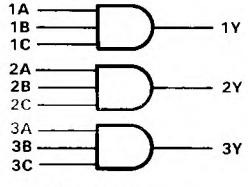

$Y = A \cdot B \cdot C$ or

$Y = \overline{\overline{A} + \overline{B} + \overline{C}}$

PRODUCTION DATA documents contain information current as of publication date. Products conform to specifications per the terms of Texas Instruments standard warranty. Production processing does not necessarily include testing of all parameters.

schematics (each gate)

'LS11

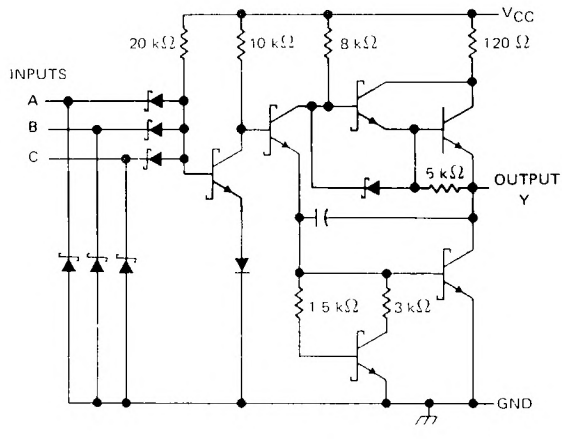

'S11

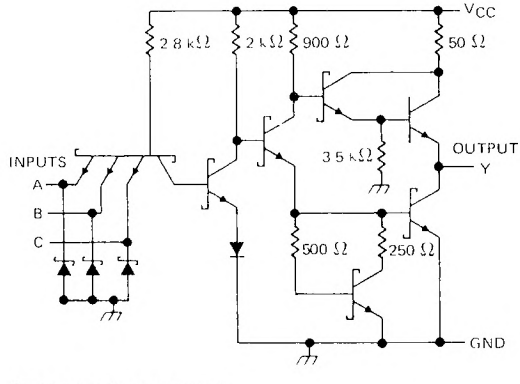

Resistor values shown are nominal

absolute maximum ratings over operating free-air temperature range (unless otherwise noted)

Supply voltage, V_{CC} (see Note 1) . . . . . 7 V
Input voltage: 'S11 . . . . . 5.5 V
'LS11 . . . . . 7 V
Operating free-air temperature range: SN54' . . . . . −55°C to 125°C
SN74' . . . . . 0°C to 70°C
Storage temperature range . . . . . −65°C to 150°C

NOTE 1: Voltage values are with respect to network ground terminal.

TEXAS INSTRUMENTS
POST OFFICE BOX 655012 • DALLAS, TEXAS 75265

recommended operating conditions

	SN54LS11			SN74LS11			UNIT
	MIN	NOM	MAX	MIN	NOM	MAX	
V_{CC} Supply voltage	4.5	5	5.5	4.75	5	5.25	V
V_{IH} High-level input voltage	2			2			V
V_{IL} Low-level input voltage			0.7			0.8	V
I_{OH} High-level output current			−0.4			−0.4	mA
I_{OL} Low-level output current			4			8	mA
T_A Operating free-air temperature	−55		125	0		70	°C

electrical characteristics over recommended operating free-air temperature range (unless otherwise noted)

PARAMETER	TEST CONDITIONS †	SN54LS11			SN74LS11			UNIT
		MIN	TYP‡	MAX	MIN	TYP‡	MAX	
V_{IK}	V_{CC} = MIN, I_I = −18 mA			−1.5			−1.5	V
V_{OH}	V_{CC} = MIN, V_{IH} = 2 V, I_{OH} = −0.4 mA	2.5	3.4		2.7	3.4		V
V_{OL}	V_{CC} = MIN, V_{IL} = MAX, I_{OL} = 4 mA		0.25	0.4		0.25	0.4	V
	V_{CC} = MIN, V_{IL} = MAX, I_{OL} = 8 mA					0.35	0.5	
I_I	V_{CC} = MAX, V_I = 7 V			0.1			0.1	mA
I_{IH}	V_{CC} = MAX, V_I = 2.7 V			20			20	μA
I_{IL}	V_{CC} = MAX, V_I = 0.4 V			−0.4			−0.4	mA
I_{OS} §	V_{CC} = MAX	−20		−100	−20		−100	mA
I_{CCH}	V_{CC} = MAX, V_I = 4.5 V		1.8	3.6		1.8	3.6	mA
I_{CCL}	V_{CC} = MAX, V_I = 0 V		3.3	6.6		3.3	6.6	mA

† For conditions shown as MIN or MAX, use the appropriate value specified under recommended operating conditions.
‡ All typical values are at V_{CC} = 5 V, T_A = 25°C.
§ Not more than one output should be shorted at a time, and the duration of the short-circuit should not exceed one second.

switching characteristics, V_{CC} = 5 V, T_A = 25°C (see note 2)

PARAMETER	FROM (INPUT)	TO (OUTPUT)	TEST CONDITIONS	MIN	TYP	MAX	UNIT
t_{PLH}	A, B or C	Y	R_L = 2 kΩ, C_L = 15 pF		8	15	ns
t_{PHL}					10	20	ns

NOTE 2: Load circuits and voltage waveforms are shown in Section 1.

recommended operating conditions

	SN54S11			SN74S11			UNIT
	MIN	NOM	MAX	MIN	NOM	MAX	
V_{CC} Supply voltage	4.5	5	5.5	4.75	5	5.25	V
V_{IH} High-level input voltage	2			2			V
V_{IL} Low-level input voltage			0.8			0.8	V
I_{OH} High-level output current			−1			−1	mA
I_{OL} Low-level output current			20			20	mA
T_A Operating free-air temperature	−55		125	0		70	°C

electrical characteristics over recommended operating free-air temperature range (unless otherwise noted)

PARAMETER	TEST CONDITIONS †				SN54S11			SN74S11			UNIT
					MIN	TYP ‡	MAX	MIN	TYP ‡	MAX	
V_{IK}	V_{CC} = MIN,	I_I = −18 mA					−1.2			−1.2	V
V_{OH}	V_{CC} = MIN,	V_{IH} = 2 V,	I_{OH} = −1 mA		2.5	3.4		2.7	3.4		V
V_{OL}	V_{CC} = MIN,	V_{IL} = 0.8 V,	I_{OL} = 20 mA				0.5			0.5	V
I_I	V_{CC} = MAX,	V_I = 5.5 V					1			1	mA
I_{IH}	V_{CC} = MAX,	V_I = 2.7 V					50			50	μA
I_{IL}	V_{CC} = MAX,	V_I = 0.5 V					−2			−2	mA
I_{OS} §	V_{CC} = MAX				−40		−100	−40		−100	mA
I_{CCH}	V_{CC} = MAX,	V_I = 4.5 V				13.5	24		13.5	24	mA
I_{CCL}	V_{CC} = MAX,	V_I = 0 V				24	42		24	42	mA

† For conditions shown as MIN or MAX, use the appropriate value specified under recommended operating conditions.
‡ All typical values are at V_{CC} = 5 V, T_A = 25°C.
§ Not more than one output should be shorted at a time, and the duration of the short circuit should not exceed one second.

switching characteristics, V_{CC} = 5 V, T_A = 25°C (see note 2)

PARAMETER	FROM (INPUT)	TO (OUTPUT)	TEST CONDITIONS		MIN	TYP	MAX	UNIT
t_{PLH}	A, B or C	Y	R_L = 280 Ω,	C_L = 15 pF		4.5	7	ns
t_{PHL}						5	7.5	ns
t_{PLH}			R_L = 280 Ω,	C_L = 50 pF		6		ns
t_{PHL}						7.5		ns

NOTE 2: Load circuits and voltage waveforms are shown in Section 1.

TEXAS INSTRUMENTS
POST OFFICE BOX 655012 • DALLAS, TEXAS 75265

TRIPLE 3-INPUT POSITIVE-NAND GATES WITH OPEN-COLLECTOR OUTPUTS

DECEMBER 1983—REVISED MARCH 1988

- **Package Options Include Plastic "Small Outline" Packages, Ceramic Chip Carriers and Flat Packages, and Plastic and Ceramic DIPs**
- **Dependable Texas Instruments Quality and Reliability**

description

These devices contain three independent 3-input NAND gates with open-collector outputs. The open-collector outputs require pull-up resistors to perform correctly. They may be connected to other open-collector outputs to implement active-low wired-OR or active-high wired-AND functions. Open-collector devices are often used to generate higher V_{OH} levels.

The SN5412 and SN54LS12 are characterized for operation over the full military temperature range of −55°C to 125°C. The SN7412 and SN74LS12 are characterized for operation from 0°C to 70°C.

FUNCTION TABLE (each gate)

INPUTS			OUTPUT
A	B	C	Y
H	H	H	L
L	X	X	H
X	L	X	H
X	X	L	H

logic symbol†

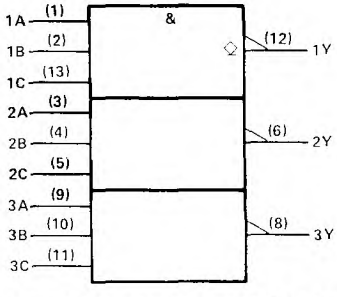

† This symbol is in accordance with ANSI/IEEE Std 91-1984 and IEC Publication 617-12.
Pin numbers shown are for D, J, N, and W packages.

SN5412, SN54LS12 . . . J OR W PACKAGE
SN7412 . . . N PACKAGE
SN74LS12 . . . D OR N PACKAGE
(TOP VIEW)

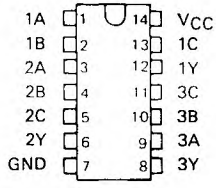

SN54LS12 . . . FK PACKAGE
(TOP VIEW)

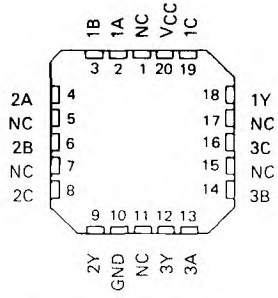

NC No internal connection

logic diagram (positive logic)

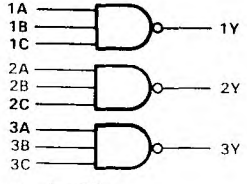

$Y = \overline{A \cdot B \cdot C}$ or

$Y = \overline{A} + \overline{B} + \overline{C}$

PRODUCTION DATA documents contain information current as of publication date. Products conform to specifications per the terms of Texas Instruments standard warranty. Production processing does not necessarily include testing of all parameters.

schematics (each gate)

'12

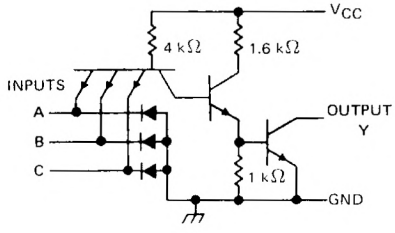

'LS12

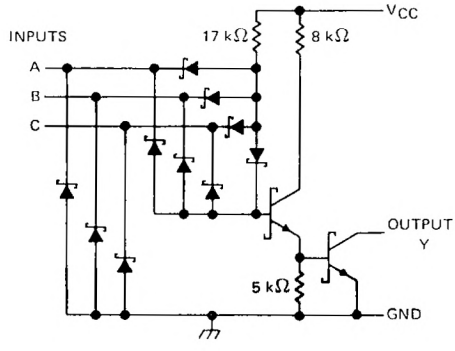

Resistor values shown are nominal.

absolute maximum ratings over operating free-air temperature range (unless otherwise noted)

Supply voltage, V_{CC} (see Note 1) . . . . . 7 V
Input voltage: '12 . . . . . 5.5 V
'LS12 . . . . . 7 V
Off-state output voltage . . . . . 7 V
Operating free-air temperature: SN54' . . . . . −55°C to 125°C
SN74' . . . . . 0°C to 70°C
Storage temperature range . . . . . −65°C to 150°C

NOTE 1: Voltage values are with respect to network ground terminal.

TEXAS INSTRUMENTS
POST OFFICE BOX 655012 • DALLAS, TEXAS 75265

recommended operating conditions

		SN5412			SN7412			UNIT
		MIN	NOM	MAX	MIN	NOM	MAX	
V_{CC}	Supply voltage	4.5	5	5.5	4.75	5	5.25	V
V_{IH}	High-level input voltage	2			2			V
V_{IL}	Low-level input voltage			0.8			0.8	V
V_{OH}	High-level output voltage			5.5			5.5	V
I_{OL}	Low-level output current			16			16	mA
T_A	Operating free-air temperature	−55		125	0		70	°C

electrical characteristics over recommended operating free-air temperature range (unless otherwise noted)

PARAMETER	TEST CONDITIONS†	SN5412			SN7412			UNIT
		MIN	TYP‡	MAX	MIN	TYP‡	MAX	
V_{IK}	V_{CC} = MIN, I_I = −12 mA			−1.5			−1.5	V
I_{OH}	V_{CC} = MIN, V_{IL} = 0.8 V, V_{OH} = 5.5 V						0.25	mA
	V_{CC} = MIN, V_{IL} = 0.7 V, V_{OH} = 5.5 V			0.25				
V_{OL}	V_{CC} = MIN, V_{IH} = 2 V, I_{OL} = 16 mA		0.2	0.4		0.2	0.4	V
I_I	V_{CC} = MAX, V_I = 5.5 V			1			1	mA
I_{IH}	V_{CC} = MAX, V_I = 2.4 V			40			40	μA
I_{IL}	V_{CC} = MAX, V_I = 0.4 V			−1.6			−1.6	mA
I_{CCH}	V_{CC} = MAX, V_I = 0		3	6		3	6	mA
I_{CCL}	V_{CC} = MAX, V_I = 4.5 V		9	16.5		9	16.5	mA

†For conditions shown as MIN or MAX, use the appropriate value specified under recommended operating conditions.
‡All typical values are at V_{CC} = 5 V, T_A = 25°C.

switching characteristics, V_{CC} = 5 V, T_A = 25°C (see note 2)

PARAMETER	FROM (INPUT)	TO (OUTPUT)	TEST CONDITIONS	MIN	TYP	MAX	UNIT
t_{PLH}	A, B or C	Y	R_L = 4 kΩ, C_L = 15 pF		35	45	ns
t_{PHL}			R_L = 400 Ω, C_L = 15 pF		8	15	ns

NOTE 2: Load circuits and voltage waveforms are shown in Section 1

recommended operating conditions

	SN54LS12			SN74LS12			UNIT
	MIN	NOM	MAX	MIN	NOM	MAX	
V_{CC} Supply voltage	4.5	5	5.5	4.75	5	5.25	V
V_{IH} High-level input voltage	2			2			V
V_{IL} Low-level input voltage			0.7			0.8	V
V_{OH} High-level output voltage			5.5			5.5	V
I_{OL} Low-level output current			4			8	mA
T_A Operating free-air temperature	−55		125	0		70	°C

electrical characteristics over recommended operating free-air temperature range (unless otherwise noted)

PARAMETER	TEST CONDITIONS†	SN54LS12			SN74LS12			UNIT
		MIN	TYP‡	MAX	MIN	TYP‡	MAX	
V_{IK}	V_{CC} = MIN, I_I = −18 mA			−1.5			−1.5	V
I_{OH}	V_{CC} = MIN, V_{IL} = MAX, V_{OH} = 5.5 V			0.1			0.1	mA
V_{OL}	V_{CC} = MIN, V_{IH} = 2 V, I_{OL} = 4 mA		0.25	0.4		0.25	0.4	V
	V_{CC} = MIN, V_{IH} = 2 V, I_{OL} = 8 mA						0.35	0.5	V
I_I	V_{CC} = MAX, V_I = 7 V			0.1			0.1	mA
I_{IH}	V_{CC} = MAX, V_I = 2.7 V			20			20	μA
I_{IL}	V_{CC} = MAX, V_I = 0.4 V			−0.4			−0.4	mA
I_{CCH}	V_{CC} = MAX, V_I = 0		0.7	1.4		0.7	1.4	mA
I_{CCL}	V_{CC} = MAX, V_I = 4.5 V		1.8	3.3		1.8	3.3	mA

† For conditions shown as MIN or MAX, use the appropriate value specified under recommended operating conditions.
‡ All typical values are at V_{CC} = 5 V, T_A = 25°C.

switching characteristics, V_{CC} = 5 V, T_A = 25°C (see note 2)

PARAMETER	FROM (INPUT)	TO (OUTPUT)	TEST CONDITIONS	MIN	TYP	MAX	UNIT
t_{PLH}	A, B or C	Y	R_L = 2 kΩ, C_L = 15 pF		17	32	ns
t_{PHL}					15	28	ns

NOTE 2: Load circuits and voltage waveforms are shown in Section 1.

TEXAS INSTRUMENTS
POST OFFICE BOX 655012 • DALLAS, TEXAS 75265

- **Operation from Very Slow Edges**
- **Improved Line-Receiving Characteristics**
- **High Noise Immunity**

description

Each circuit functions as a 4-input NAND gate, but because of the Schmitt action, it has different input threshold levels for positive (V_{T+}) and for negative going (V_{T-}) signals.

These circuits are temperature-compensated and can be triggered from the slowest of input ramps and still give clean, jitter-free output signals.

The SN5413 and SN54LS13 are characterized for operation over the full military temperature range of −55°C to 125°C. The SN7413 and SN74LS13 are characterized for operation from 0°C to 70°C.

logic symbol†

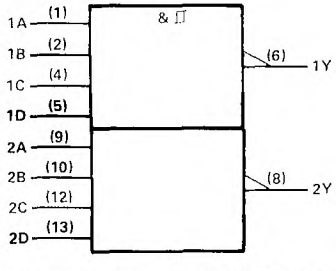

† This symbol is in accordance with ANSI/IEEE Std 91-1984 and IEC Publication 617-13.
Pin numbers shown are for D, J, N, and W packages.

SN5413, SN54LS13 . . . J OR W PACKAGE
SN7413 . . . N PACKAGE
SN74LS13 . . . D OR N PACKAGE
(TOP VIEW)

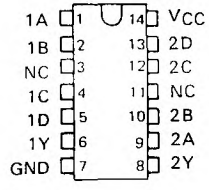

SN54LS13 . . . FK PACKAGE
(TOP VIEW)

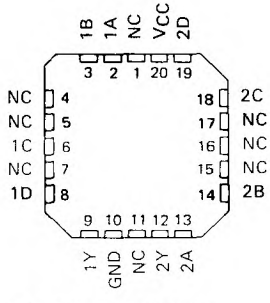

NC—No internal connection

logic diagram (positive logic)

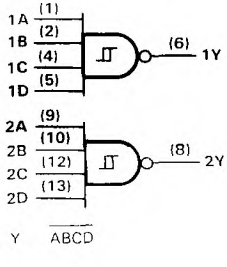

$Y = \overline{ABCD}$

PRODUCTION DATA documents contain information current as of publication date. Products conform to specifications per the terms of Texas Instruments standard warranty. Production processing does not necessarily include testing of all parameters.

schematics

'13

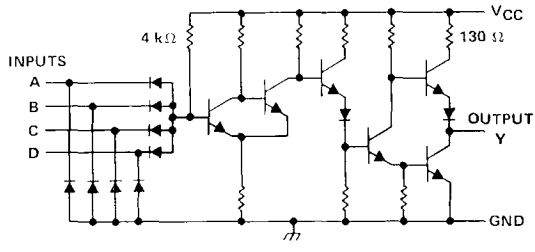

'LS13

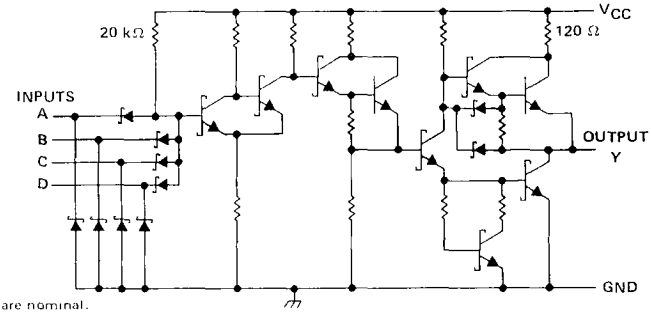

Resistor values are nominal.

absolute maximum ratings over operating free-air temperature range (unless otherwise noted)

Supply voltage, V_{CC} (see Note 1) . . . . . 7 V
Input voltage: '13 . . . . . 5.5 V
'LS13 . . . . . 7 V
Operating free-air temperature: SN54' . . . . . −55°C to 125°C
SN74' . . . . . 0°C to 70°C
Storage temperature range . . . . . −65°C to 150°C

NOTE 1: Voltage values are with respect to network ground terminal.

TEXAS INSTRUMENTS
POST OFFICE BOX 655012 • DALLAS, TEXAS 75265

recommended operating conditions

	SN5413			SN7413			UNIT
	MIN	NOM	MAX	MIN	NOM	MAX	
V_{CC} Supply voltage	4.5	5	5.5	4.75	5	5.25	V
I_{OH} High-level output current			−0.8			−0.8	mA
I_{OL} Low-level output current			16			16	mA
T_A Operating free-air temperature	−55		125	0		70	°C

electrical characteristics over recommended operating free-air temperature range (unless otherwise noted)

PARAMETER	TEST CONDITIONS†			MIN	TYP‡	MAX	UNIT
V_{T+}	V_{CC} = 5 V			1.5	1.7	2	V
V_{T-}	V_{CC} = 5 V			0.6	0.9	1.1	V
Hysteresis ($V_{T+} - V_{T-}$)	V_{CC} = 5 V			0.4	0.8		V
V_{IK}	V_{CC} = MIN,	I_I = −12 mA				−1.5	V
V_{OH}	V_{CC} = MIN,	V_I = 0.6 V,	I_{OH} = −0.8 mA	2.4	3.4		V
V_{OL}	V_{CC} = MIN,	V_I = 2 V,	I_{OL} = 16 mA		0.2	0.4	V
I_{T+}	V_{CC} = 5 V,	$V_I = V_{T+}$			−0.65		mA
I_{T-}	V_{CC} = 5 V,	$V_I = V_{T-}$			−0.85		mA
I_I	V_{CC} = MAX,	V_I = 5.5 V				1	mA
I_{IH}	V_{CC} = MAX,	V_{IH} = 2.4 V				40	μA
I_{IL}	V_{CC} = MAX,	V_{IL} = 0.4 V			−1	−1.6	mA
I_{OS} §	V_{CC} = MAX,			−18		−55	mA
I_{CCH}	V_{CC} = MAX				14	23	mA
I_{CCL}	V_{CC} = MAX				20	32	mA

† For conditions shown as MIN or MAX, use the appropriate value specified under recommended operating conditions.
‡ All typical values are at V_{CC} = 5 V, T_A = 25°C.
§ Not more than one output should be shorted at a time.

switching characteristics, V_{CC} = 5 V, T_A = 25°C

PARAMETER	FROM (INPUT)	TO (OUTPUT)	TEST CONDITIONS	MIN	TYP	MAX	UNIT
t_{PLH}	Any	Y	R_L = 400 Ω, C_L = 15 pF		18	27	ns
t_{PHL}					15	22	ns

recommended operating conditions

		SN54LS13			SN74LS13			UNIT
		MIN	NOM	MAX	MIN	NOM	MAX	
V_{CC}	Supply voltage	4.5	5	5.5	4.75	5	5.25	V
I_{OH}	High-level output current			−0.4			−0.4	mA
I_{OL}	Low-level output current			4			8	mA
T_A	Operating free-air temperature	−55		125	0		70	°C

electrical characteristics over recommended operating free-air temperature range (unless otherwise noted)

PARAMETER	TEST CONDITIONS†		SN54LS13			SN74LS13			UNIT
			MIN	TYP‡	MAX	MIN	TYP‡	MAX	
V_{T+}	V_{CC} = 5 V		1.4	1.6	1.9	1.4	1.6	1.9	V
V_{T-}	V_{CC} = 5 V		0.5	0.8	1	0.5	0.8	1	V
Hysteresis ($V_{T+} - V_{T-}$)	V_{CC} = 5 V		0.4	0.8		0.4	0.8		V
V_{IK}	V_{CC} = MIN, I_I = −18 mA				−1.5			−1.5	V
V_{OH}	V_{CC} = MIN, V_I = 0.5 V, I_{OH} = −0.4 mA		2.5	3.4		2.7	3.4		V
V_{OL}	V_{CC} = MIN, V_I = 1.9 V	I_{OL} = 4 mA		0.25	0.4		0.25	0.4	V
		I_{OL} = 8 mA					0.35	0.5	
I_{T+}	V_{CC} = 5 V, V_I = V_{T+}			−0.14			−0.14		mA
I_{T-}	V_{CC} = 5 V, V_I = V_{T-}			−0.18			−0.18		mA
I_I	V_{CC} = MAX, V_I = 7 V				0.1			0.1	mA
I_{IH}	V_{CC} = MAX, V_{IH} = 2.7 V				20			20	μA
I_{IL}	V_{CC} = MAX, V_{IL} = 0.4 V				−0.4			−0.4	mA
I_{OS}§	V_{CC} = MAX		−20		−100	−20		−100	mA
I_{CCH}	V_{CC} = MAX			2.9	6		2.9	6	mA
I_{CCL}	V_{CC} = MAX			4.1	7		4.1	7	mA

† For conditions shown as MIN or MAX, use the appropriate value specified under recommended operating conditions.
‡ All typical values are at V_{CC} = 5 V, T_A = 25°C.
§ Not more than one output should be shorted at a time, and duration of the short-circuit should not exceed one second.

switching characteristics, V_{CC} = 5 V, T_A = 25°C

PARAMETER	FROM (INPUT)	TO (OUTPUT)	TEST CONDITIONS	MIN	TYP	MAX	UNIT
t_{PLH}	Any	Y	R_L = 2 kΩ, C_L = 15 pF		15	22	ns
t_{PHL}					18	27	ns

TEXAS INSTRUMENTS
POST OFFICE BOX 655012 • DALLAS, TEXAS 75265

PARAMETER MEASUREMENT INFORMATION

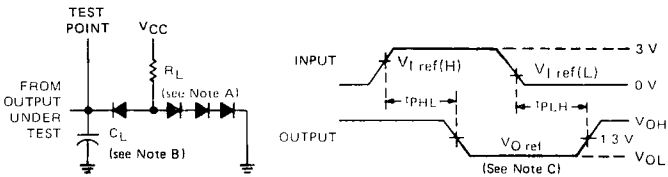

LOAD CIRCUIT VOLTAGE WAVEFORMS

NOTES: A. All diodes are 1N3064 or equivalent.
B. C_L includes probe and jig capacitance.
C. Generator characteristics and reference voltages are:

	Generator Characteristics				Reference Voltages		
	Z_{out}	PRR	t_r	t_f	$V_{I\,ref(H)}$	$V_{I\,ref(L)}$	$V_{O\,ref}$
SN54'/SN74'	50 Ω	1 MHz	10 ns	10 ns	1.7 V	0.9 V	1.5 V
SN54LS'/SN74LS'	50 Ω	1 MHz	15 ns	6 ns	1.6 V	0.8 V	1.3 V

TYPICAL CHARACTERISTICS OF '13 CIRCUITS

POSITIVE-GOING THRESHOLD VOLTAGE
vs
FREE-AIR TEMPERATURE

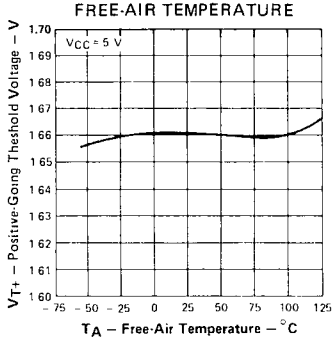

FIGURE 1

NEGATIVE-GOING THRESHOLD VOLTAGE
vs
FREE-AIR TEMPERATURE

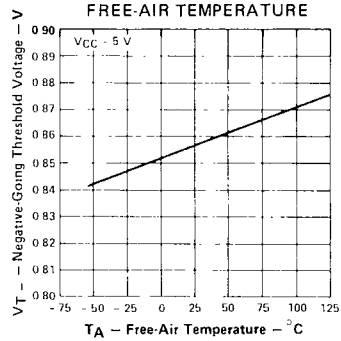

FIGURE 2

HYSTERESIS
vs
FREE-AIR TEMPERATURE

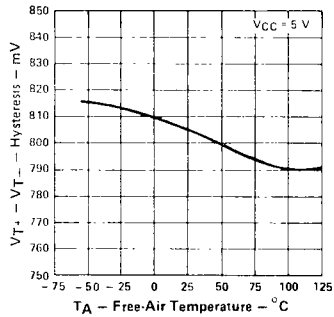

FIGURE 3

Data for temperatures below 0°C and 70°C and supply voltages below 4.75 V and above 5.25 V are applicable for SN5413 only.

TYPICAL CHARACTERISTICS OF '13 CIRCUITS

DISTRIBUTION OF UNITS
FOR HYSTERESIS

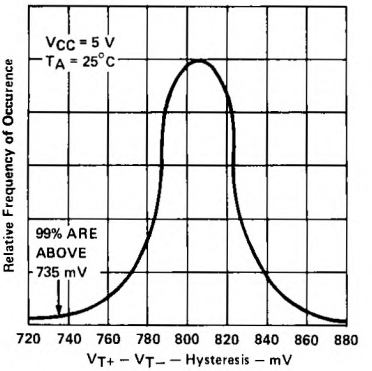

FIGURE 4

THRESHOLD VOLTAGES
vs
SUPPLY VOLTAGE

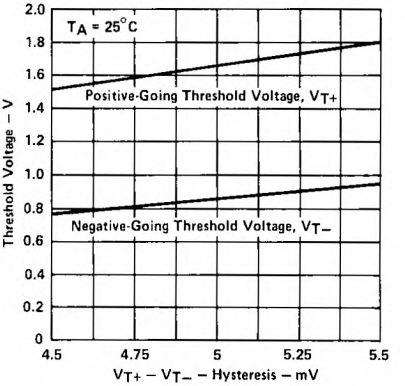

FIGURE 5

HYSTERESIS
vs
SUPPLY VOLTAGE

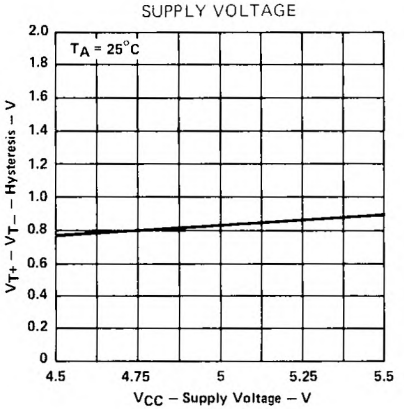

FIGURE 6

OUTPUT VOLTAGE
vs
INPUT VOLTAGE

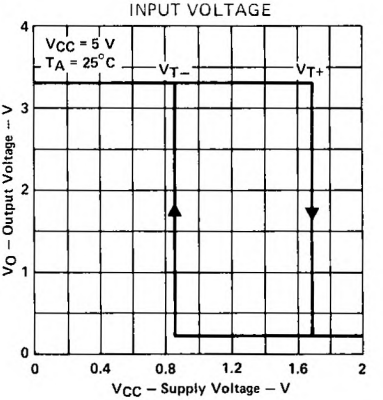

FIGURE 7

Data for temperatures below 0°C and 70°C and supply voltages below 4.75 V and above 5.25 V are applicable for SN5413 only.

TEXAS INSTRUMENTS
POST OFFICE BOX 655012 • DALLAS, TEXAS 75265

TYPICAL CHARACTERISTICS OF 'LS13 CIRCUITS

POSITIVE-GOING THRESHOLD VOLTAGE
vs
FREE-AIR TEMPERATURE

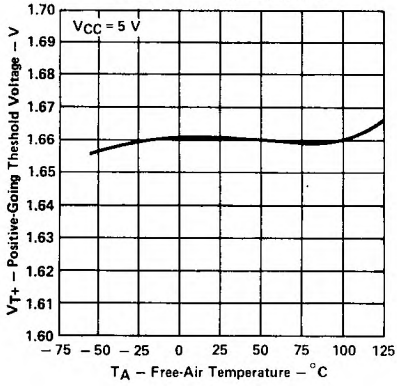

FIGURE 8

NEGATIVE-GOING THRESHOLD VOLTAGE
vs
FREE-AIR TEMPERATURE

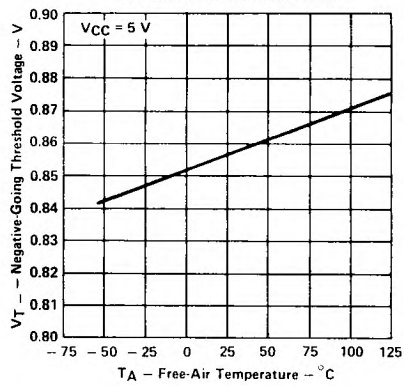

FIGURE 9

HYSTERESIS
vs
FREE-AIR TEMPERATURE

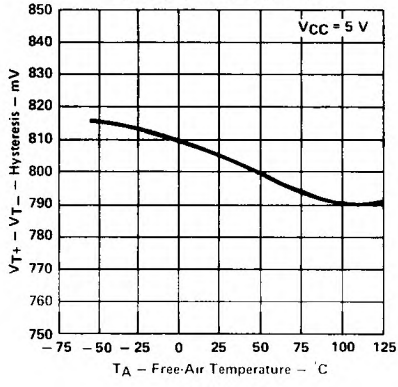

FIGURE 10

DISTRIBUTION OF UNITS
FOR HYSTERESIS

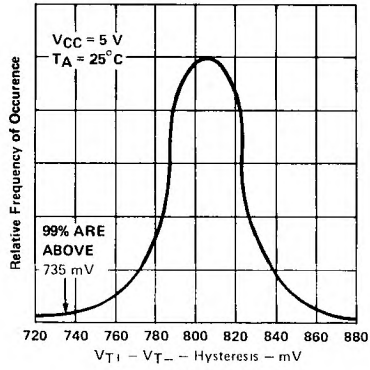

FIGURE 11

Data for temperatures below 0°C and above 70°C and supply voltages below 4.75 V and above 5.25 V are applicable for SN54LS13 only.

TYPICAL CHARACTERISTICS OF 'LS13 CIRCUITS

THRESHOLD VOLTAGES AND HYSTERESIS
vs
SUPPLY VOLTAGE

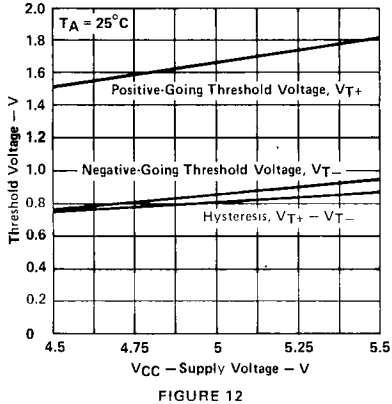

FIGURE 12

OUTPUT VOLTAGE
vs
INPUT VOLTAGE

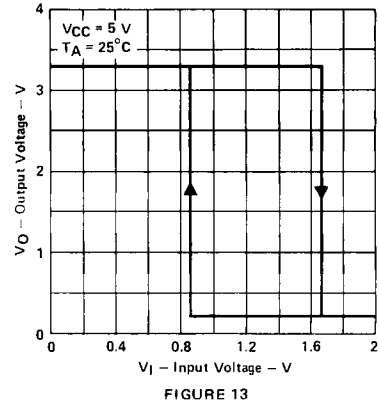

FIGURE 13

Data for temperatures below 0°C and above 70°C and supply voltages below 4.75 V and above 5.25 V are applicable for SN54LS13 only.

TYPICAL APPLICATION DATA

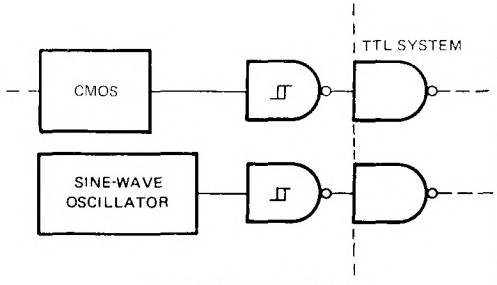

TTL SYSTEM INTERFACE
FOR SLOW INPUT WAVEFORMS

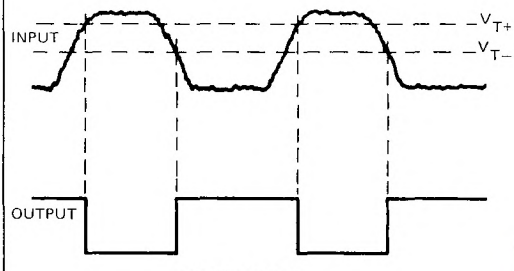

PULSE SHAPER

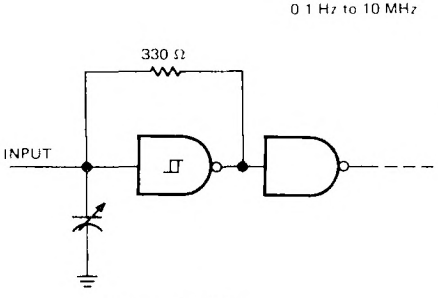

MULTIVIBRATOR

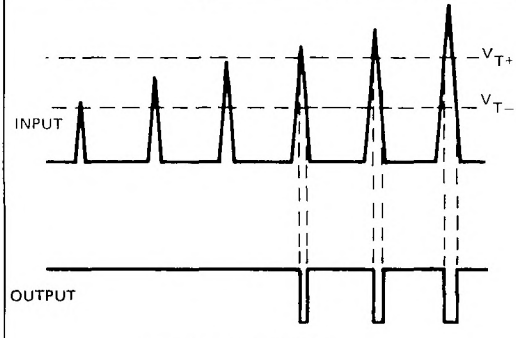

THRESHOLD DETECTOR

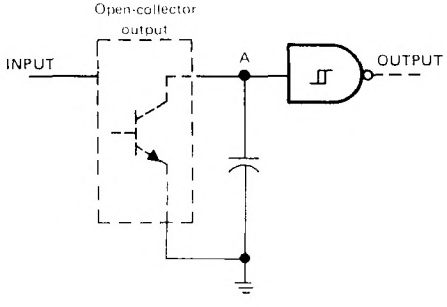

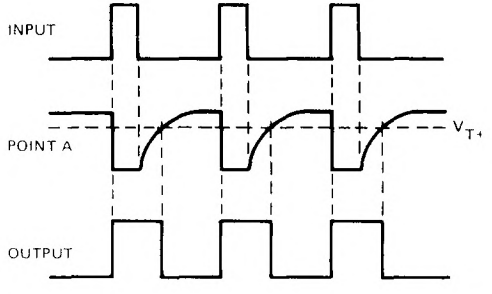

PULSE STRETCHER

- **Operation from Very Slow Edges**
- **Improved Line-Receiving Characteristics**
- **High Noise Immunity**

SN5414, SN54LS14 . . . J OR W PACKAGE
SN7414 . . . N PACKAGE
SN74LS14 . . . D OR N PACKAGE
(TOP VIEW)

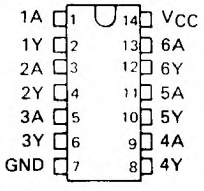

SN54LS14 . . . FK PACKAGE
(TOP VIEW)

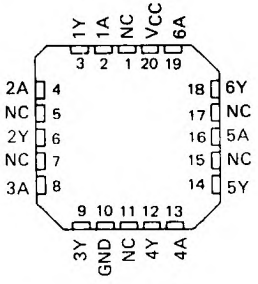

NC – No internal connection

description

Each circuit functions as an inverter, but because of the Schmitt action, it has different input threshold levels for positive (V_{T+}) and for negative going (V_{T-}) signals.

These circuits are temperature-compensated and can be triggered from the slowest of input ramps and still give clean, jitter-free output signals.

The SN5414 and SN54LS14 are characterized for operation over the full military temperature range of −55°C to 125°C. The SN7414 and the SN74LS14 are characterized for operation from 0° C to 70° C.

logic symbol†

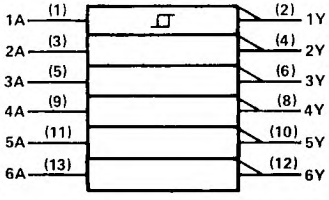

† This symbol is in accordance with ANSI/IEEE Std 91-1984 and IEC Publication 617-12.
Pin numbers shown are for D, J, N, and W packages.

logic diagram (positive logic)

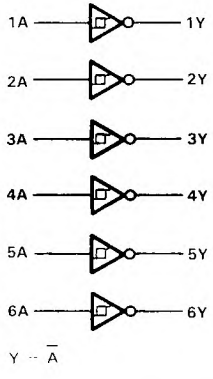

$Y = \overline{A}$

PRODUCTION DATA documents contain information current as of publication date. Products conform to specifications per the terms of Texas Instruments standard warranty. Production processing does not necessarily include testing of all parameters.

schematics

'14

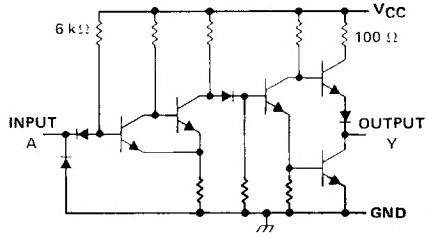

'LS14

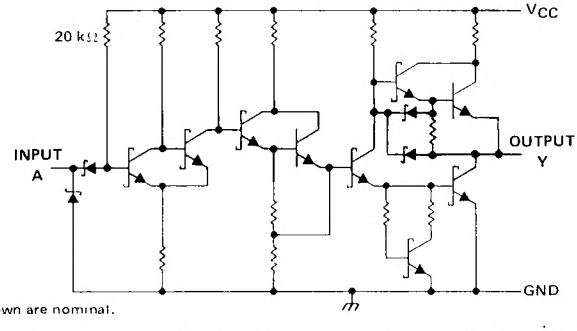

Resistor values shown are nominal.

absolute maximum ratings over operating free-air temperature range (unless otherwise noted)

Supply voltage, V_{CC} (see Note 1) . . . . . 7 V
Input voltage: '14 . . . . . 5.5 V
'LS14 . . . . . 7 V
Operating free-air temperature: SN54' . . . . . −55°C to 125°C
SN74' . . . . . 0°C to 70°C
Storage temperature range . . . . . −65°C to 150°C

NOTE 1: Voltage values are with respect to network ground terminal.

TEXAS INSTRUMENTS
POST OFFICE BOX 655012 • DALLAS, TEXAS 75265

recommended operating conditions

		SN5414			SN7414			UNIT
		MIN	NOM	MAX	MIN	NOM	MAX	
V_{CC}	Supply voltage	4.5	5	5.5	4.75	5	5.25	V
I_{OH}	High-level output current			−0.8			−0.8	mA
I_{OL}	Low-level output current			16			16	mA
T_A	Operating free-air temperature	−55		125	0		70	°C

electrical characteristics over recommended operating free-air temperature range (unless otherwise noted)

PARAMETER	TEST CONDITIONS†			MIN	TYP‡	MAX	UNIT
V_{T+}	V_{CC} = 5 V			1.5	1.7	2	V
V_{T-}	V_{CC} = 5 V			0.6	0.9	1.1	V
Hysteresis ($V_{T+} - V_{T-}$)	V_{CC} = 5 V			0.4	0.8		V
V_{IK}	V_{CC} = MIN,	I_I = −12 mA				−1.5	V
V_{OH}	V_{CC} = MIN,	V_I = 0.6 V,	I_{OH} = −0.8 mA	2.4	3.4		V
V_{OL}	V_{CC} = MIN,	V_I = 2 V,	I_{OL} = 16 mA		0.2	0.4	V
I_{T+}	V_{CC} = 5 V,	$V_I = V_{T+}$			−0.43		mA
I_{T-}	V_{CC} = 5 V,	$V_I = V_{T-}$			−0.56		mA
I_I	V_{CC} = MAX,	V_I = 5.5 V				1	mA
I_{IH}	V_{CC} = MAX,	V_{IH} = 2.4 V				40	μA
I_{IL}	V_{CC} = MAX,	V_{IL} = 0.4 V			−0.8	−1.2	mA
I_{OS}§	V_{CC} = MAX			−18		−55	mA
I_{CCH}	V_{CC} = MAX				22	36	mA
I_{CCL}	V_{CC} = MAX				39	60	mA

† For conditions shown as MIN or MAX, use the appropriate value specified under recommended operating conditions.
‡ All typical values are at V_{CC} = 5 V, T_A = 25°C.
§ Not more than one output should be shorted at a time.

switching characteristics, V_{CC} = 5 V, T_A = 25°C

PARAMETER	FROM (INPUT)	TO (OUTPUT)	TEST CONDITIONS	MIN	TYP	MAX	UNIT
t_{PLH}	A	Y	R_L = 400 Ω, C_L = 15 pF		15	22	ns
t_{PHL}					15	22	ns

recommended operating conditions

	SN54LS14			SN74LS14			UNIT
	MIN	NOM	MAX	MIN	NOM	MAX	
V_{CC} Supply voltage	4.5	5	5.5	4.75	5	5.25	V
I_{OH} High-level output current			−0.4			−0.4	mA
I_{OL} Low-level output current			4			8	mA
T_A Operating free-air temperature	−55		125	0		70	°C

electrical characteristics over recommended operating free-air temperature range (unless otherwise noted)

PARAMETER	TEST CONDITIONS†		SN54LS14			SN74LS14			UNIT
			MIN	TYP‡	MAX	MIN	TYP‡	MAX	
V_{T+}	V_{CC} = 5 V		1.4	1.6	1.9	1.4	1.6	1.9	V
V_{T-}	V_{CC} = 5 V		0.5	0.8	1	0.5	0.8	1	V
Hysteresis ($V_{T+} - V_{T-}$)	V_{CC} = 5 V		0.4	0.8		0.4	0.8		V
V_{IK}	V_{CC} = MIN, I_I = −18 mA				−1.5			−1.5	V
V_{OH}	V_{CC} = MIN, V_I = 0.5 V,	I_{OH} = −0.4 mA	2.5	3.4		2.7	3.4		V
V_{OL}	V_{CC} = MIN, V_I = 1.9 V	I_{OL} 4 mA		0.25	0.4		0.25	0.4	V
		I_{OL} 8 mA					0.35	0.5	
I_{T+}	V_{CC} = 5 V, V_I = V_{T+}			−0.14			−0.14		mA
I_{T-}	V_{CC} = 5 V, V_I = V_{T-}			−0.18			−0.18		mA
I_I	V_{CC} = MAX, V_I = 7 V				0.1			0.1	mA
I_{IH}	V_{CC} = MAX, V_{IH} = 2.7 V				20			20	μA
I_{IL}	V_{CC} = MAX, V_{IL} = 0.4 V				−0.4			−0.4	mA
I_{OS}§	V_{CC} = MAX		−20		−100	−20		−100	mA
I_{CCH}	V_{CC} = MAX			8.6	16		8.6	16	mA
I_{CCL}	V_{CC} = MAX			12	21		12	21	mA

† For conditions shown as MIN or MAX, use the appropriate value specified under recommended operating conditions.
‡ All typical values are at V_{CC} = 5 V, T_A = 25°C.
§ Not more than one output should be shorted at a time, and duration of the short-circuit should not exceed one second.

switching characteristics, V_{CC} = 5 V, T_A = 25°C

PARAMETER	FROM (INPUT)	TO (OUTPUT)	TEST CONDITIONS	MIN	TYP	MAX	UNIT
t_{PLH}	A	Y	R_L = 2 kΩ, C_L = 15 pF		15	22	ns
t_{PHL}					15	22	ns

TEXAS INSTRUMENTS
POST OFFICE BOX 655012 • DALLAS, TEXAS 75265

PARAMETER MEASUREMENT INFORMATION

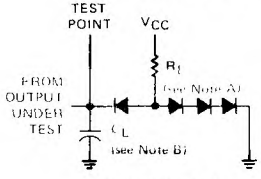

LOAD CIRCUIT

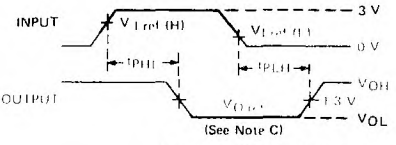

VOLTAGE WAVEFORMS

NOTES A. All diodes are 1N3064 or equivalent.
B. C_L includes probe and jig capacitance.
C. Generator characteristics and reference voltage are

	Generator Characteristics				Reference Voltages		
	Z_{out}	PRR	t_r	t_f	$V_{I\,ref(H)}$	$V_{I\,ref(L)}$	$V_{O\,ref}$
SN54'/SN74'	50 Ω	1 MHz	10 ns	10 ns	1.7 V	0.9 V	1.5 V
SN54LS'/SN74LS'	50 Ω	1 MHz	15 ns	6 ns	1.6 V	0.8 V	1.3 V

TYPICAL CHARACTERISTICS OF '14 CIRCUITS

POSITIVE-GOING THRESHOLD VOLTAGE
vs
FREE-AIR TEMPERATURE

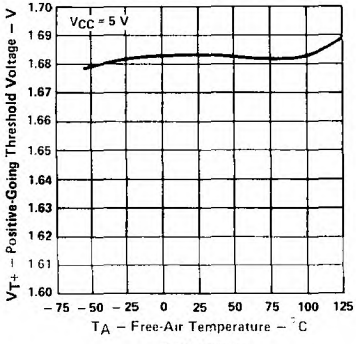

FIGURE 1

NEGATIVE-GOING THRESHOLD VOLTAGE
vs
FREE-AIR TEMPERATURE

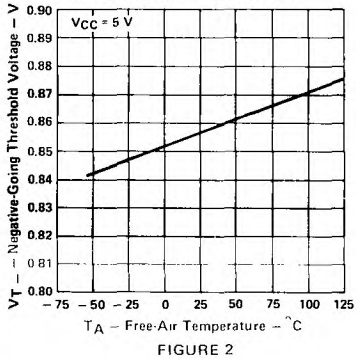

FIGURE 2

HYSTERESIS
vs
FREE-AIR TEMPERATURE

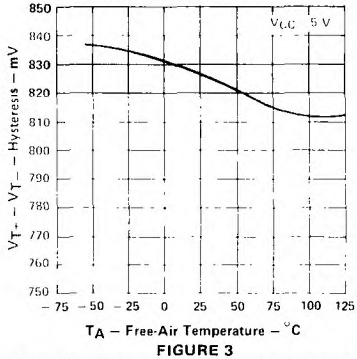

FIGURE 3

Data for temperatures below 0°C and 70°C and supply voltages below 4.75V and above 5.25 V are applicable for SN5414 only.

TYPICAL CHARACTERISTICS OF '14 CIRCUITS

DISTRIBUTION OF UNITS
FOR HYSTERESIS

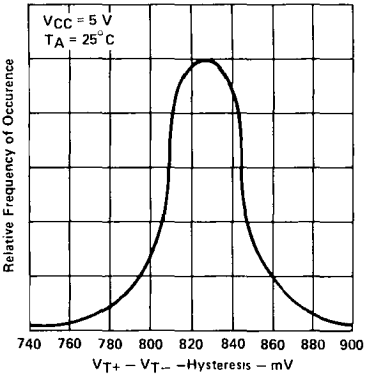

FIGURE 4

THRESHOLD VOLTAGES
vs
SUPPLY VOLTAGE

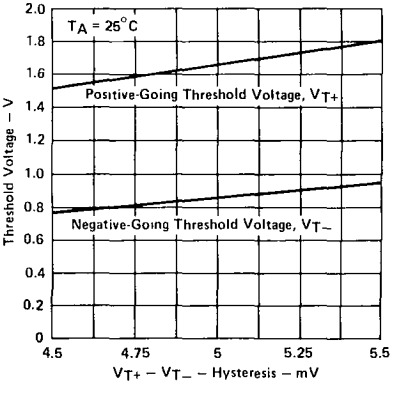

FIGURE 5

HYSTERESIS
vs
SUPPLY VOLTAGE

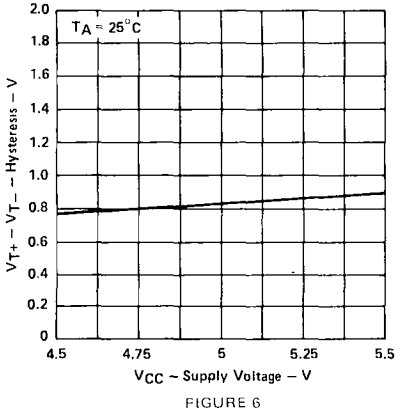

FIGURE 6

OUTPUT VOLTAGE
vs
INPUT VOLTAGE

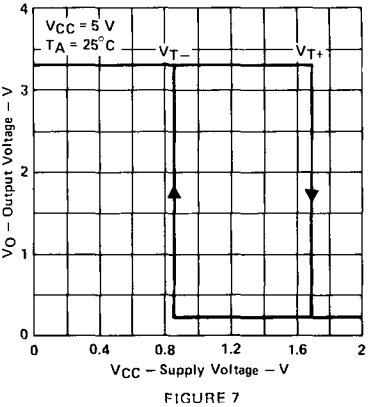

FIGURE 7

Data for temperatures below 0°C and 70°C and supply voltages below 4.75 V and above 5.25 V are applicable for SN5414 only.

TEXAS INSTRUMENTS
POST OFFICE BOX 655012 • DALLAS, TEXAS 75265

TYPICAL CHARACTERISTICS OF 'LS14 CIRCUITS

POSITIVE-GOING THRESHOLD VOLTAGE
vs
FREE-AIR TEMPERATURE

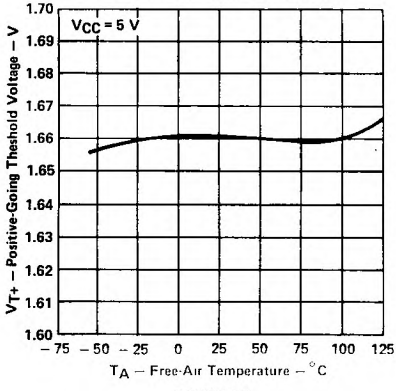

FIGURE 8

NEGATIVE-GOING THRESHOLD VOLTAGE
vs
FREE-AIR TEMPERATURE

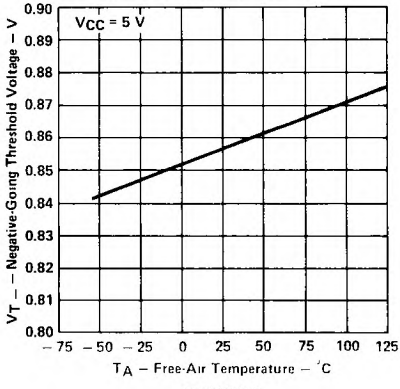

FIGURE 9

HYSTERESIS
vs
FREE-AIR TEMPERATURE

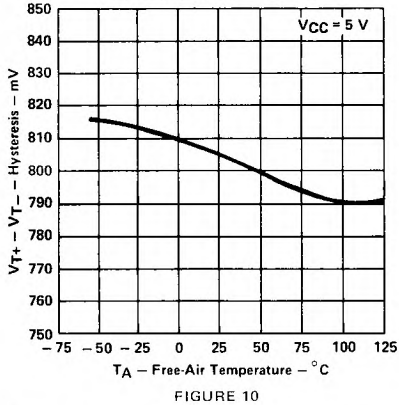

FIGURE 10

DISTRIBUTION OF UNITS
FOR HYSTERESIS

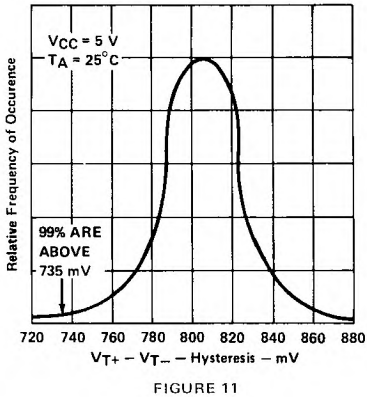

FIGURE 11

Data for temperatures below 0°C and above 70°C and supply voltages below 4.75 V and above 5.25 V are applicable for SN54LS14 only.

TYPICAL CHARACTERISTICS OF 'LS14 CIRCUITS

THRESHOLD VOLTAGES AND HYSTERESIS
vs
SUPPLY VOLTAGE

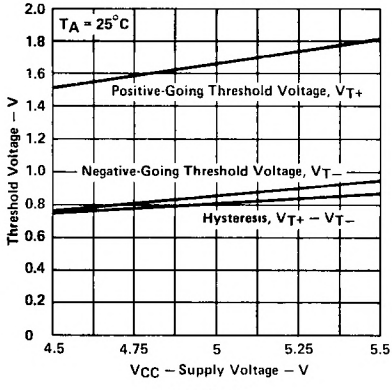

FIGURE 12

OUTPUT VOLTAGE
vs
INPUT VOLTAGE

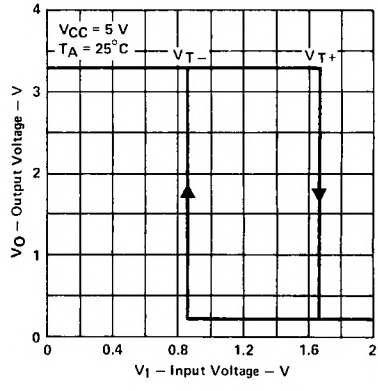

FIGURE 13

Data for temperatures below 0°C and above 70°C and supply voltages below 4.75 V and above 5.25 V are applicable for SN54LS14 only.

TEXAS INSTRUMENTS
POST OFFICE BOX 655012 • DALLAS, TEXAS 75265

TYPICAL APPLICATION DATA

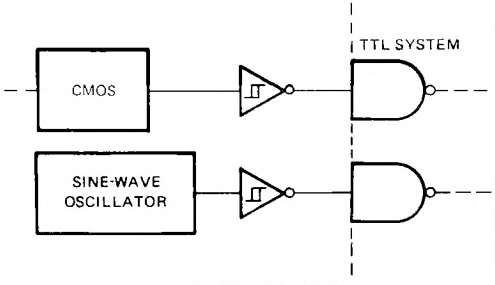

TTL SYSTEM INTERFACE
FOR SLOW INPUT WAVEFORMS

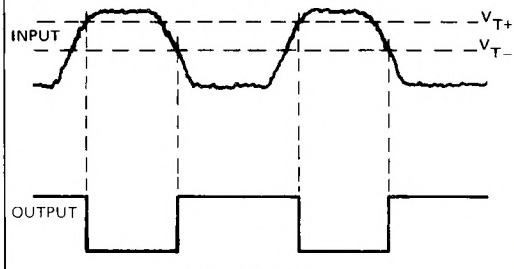

PULSE SHAPER

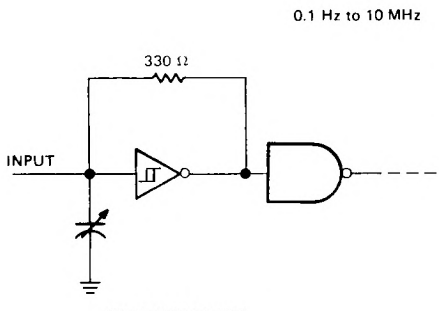

MULTIVIBRATOR

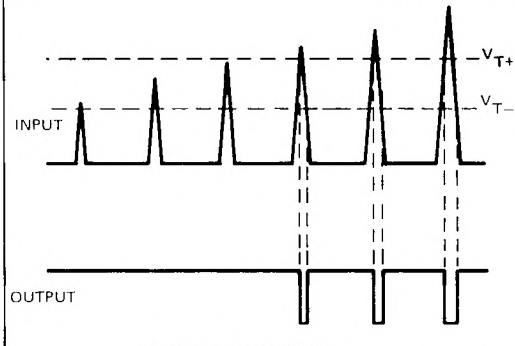

THRESHOLD DETECTOR

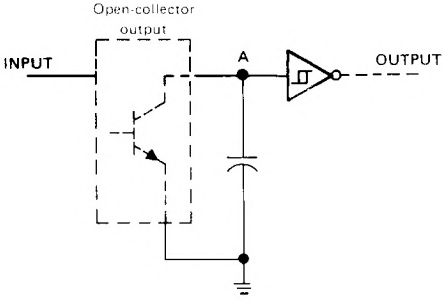

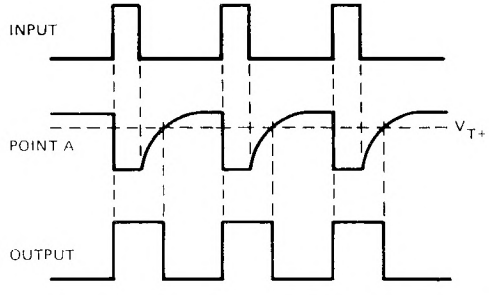

PULSE STRETCHER

TRIPLE 3-INPUT POSITIVE-AND GATES WITH OPEN-COLLECTOR OUTPUTS

APRIL 1985—REVISED MARCH 1988

- **Package Options Include Plastic "Small Outline" Packages, Ceramic Chip Carriers and Flat Packages, and Plastic and Ceramic DIPs**
- **Dependable Texas Instruments Quality and Reliability**

description

These devices contain three independent 3-input AND gates with open-collector outputs. The open-collector outputs require pull-up resistors to perform correctly. They may be connected to other open-collector outputs to implement active-low wired-OR or active-high wired-AND functions. Open-collector devices are often used to generate high V_{OH} levels.

The SN54LS15 and SN54S15 are characterized for operation over the full military temperature range of −55°C to 125°C. The SN74LS15 and SN74S15 are characterized for operation from 0°C to 70°C.

FUNCTION TABLE (each gate)

INPUTS			OUTPUT
A	B	C	Y
H	H	H	H
L	X	X	L
X	L	X	L
X	X	L	L

logic symbol†

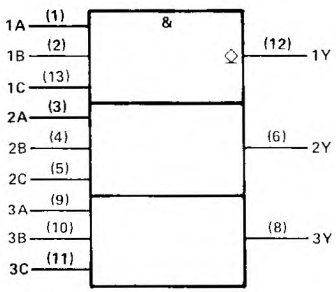

† This symbol is in accordance with ANSI/IEEE Std 91-1984 and IEC Publication 617-12.
Pin numbers shown are for D, J, N, and W packages.

SN54LS15, SN54S15 . . . J OR W PACKAGE
SN74LS15, SN74S15 . . . D OR N PACKAGE
(TOP VIEW)

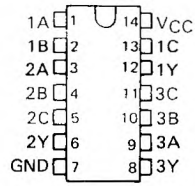

SN54LS15, SN54S15 . . . FK PACKAGE
(TOP VIEW)

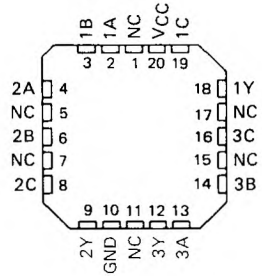

NC – No internal connection

logic diagram (positive logic)

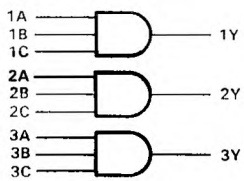

$Y = A \cdot B \cdot C$ or

$Y = \overline{\overline{A} + \overline{B} + \overline{C}}$

2 TTL Devices

PRODUCTION DATA documents contain information current as of publication date. Products conform to specifications per the terms of Texas Instruments standard warranty. Production processing does not necessarily include testing of all parameters.

schematics (each gate)

'LS15

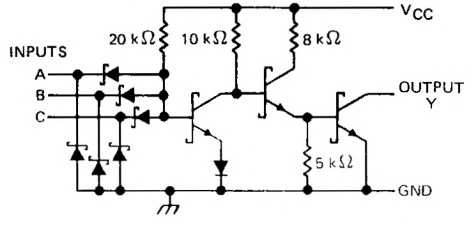

'S15

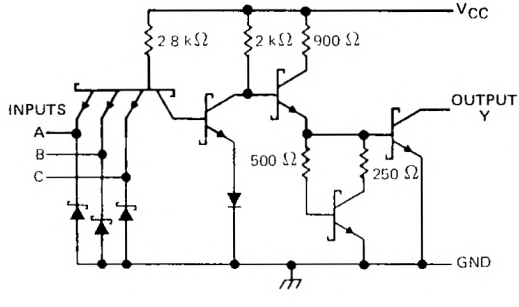

Resistor values shown are nominal.

absolute maximum ratings over operating free-air temperature range (unless otherwise noted)

Supply voltage, V_{CC} (See Note 1) . . . . . 7 V
Input voltage: 'S15 . . . . . 5.5 V
'LS15 . . . . . 7 V
Off-state output voltage . . . . . 7 V
Operating free-air temperature range: SN54' . . . . . −55°C to 125°C
SN74' . . . . . 0°C to 70°C
Storage temperature range . . . . . −65°C to 150°C

NOTE 1: Voltage values are with respect to network ground terminal.

TEXAS INSTRUMENTS
POST OFFICE BOX 655012 • DALLAS, TEXAS 75265

recommended operating conditions

	SN54LS15			SN74LS15			UNIT
	MIN	NOM	MAX	MIN	NOM	MAX	
V_{CC} Supply voltage	4.5	5	5.5	4.75	5	5.25	V
V_{IH} High-level input voltage	2			2			V
V_{IL} Low-level input voltage			0.7			0.8	V
V_{OH} High-level output voltage			5.5			5.5	V
I_{OL} Low-level output current			4			8	mA
T_A Operating free-air temperature	−55		125	0		70	°C

electrical characteristics over recommended operating free-air temperature range (unless otherwise noted)

PARAMETER	TEST CONDITIONS†	SN54LS15			SN74LS15			UNIT
		MIN	TYP‡	MAX	MIN	TYP‡	MAX	
V_{IK}	V_{CC} = MIN, I_I = −18 mA			−1.5			−1.5	V
I_{OH}	V_{CC} = MIN, V_{IH} = 2 V, V_{OH} = 5.5 V			0.1			0.1	mA
V_{OL}	V_{CC} = MIN, V_{IH} = 2 V, I_{OL} = 4 mA		0.25	0.4		0.25	0.4	V
	V_{CC} = MIN, V_{IH} = 2 V, I_{OL} = 8 mA					0.35	0.5	
I_I	V_{CC} = MAX, V_I = 7 V			0.1			0.1	mA
I_{IH}	V_{CC} = MAX, V_I = 2.7 V			20			20	μA
I_{IL}	V_{CC} = MAX, V_I = 0.4 V			−0.4			−0.4	mA
I_{CCH}	V_{CC} = MAX, V_I = 4.5 V		1.8	3.6		1.8	3.6	mA
I_{CCL}	V_{CC} = MAX, V_I = 0 V		3.3	6.6		3.3	6.6	mA

† For conditions shown as MIN or MAX, use the appropriate value specified under recommended operating conditions.
‡ All typical values are at V_{CC} = 5 V, T_A = 25°C.

switching characteristics, V_{CC} = 5 V, T_A = 25°C (see note 2)

PARAMETER	FROM (INPUT)	TO (OUTPUT)	TEST CONDITIONS	MIN	TYP	MAX	UNIT
t_{PLH}	A, B, or C	Y	R_L = 2 kΩ, C_L = 15 pF		20	35	ns
t_{PHL}					17	35	ns

NOTE 2: Load circuits and voltage waveforms are shown in Section 1.

recommended operating conditions

	SN54S15			SN74S15			UNIT
	MIN	NOM	MAX	MIN	NOM	MAX	
V_{CC} Supply voltage	4.5	5	5.5	4.75	5	5.25	V
V_{IH} High-level input voltage	2			2			V
V_{IL} Low-level input voltage			0.8			0.8	V
V_{OH} High-level output voltage			5.5			5.5	V
I_{OL} Low-level output current			20			20	mA
T_A Operating free-air temperature	−55		125	0		70	°C

electrical characteristics over recommended operating free-air temperature range (unless otherwise noted)

PARAMETER	TEST CONDITIONS†	MIN	TYP‡	MAX	UNIT
V_{IK}	V_{CC} = MIN, I_I = −18 mA			−1.2	V
I_{OH}	V_{CC} = MIN, V_{IH} = 2 V, V_{OH} = 5.5 V			0.25	mA
V_{OL}	V_{CC} = MIN, V_{IH} = 2 V, I_{OL} = 20 mA			0.5	V
I_I	V_{CC} = MAX, V_I = 5.5 V			1	mA
I_{IH}	V_{CC} = MAX, V_I = 2.7 V			50	μA
I_{IL}	V_{CC} = MAX, V_I = 0.5 V			2	mA
I_{CCH}	V_{CC} = MAX, V_I = 4.5 V		10.5	19.5	mA
I_{CCL}	V_{CC} = MAX, V_I = 0 V		24	42	mA

† For conditions shown as MIN or MAX, use the appropriate value specified under recommended operating conditions.
‡ All typical values are at V_{CC} = 5 V, T_A = 25°C.

switching characteristics, V_{CC} = 5 V, T_A = 25°C (see note 2)

PARAMETER	FROM (INPUT)	TO (OUTPUT)	TEST CONDITIONS	MIN	TYP	MAX	UNIT
t_{PLH}	A, B, or C	Y	R_L = 280 Ω, C_L = 15 pF		5.5	8.5	ns
t_{PHL}					6	9	ns
t_{PLH}			R_L = 280 Ω, C_L = 50 pF		8.5		ns
t_{PHL}					8		ns

NOTE 2: Load circuits and voltage waveforms are shown in Section 1.

TEXAS INSTRUMENTS
POST OFFICE BOX 655012 • DALLAS, TEXAS 75265

- **Functionally and Mechanically Identical to 'LS13, 'LS14, and 'LS132, Respectively**
- **Improved Line-Receiving Characteristics**
- P-N-P Inputs Reduce System Loading
- **Excellent Noise Immunity with Typical Hysteresis of 0.8 V**

SN74LS19A . . . D, J, OR N PACKAGE
(TOP VIEW)

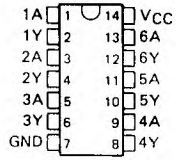

SN74LS24A . . . D, J, OR N PACKAGE
(TOP VIEW)

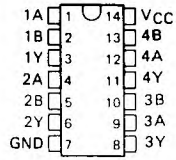

description

Each circuit functions as a NAND gate or inverter, but because of the Schmitt action, it has different input threshold levels for positive-going (V_{T+}) and for negative-going (V_{T-}) signals. The hysteresis or backlash, which is the difference between the two threshold levels ($V_{T+} - V_{T-}$), is typically 800 millivolts.

These circuits are temperature-compensated and can be triggered from the slowest of input ramps and still give clean, jitter-free output signals.

logic symbols†

SN74LS19A

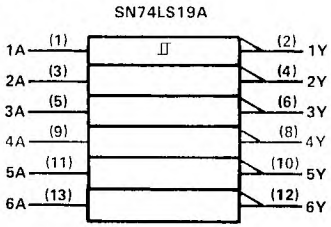

SN74LS24A

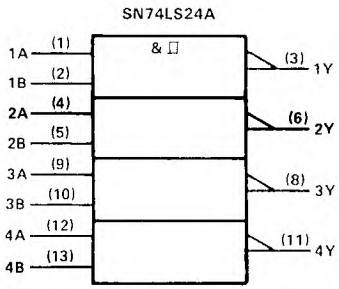

logic diagrams (positive logic)

SN74LS19A

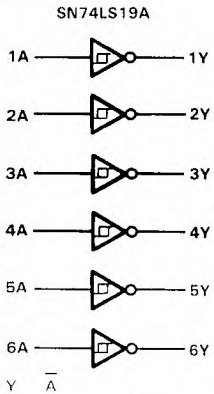

SN74LS24A

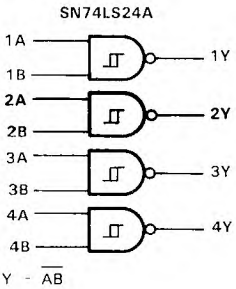

† These symbols are in accordance with ANSI/IEEE Std 91-1984 and IEC Publication 617-12.

PRODUCTION DATA documents contain information current as of publication date. Products conform to specifications per the terms of Texas Instruments standard warranty. Production processing does not necessarily include testing of all parameters.

schematic (each gate)

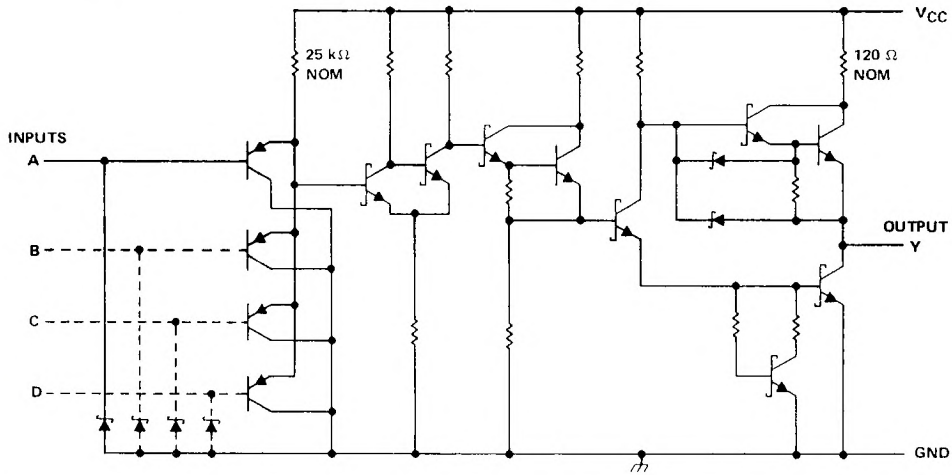

absolute maximum ratings over operating free-air temperature range (unless otherwise noted)

Supply voltage, V_{CC} (see Note 1) . . . . . 7 V
Input voltage . . . . . 7 V
Operating free-air temperature range . . . . . 0°C to 70°C
Storage temperature range . . . . . −65°C to 150°C

recommended operating conditions

	MIN	NOM	MAX	UNIT
Supply voltage, V_{CC}	4.75	5	5.25	V
High-level output current, I_{OH}			−400	μA
Low-level output current, I_{OL}			8	mA
Operating free-air temperature, T_A	0		70	°C

electrical characteristics over recommended operating free-air temperature range (unless otherwise noted)

PARAMETER	TEST CONDITIONS†		MIN	TYP‡	MAX	UNIT
V_{T+}	V_{CC} = 5 V		1.65	1.9	2.15	V
V_{T-}	V_{CC} = 5 V		0.75	1.0	1.25	V
Hysteresis ($V_{T+} - V_{T-}$)	V_{CC} = 5 V		0.4	0.9		V
V_{IK}	V_{CC} = MIN, I_I = −18 mA			−1.5		V
V_{OH}	V_{CC} = MIN, V_I = V_{T-min}	I_{OH} = −0.4 mA	2.7	3.4		V
V_{OL}	V_{CC} = MIN, V_I = V_{T+max}	I_{OL} = 4 mA		0.25	0.4	V
		I_{OL} = 8 mA		0.35	0.5	
I_{T+}	V_{CC} = 5 V, V_I = V_{T+}			−2	−20	μA
I_{T-}	V_{CC} = 5 V, V_I = V_{T-}			−5	−30	μA
I_I	V_{CC} = MAX, V_I = 7 V			0.1		mA
I_{IH}	V_{CC} = MAX, V_I = 2.7 V				20	μA
I_{IL}	V_{CC} = MAX, V_I = 0.4 V				−50	μA
I_{OS}§	V_{CC} MAX, V_I V_O 0 V		20		100	mA
I_{CCH}	V_{CC} = MAX, V_I = 0 V	'LS19A		9 9	18	mA
		'LS24A		6.6	12	
I_{CCL}	V_{CC} = MAX, V_I = 4.5 V	'LS19A		17	30	mA
		'LS24A		11	20	

† For conditions shown as MIN or MAX, use the appropriate value specified under recommended operating conditions.
‡ All typical values are at V_{CC} = 5 V, T_A = 25°C.
§ Not more than one output should be shorted at a time, and the duration of the short-circuit should not exceed one second.

switching characteristics, V_{CC} = 5 V, T_A = 25°C (see Figure 1)

PARAMETER	FROM (INPUT)	TO (OUTPUT)	TEST CONDITIONS	SN74LS19A			SN74LS24A			UNIT
				MIN	TYP	MAX	MIN	TYP	MAX	
t_{PLH}	Any	Y	R_L = 2 kΩ, C_L = 15 pF		13	20		13	20	ns
t_{PHL}	Any	Y			18	30		25	40	ns

t_{PLH} = Propagation delay time, low-to-high-level output
t_{PHL} = Propagation delay time, high-to-low-level output

PARAMETER MEASUREMENT INFORMATION

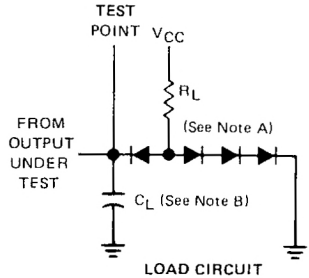

LOAD CIRCUIT

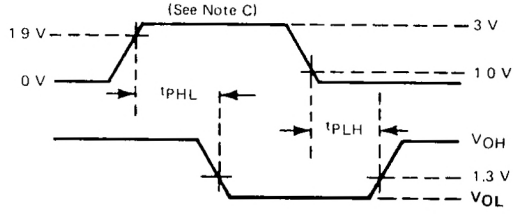

VOLTAGE WAVEFORMS

NOTES: A. All diodes are IN3064 or equivalent.
B. C_L includes probe and circuit capacitance.
C. The generator characteristics are: PRR = 1 MHz, t_r = 15 ns, t_p = 6 ns, Z_o = 50 Ω.

FIGURE 1

TEXAS INSTRUMENTS
POST OFFICE BOX 655012 • DALLAS, TEXAS 75265

- Package Options Include Plastic "Small Outline" Packages, Ceramic Chip Carriers and Flat Packages, and Plastic and Ceramic DIPs
- Dependable Texas Instruments Quality and Reliability

description

These devices contain two independent 4-input NAND gates.

The SN5420, SN54LS20, and SN54S20 are characterized for operation over the full military range of −55°C to 125°C. The SN7420, SN74LS20, and SN74S20 are characterized for opertion from 0°C to 70°C.

FUNCTION TABLE (each gate)

INPUTS				OUTPUT
A	B	C	D	Y
H	H	H	H	L
L	X	X	X	H
X	L	X	X	H
X	X	L	X	H
X	X	X	L	H

logic symbol†

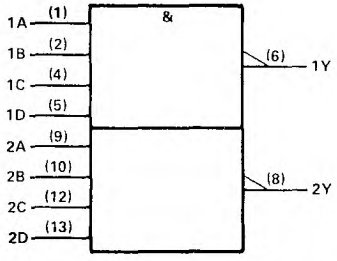

†This symbol is in accordance with ANSI/IEEE Std 91-1984 and IEC Publication 617-12.
Pin numbers shown are for D, J, N, and W packages.

SN5420 . . . J PACKAGE
SN54LS20, SN54S20 . . . J OR W PACKAGE
SN7420 . . . N PACKAGE
SN74LS20, SN74S20 . . . D OR N PACKAGE
(TOP VIEW)

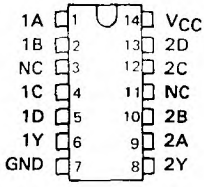

SN5420 . . . W PACKAGE
(TOP VIEW)

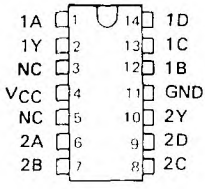

SN54LS20, SN54S20 . . . FK PACKAGE
(TOP VIEW)

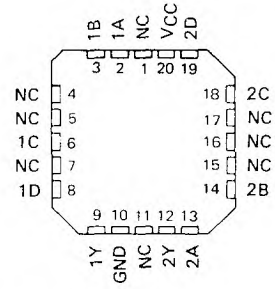

NC - No internal connection

logic diagram

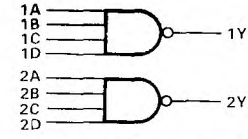

positive logic $Y = \overline{A \cdot B \cdot C \cdot D}$ or $Y = \overline{A} + \overline{B} + \overline{C} + \overline{D}$

2 TTL Devices

PRODUCTION DATA documents contain information current as of publication date. Products conform to specifications per the terms of Texas Instruments standard warranty. Production processing does not necessarily include testing of all parameters.

schematics (each gate)

'20

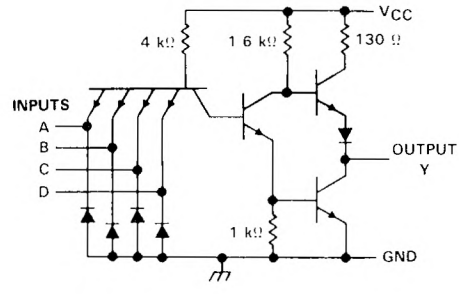

'LS20

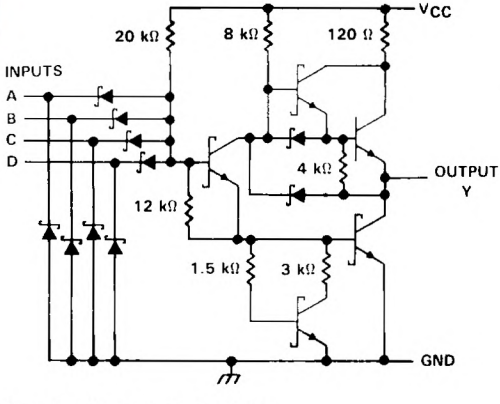

'S20

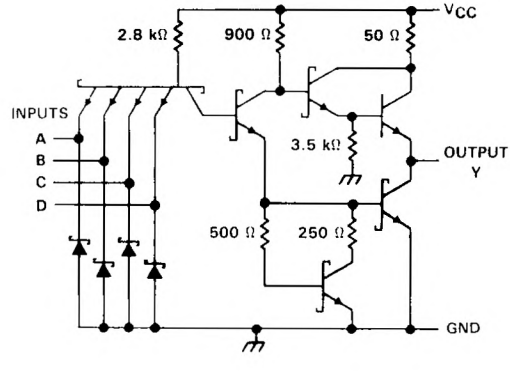

Resistor values shown are nominal.

absolute maximum ratings over operating free-air temperature range (unless otherwise noted)

Supply voltage, V_{CC} (see Note 1) . . . . . 7 V
Input voltage: '20, 'S20 . . . . . **5.5 V**
'LS20 . . . . . 7 V
Operating free-air temperature range: SN54' . . . . . **−55°C to 125°C**
SN74' . . . . . 0°C to 70°C
Storage temperature range . . . . . −65°C to 150°C

NOTE 1: Voltage values are with respect to network ground terminals.

TEXAS INSTRUMENTS
POST OFFICE BOX 655012 • DALLAS, TEXAS 75265

recommended operating conditions

		SN5420			SN7420			UNIT
		MIN	NOM	MAX	MIN	NOM	MAX	
V_{CC}	Supply voltage	4.5	5	5.5	4.75	5	5.25	V
V_{IH}	High-level input voltage	2			2			V
V_{IL}	Low-level input voltage			0.8			0.8	V
I_{OH}	High-level output current			−0.4			−0.4	mA
I_{OL}	Low-level output current			16			16	mA
T_A	Operating free-air temperature	−55		125	0		70	°C

electrical characteristics over recommended operating free-air temperature range (unless otherwise noted)

PARAMETER	TEST CONDITIONS†	SN5420			SN7420			UNIT
		MIN	TYP‡	MAX	MIN	TYP‡	MAX	
V_{IK}	V_{CC} = MIN, I_I = −12 mA			−1.5			−1.5	V
V_{OH}	V_{CC} = MIN, V_{IL} = 0.8 V, I_{OH} = −0.4 mA	2.4	3.4		2.4	3.4		V
V_{OL}	V_{CC} = MIN, V_{IH} = 2 V, I_{OL} = 16 mA		0.2	0.4		0.2	0.4	V
I_I	V_{CC} = MAX, V_I = 5.5 V			1			1	mA
I_{IH}	V_{CC} = MAX, V_I = 2.4 V			40			40	μA
I_{IL}	V_{CC} = MAX, V_I = 0.4 V			−1.6			−1.6	mA
I_{OS}§	V_{CC} = MAX	−20		−55	−18		−55	mA
I_{CCH}	V_{CC} = MAX, V_I = 0 V		2	4		2	4	mA
I_{CCL}	V_{CC} = MAX, V_I = 4.5 V		6	11		6	11	mA

† For conditions shown as MIN or MAX, use the appropriate value specified under recommended operating conditions.
‡ All typical values are at V_{CC} = 5 V, T_A = 25°C.
§ Not more than one output should be shorted at a time

switching characteristics, V_{CC} = 5 V, T_A = 25°C (see note 2)

PARAMETER	FROM (INPUT)	TO (OUTPUT)	TEST CONDITIONS	MIN	TYP	MAX	UNIT
t_{PLH}	Any	Y	R_L = 400 Ω, C_L = 15 pF		12	22	ns
t_{PHL}					8	15	ns

NOTE 2: Load circuits and voltage waveforms are shown in Section 1.

recommended operating conditions

		SN54LS20			SN74LS20			UNIT
		MIN	NOM	MAX	MIN	NOM	MAX	
V_{CC}	Supply voltage	4.5	5	5.5	4.75	5	5.25	V
V_{IH}	High-level input voltage	2			2			V
V_{IL}	Low-level input voltage			0.7			0.8	V
I_{OH}	High-level output current			−0.4			−0.4	mA
I_{OL}	Low-level output current			4			8	mA
T_A	Operating free-air temperature	−55		125	0		70	°C

electrical characteristics over recommended operating free-air temperature range (unless otherwise noted)

PARAMETER	TEST CONDITIONS †			SN54LS20			SN74LS20			UNIT
				MIN	TYP‡	MAX	MIN	TYP‡	MAX	
V_{IK}	V_{CC} = MIN,	I_I = −18 mA				−1.5			−1.5	V
V_{OH}	V_{CC} = MIN,	V_{IL} = MAX,	I_{OH} = −0.4 mA	2.5	3.4		2.7	3.4		V
V_{OL}	V_{CC} = MIN,	V_{IH} = 2 V,	I_{OL} = 4 mA		0.25	0.4			0.4	V
	V_{CC} = MIN,	V_{IH} = 2 V,	I_{OL} = 8 mA					0.25	0.5	
I_I	V_{CC} = MAX,	V_I = 7 V				0.1			0.1	mA
I_{IH}	V_{CC} = MAX,	V_I = 2.7 V				20			20	µA
I_{IL}	V_{CC} = MAX,	V_I = 0.4 V				−0.4			−0.4	mA
I_{OS}§	V_{CC} = MAX			−20		−100	−20		−100	mA
I_{CCH}	V_{CC} = MAX,	V_I = 0 V			0.4	0.8		0.4	0.8	mA
I_{CCL}	V_{CC} = MAX,	V_I = 4.5 V			1.2	2.2		1.2	2.2	mA

† For conditions shown as MIN or MAX, use the appropriate value specified under recommended operating conditions.
‡ All typical values are at V_{CC} = 5 V, T_A = 25°C.
§ Not more than one output should be shorted at a time, and the duration of the short-circuit should not exceed one second.

switching characteristics, V_{CC} = 5 V, T_A = 25°C (see note 2)

PARAMETER	FROM (INPUT)	TO (OUTPUT)	TEST CONDITIONS		MIN	TYP	MAX	UNIT
t_{PLH}	Any	Y	R_L = 2 kΩ,	C_L = 15 pF		9	15	ns
t_{PHL}						10	15	ns

NOTE 2: Load circuits and voltage waveforms are shown in Section 1.

TEXAS INSTRUMENTS
POST OFFICE BOX 655012 • DALLAS, TEXAS 75265

recommended operating conditions

		SN54S20			SN74S20			UNIT
		MIN	NOM	MAX	MIN	NOM	MAX	
V_{CC}	Supply voltage	4.5	5	5.5	4.75	5	5.25	V
V_{IH}	High-level input voltage	2			2			V
V_{IL}	Low-level input voltage			0.8			0.8	V
I_{OH}	High-level output current			−1			−1	mA
I_{OL}	Low-level output current			20			20	mA
T_A	Operating free-air temperature	−55		125	0		70	°C

electrical characteristics over recommended operating free-air temperature range (unless otherwise noted)

PARAMETER	TEST CONDITIONS †			SN54S20			SN74S20			UNIT
				MIN	TYP‡	MAX	MIN	TYP‡	MAX	
V_{IK}	V_{CC} = MIN,	I_I = −18 mA				−1.2			−1.2	V
V_{OH}	V_{CC} = MIN,	V_{IL} = 0.8 V,	I_{OH} = −1 mA	2.5	3.4		2.7	3.4		V
V_{OL}	V_{CC} = MIN,	V_{IH} = 2 V,	I_{OL} = 20 mA			0.5			0.5	V
I_I	V_{CC} = MAX,	V_I = 5.5 V				1			1	mA
I_{IH}	V_{CC} = MAX,	V_I = 2.7 V				50			50	μA
I_{IL}	V_{CC} = MAX,	V_I = 0.5 V				−2			−2	mA
I_{OS}§	V_{CC} = MAX			−40		−100	−40		−100	mA
I_{CCH}	V_{CC} = MAX,	V_I = 0 V			5	8		5	8	mA
I_{CCL}	V_{CC} = MAX,	V_I = 4.5 V			10	18		10	18	mA

† For conditions shown as MIN or MAX, use the appropriate value specified under recommended operating conditions.
‡ All typical values are at V_{CC} = 5 V, T_A = 25°C.
§ Not more than one output should be shorted at a time, and the duration of the short-circuit should not exceed one second.

switching characteristics, V_{CC} = 5 V, T_A = 25°C (see note 2)

PARAMETER	FROM (INPUT)	TO (OUTPUT)	TEST CONDITIONS		MIN	TYP	MAX	UNIT
t_{PLH}	A, B, C or D	Y	R_L = 280 Ω,	C_L = 15 pF		3	4.5	ns
t_{PHL}						3	5	ns
t_{PLH}			R_L = 280 Ω,	C_L = 50 pF		4.5		ns
t_{PHL}						5		ns

NOTE 2: Load circuits and voltage waveforms are shown in Section 1.

APRIL 1985 – REVISED MARCH 1988

- **Package Options Include Plastic "Small Outline" Packages, Ceramic Chip Carriers and Flat Packages, and Plastic and Ceramic DIPs**
- **Dependable Texas Instruments Quality and Reliability**

description

These devices contain two independent 4-input AND gates.

The SN54LS21 is characterized for operation over the full military temperature range of −55°C to 125°C. The SN74LS21 is characterized for operation from 0°C to 70°C.

FUNCTION TABLE (each gate)

INPUTS				OUTPUT
A	B	C	D	Y
H	H	H	H	H
L	X	X	X	L
X	L	X	X	L
X	X	L	X	L
X	X	X	L	L

SN54LS21 . . . J OR W PACKAGE
SN74LS21 . . . D OR N PACKAGE
(TOP VIEW)

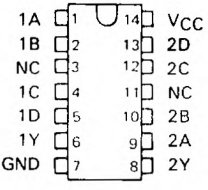

SN54LS21 . . . FK PACKAGE
(TOP VIEW)

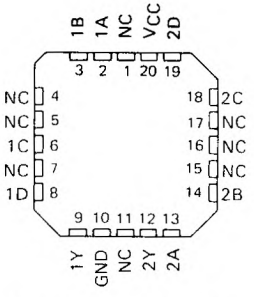

NC – No internal connection

logic symbol†

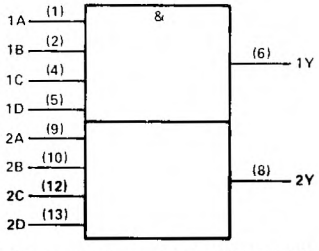

† This symbol is in accordance with ANSI/IEEE Std 91-1984 and IEC Publication 617-12.
Pin numbers shown are for D, J, N, and W packages.

logic diagram

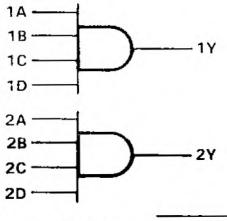

(positive logic) $Y = A \cdot B \cdot C \cdot D$ or $Y = \overline{\overline{A} + \overline{B} + \overline{C} + \overline{D}}$

PRODUCTION DATA documents contain information current as of publication date. Products conform to specifications per the terms of Texas Instruments standard warranty. Production processing does not necessarily include testing of all parameters.

schematics (each gate)

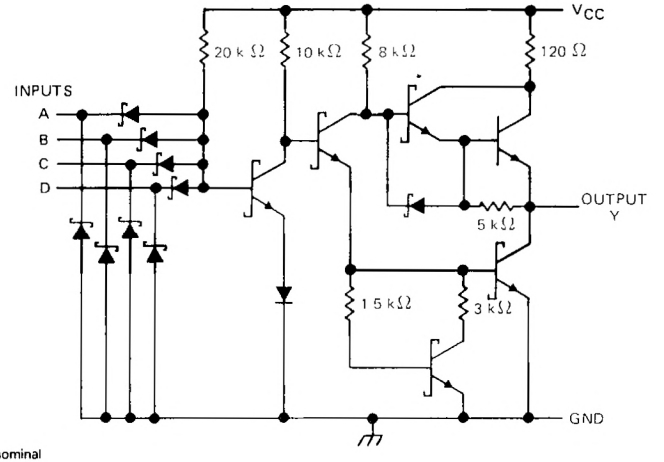

Resistor values shown are nominal

absolute maximum ratings over operating free-air temperature range (unless otherwise noted)

Supply voltage, V_{CC} (see Note 1) . . . . . 7 V
Input voltage . . . . . 7 V
Operating free-air temperature range: SN54' . . . . . −55°C to 125°C
SN74' . . . . . 0°C to 70°C
Storage temperature range . . . . . −65°C to 150°C

NOTE 1: Voltage values are with respect to network ground terminals.

TEXAS INSTRUMENTS
POST OFFICE BOX 655012 • DALLAS, TEXAS 75265

recommended operating conditions

	SN54LS21			SN74LS21			UNIT
	MIN	NOM	MAX	MIN	NOM	MAX	
V_{CC} Supply voltage	4.5	5	5.5	4.75	5	5.25	V
V_{IH} High-level input voltage	2			2			V
V_{IL} Low-level input voltage			0.7			0.8	V
I_{OH} High-level output current			−0.4			−0.4	mA
I_{OL} Low-level output current			4			8	mA
T_A Operating free-air temperature	−55		125	0		70	°C

electrical characteristics over recommended operating free-air temperature range (unless otherwise noted)

PARAMETER	TEST CONDITIONS †				SN54LS21			SN74LS21			UNIT
					MIN	TYP‡	MAX	MIN	TYP‡	MAX	
V_{IK}	V_{CC} = MIN,	I_I = −18 mA					−1.5			−1.5	V
V_{OH}	V_{CC} = MIN,	V_{IH} = 2 V,	I_{OH} = −0.4 mA		2.5	3.4		2.7	3.4		V
V_{OL}	V_{CC} = MIN,	V_{IL} = MAX,	I_{OL} = 4 mA			0.25	0.4		0.25	0.4	V
	V_{CC} = MIN,	V_{IL} = MAX,	I_{OL} = 8 mA						0.35	0.5	
I_I	V_{CC} = MAX,	V_I = 7 V					0.1			0.1	mA
I_{IH}	V_{CC} = MAX,	V_I = 2.7 V					20			20	μA
I_{IL}	V_{CC} = MAX,	V_I = 0.4 V					−0.4			−0.4	mA
I_{OS}§	V_{CC} = MAX				−20		−100	−20		−100	mA
I_{CCH}	V_{CC} = MAX,	V_I = 4.5 V				1.2	2.4		1.2	2.4	mA
I_{CCL}	V_{CC} = MAX,	V_I = 0 V				2.2	4.4		2.2	4.4	mA

† For conditions shown as MIN or MAX, use the appropriate value specified under recommended operating conditions.
‡ All typical values are at V_{CC} = 5 V, T_A = 25°C
§ Not more than one output should be shorted at a time, and the duration of the short-circuit should not exceed one second

switching characteristics, V_{CC} = 5 V, T_A = 25°C (see note 2)

PARAMETER	FROM (INPUT)	TO (OUTPUT)	TEST CONDITIONS		MIN	TYP	MAX	UNIT
t_{PLH}	Any	Y	R_L = 2 kΩ,	C_L = 15 pF		8	15	ns
t_{PHL}						10	20	ns

NOTE 2: Load circuits and voltage waveforms are shown in Section 1.

DUAL 4-INPUT POSITIVE-NAND GATES WITH OPEN-COLLECTOR OUTPUTS

DECEMBER 1983 – REVISED MARCH 1988

- **Package Options Include Plastic "Small Outline" Packages, Ceramic Chip Carriers and Flat Packages, and Plastic and Ceramic DIPs**
- **Dependable Texas Instruments Quality and Reliability**

description

These devices contain two independent 4-input NAND gates. The open-collector outputs require pull-up resistors to perform correctly. They may be connected to other open-collector outputs to implement active-low wired-OR or active-high wired-AND functions. Open-collector devices are often used to generate higher V_{OH} levels.

The SN5422, SN54LS22 and SN54S22 are characterized for operation over the full military temperature range of −55°C to 125°C. The SN7422, SN74LS22, and SN74S22 are characterized for operation from 0°C to 70°C.

FUNCTION TABLE (each gate)

INPUTS				OUTPUT
A	B	C	D	Y
H	H	H	H	L
L	X	X	X	H
X	L	X	X	H
X	X	L	X	H
X	X	X	L	H

logic symbol†

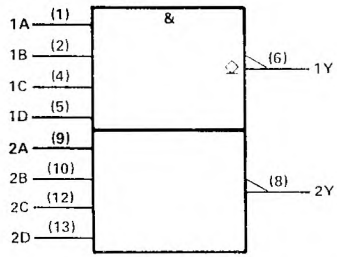

† This symbol is in accordance with ANSI/IEEE Std 91-1984 and IEC Publication 617-12.
Pin numbers shown are for D, J, N, and W packages.

SN5422, SN54LS22, SN54S22 . . . J OR W PACKAGE
SN7422 . . . N PACKAGE
SN74LS22, SN74S22 . . . D OR N PACKAGE
(TOP VIEW)

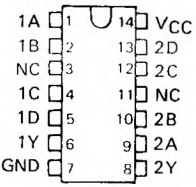

SN54LS22, SN54S22 . . . FK PACKAGE
(TOP VIEW)

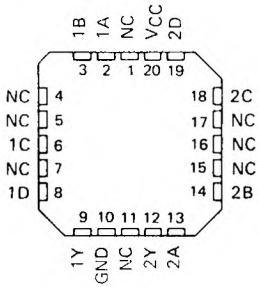

NC No internal connection

logic diagram

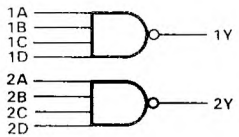

positive logic

$$Y = \overline{A \cdot B \cdot C \cdot D} \text{ or } Y = \overline{A} + \overline{B} + \overline{C} + \overline{D}$$

PRODUCTION DATA documents contain information current as of publication date. Products conform to specifications per the terms of Texas Instruments standard warranty. Production processing does not necessarily include testing of all parameters.

schematics (each gate)

'22

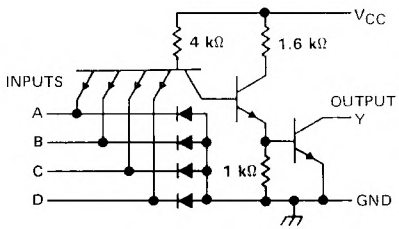

'LS22

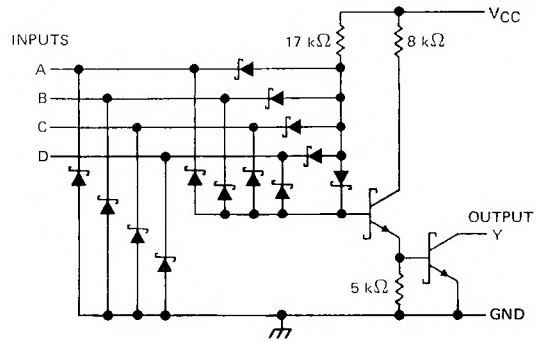

'S22

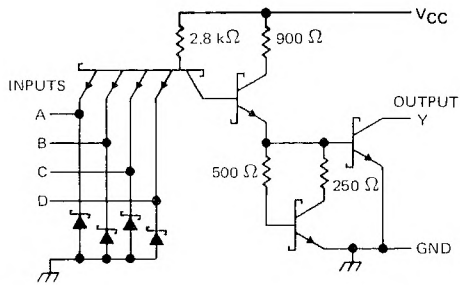

Resistor values shown are nominal

absolute maximum ratings over operating free-air temperature range (unless otherwise noted)

Supply voltage, V_{CC} (See Note 1) . . . . . 7 V
Input voltage: '22, 'S22 . . . . . 5.5 V
'LS22 . . . . . 7 V
Operating free-air temperature range: SN54' . . . . . −55°C to 125°C
SN74' . . . . . 0° C to 70°C
Storage temperature range . . . . . −65°C to 150°C

NOTE 1: Voltage values are with respect to network ground terminal.

TEXAS INSTRUMENTS
POST OFFICE BOX 655012 • DALLAS, TEXAS 75265

recommended operating conditions

	SN5422			SN7422			UNIT
	MIN	NOM	MAX	MIN	NOM	MAX	
V_{CC} Supply voltage	4.5	5	5.5	4.75	5	5.25	V
V_{IH} High-level input voltage	2			2			V
V_{IL} Low-level input voltage			0.8			0.8	V
V_{OH} High-level output voltage			5.5			5.5	V
I_{OL} Low-level output current			16			16	mA
T_A Operating free-air temperature	−55		125	0		70	°C

electrical characteristics over recommended operating free-air temperature range (unless otherwise noted)

PARAMETER	TEST CONDITIONS†	SN5422			SN7422			UNIT
		MIN	TYP‡	MAX	MIN	TYP‡	MAX	
V_{IK}	V_{CC} = MIN, I_I = −12 mA			−1.5			−1.5	V
I_{OH}	V_{CC} = MIN, V_{IL} = 0.8 V, V_{OH} = 5.5 V						0.25	mA
	V_{CC} = MIN, V_{IL} = 0.7 V, V_{OH} = 5.5 V			0.25				
V_{OL}	V_{CC} = MIN, V_{IH} = 2 V, I_{OL} = 16 mA		0.2	0.4		0.2	0.4	V
I_I	V_{CC} = MAX, V_I = 5.5 V			1			1	mA
I_{IH}	V_{CC} = MAX, V_I = 2.4 V			40			40	μA
I_{IL}	V_{CC} = MAX, V_I = 0.4 V			−1.6			−1.6	mA
I_{CCH}	V_{CC} = MAX, V_I = 0		2	4		2	4	mA
I_{CCL}	V_{CC} = MAX, V_I = 4.5 V		6	11		6	11	mA

†For conditions shown as MIN or MAX, use the appropriate value specified under recommended operating conditions.
‡All typical values are at V_{CC} = 5 V, T_A = 25°C.

switching characteristics, V_{CC} = 5 V, T_A = 25°C (see note 2)

PARAMETER	FROM (INPUT)	TO (OUTPUT)	TEST CONDITIONS		MIN	TYP	MAX	UNIT
t_{PLH}	Any	Y	R_L = 4 kΩ,	C_L = 15 pF		35	45	ns
t_{PHL}			R_L = 400 Ω,	C_L = 15 pF		8	15	ns

NOTE 2: Load circuits and voltage waveforms are shown in Section 1

recommended operating conditions

	SN54LS22			SN74LS22			UNIT
	MIN	NOM	MAX	MIN	NOM	MAX	
V_{CC} Supply voltage	4.5	5	5.5	4.75	5	5.25	V
V_{IH} High-level input voltage	2			2			V
V_{IL} Low-level input voltage			0.7			0.8	V
V_{OH} High-level output voltage			5.5			5.5	V
I_{OL} Low-level output current			4			8	mA
T_A Operating free-air temperature	−55		125	0		70	°C

electrical characteristics over recommended operating free-air temperature range (unless otherwise noted)

PARAMETER	TEST CONDITIONS†			SN54LS22			SN74LS22			UNIT
				MIN	TYP‡	MAX	MIN	TYP‡	MAX	
V_{IK}	V_{CC} = MIN,	I_I = −18 mA				−1.5			−1.5	V
I_{OH}	V_{CC} = MIN,	V_{IL} = MAX,	V_{OH} = 5.5 V			0.1			0.1	mA
V_{OL}	V_{CC} = MIN,	V_{IH} = 2 V,	I_{OL} = 4 mA		0.25	0.4		0.25	0.4	V
	V_{CC} = MIN,	V_{IH} = 2 V,	I_{OL} = 8 mA					0.35	0.5	
I_I	V_{CC} = MAX,	V_I = 7 V				0.1			0.1	mA
I_{IH}	V_{CC} = MAX,	V_I = 2.7 V				20			20	μA
I_{IL}	V_{CC} = MAX,	V_I = 0.4 V				−0.4			−0.4	mA
I_{CCH}	V_{CC} = MAX,	V_I = 0			0.4	0.8		0.4	0.8	mA
I_{CCL}	V_{CC} = MAX,	V_I = 4.5 V			1.2	2.2		1.2	2.2	mA

† For conditions shown as MIN or MAX, use the appropriate value specified under recommended operating conditions.
‡ All typical values are at V_{CC} = 5 V, T_A = 25°C.

switching characteristics, V_{CC} = 5 V, T_A = 25°C (see note 2)

PARAMETER	FROM (INPUT)	TO (OUTPUT)	TEST CONDITIONS		MIN	TYP	MAX	UNIT
t_{PLH}	Any	Y	R_L = 2 kΩ,	C_L = 15 pF		17	32	ns
t_{PHL}						15	28	ns

NOTE 2: Load circuits and voltage waveforms are shown in Section 1.

TEXAS INSTRUMENTS
POST OFFICE BOX 655012 • DALLAS, TEXAS 75265

recommended operating conditions

		SN54S22			SN74S22			UNIT
		MIN	NOM	MAX	MIN	NOM	MAX	
V_{CC}	Supply voltage	4.5	5	5.5	4.75	5	5.25	V
V_{IH}	High-level input voltage	2			2			V
V_{IL}	Low-level input voltage			0.8			0.8	V
V_{OH}	High-level output voltage			5.5			5.5	V
I_{OL}	Low-level output current			20			20	mA
T_A	Operating free-air temperature	−55		125	0		70	°C

electrical characteristics over recommended operating free-air temperature range (unless otherwise noted)

PARAMETER	TEST CONDITIONS†	SN54S22			SN74S22			UNIT
		MIN	TYP‡	MAX	MIN	TYP‡	MAX	
V_{IK}	V_{CC} = MIN, I_I = −18 mA			−1.2			−1.2	V
I_{OH}	V_{CC} = MIN, V_{IL} = 0.8 V, V_{OH} = 5.5 V						0.25	mA
	V_{CC} = MIN, V_{IL} = 0.7 V, V_{OH} = 5.5 V			0.25				
V_{OL}	V_{CC} = MIN, V_{IH} = 2 V, I_{OL} = 20 mA			0.5			0.5	V
I_I	V_{CC} = MAX, V_I = 5.5 V			1			1	mA
I_{IH}	V_{CC} = MAX, V_I = 2.7 V			50			50	μA
I_{IL}	V_{CC} = MAX, V_I = 0.5 V			−2			−2	mA
I_{CCH}	V_{CC} = MAX, V_I = 0		3	6.6		3	6.6	mA
I_{CCL}	V_{CC} = MAX, V_I = 4.5 V		10	18		10	18	mA

†For conditions shown as MIN or MAX, use the appropriate value specified under recommended operating conditions.
‡All typical values are at V_{CC} = 5 V, T_A = 25°C.

switching characteristics, V_{CC} = 5 V, T_A = 25°C (see note 2)

PARAMETER	FROM (INPUT)	TO (OUTPUT)	TEST CONDITIONS	MIN	TYP	MAX	UNIT
t_{PLH}	Any	Y	R_L = 280 Ω, C_L = 15 pF	2	5	7.5	ns
t_{PHL}				2	4.5	7	ns
t_{PLH}			R_L = 280 Ω, C_L = 50 pF		7.5		ns
t_{PHL}					7		ns

NOTE 2: Load circuits and voltage waveforms are shown in Section 1.

DECEMBER 1983—REVISED MARCH 1988

- **Package Options Include Plastic and Ceramic DIPs and Ceramic Flat Packages**
- **Dependable Texas Instruments Quality and Reliability**

SN5423 . . . J OR W PACKAGE
SN7423 . . . N PACKAGE
(TOP VIEW)

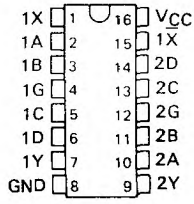

SN5425 . . . J OR W PACKAGE
SN7425 . . . N PACKAGE
(TOP VIEW)

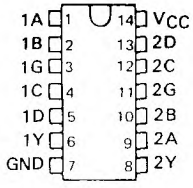

description

These devices contain dual 4-input positive NOR gates with strobe. They perform the Boolean function:

$$Y = \overline{G(A+B+C+D)}$$

(with 1X and $1\overline{X}$ of '23 left open).

The SN5423 and the SN5425 are characterized for operation over the full military temperature range of −55°C to 125°C. The SN7423 and the SN7425 are characterized for operation from 0°C to 70°C.

FUNCTION TABLE

INPUTS					OUTPUT
A	B	C	D	G	Y
H	X	X	X	H	L
X	H	X	X	H	L
X	X	H	X	H	L
X	X	X	H	H	L
L	L	L	L	X	H
X	X	X	X	L	H

Expander inputs are open.
H = high level, L = low level, X = irrelevant

logic diagram

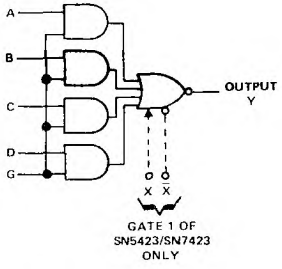

logic symbols†

SN5423/SN7423

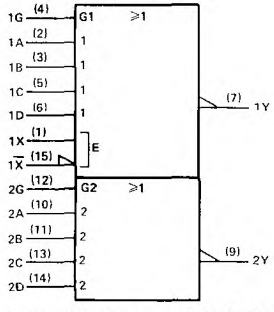

SN5425/SN7425

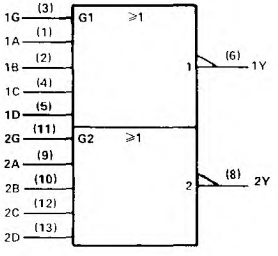

†These symbols are in accordance with ANSI/IEEE Std. 91-1984 and IEC Publication 617-12.
Pin numbers are for J, N, or W packages.

PRODUCTION DATA documents contain information current as of publication date. Products conform to specifications per the terms of Texas Instruments standard warranty. Production processing does not necessarily include testing of all parameters.

schematic (each gate)

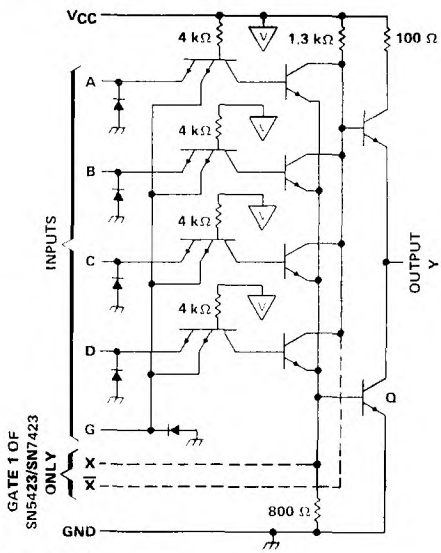

NOTES: A. Component values shown are nominal.
B. Both expander inputs are used simultaneously for expanding.
C. If expander is not used leave X and X open.
D. A total of four expander gates can be connected to the expander inputs.
▽ – V_{CC} bus

absolute maximum ratings over operating free-air temperature range (unless otherwise noted)

Supply voltage V_{CC} (see Note 1) . . . . . 7 V
Input voltage (see Note 1) . . . . . 5.5 V
Interemitter voltage (see Note 2) . . . . . 5.5 V
Operating free-air temperature range: SN5423, SN5425 Circuits . . . . . −55°C to 125°C
SN7423, SN7425 Circuits . . . . . 0°C to 70°C
Storage temperature range . . . . . −65°C to 150°C

NOTES: 1. Voltage values, except interemitter voltage, are with respect to network ground terminal.
2. This is the voltage between two emitters of a multiple-emitter transistor.

recommended operating conditions

			'23, '25			UNIT
			MIN	NOM	MAX	
V_{CC}	Supply voltage	54 Family	4.5	5	5.5	V
		74 Family	4.75	5	5.25	
V_{IH}	High-level input voltage		2			V
V_{IL}	Low-level input voltage				0.8	V
I_{OH}	High-level output current				−0.8	mA
I_{OL}	Low-level output current	54			16	mA
		74 Family			16	
T_A	Operating free-air temperature range	54 Family	−55		125	°C
		74 Family	0		70	

The '23 is designed for use with up to four '60 expanders.

TEXAS INSTRUMENTS
POST OFFICE BOX 655012 • DALLAS, TEXAS 75265

electrical characteristics over recommended operating free-air temperature range (unless otherwise noted)

PARAMETER		TEST CONDITIONS†			MIN	TYP‡	MAX	UNIT
V_I		V_{CC} = MIN, I_I = −12 mA					−1.5	V
V_{OH}		V_{CC} = MIN, V_{IL} = 0.8 V, I_{OH} = −0.8 mA			2.4	3.4		V
V_{OL}		V_{CC} = MIN, V_{IH} = 2 V, I_{OL} = 16 mA				0.2	0.4	V
I_I		V_{CC} = MAX, V_I = 5.5 V					1	mA
I_{IH}	data inputs	V_{CC} = MAX, V_I = 2.4 V					40	μA
	strobe inputs						160	
I_{IL}	data inputs	V_{CC} = MAX, V_I = 0.4 V					−1.6	mA
	strobe inputs						−6.4	
I_{OS}§		V_{CC} = MAX		54 Family	−20		−55	mA
				74 Family	−18		−55	
I_{CCH}		V_{CC} = MAX, All inputs at 0 V				8	16	mA
I_{CCL}		V_{CC} = MAX, All inputs at 5 V				10	19	mA

† For conditions shown as MIN or MAX, use the appropriate value specified under recommended operating conditions for the applicable device type. Expander inputs X and $\overline{X}$ are open.
‡ All typical values are at V_{CC} = 5 V, T_A = 25°C.
§ Not more than one output should be shorted at a time.

electrical characteristics (SN5423 circuits) using expander inputs, V_{CC} = 4.5 V, T_A = −55°C

PARAMETER		TEST CONDITIONS			MIN	TYP†	MAX	UNIT
$I_{\overline{X}}$	Expander current	V_X at $\overline{X}$ = 0.4 V,	I_{OL} = 16 mA				−3.5	mA
$V_{BE(Q)}$	Base-Emitter voltage of output transistor (Q)	I_{OL} = 16 mA,	$I_X + I_{\overline{X}}$ = 0.41 mA,	R_X at $\overline{X}$ = 0			1.1	V
V_{OH}	High-level output voltage	I_{OH} = −0.4 mA,	I_X = 0.15 mA,	$I_{\overline{X}}$ = −0.15 mA	2.4	3.4		V
V_{OL}	Low-level output voltage	I_{OL} = 16 mA,	$I_X + I_{\overline{X}}$ = 0.3 mA,	R_X at $\overline{X}$ = 114 Ω		0.2	0.4	V

electrical characteristics (SN7423 circuits) using expander inputs, V_{CC} = 4.75 V, T_A = 0°C

PARAMETER		TEST CONDITIONS			MIN	TYP†	MAX	UNIT
$I_{\overline{X}}$	Expander current	V_X at $\overline{X}$ = 0.4 V,	I_{OL} = 16 mA				−3.8	mA
$V_{BE(Q)}$	Base-Emitter voltage of output transistor (Q)	I_{OL} = 16 mA,	$I_X + I_{\overline{X}}$ = 0.62 mA,	R_X at $\overline{X}$ = 0			1	V
V_{OH}	High-level output voltage	I_{OH} = −0.4 mA,	I_X = 0.27 mA,	$I_{\overline{X}}$ = −0.27 mA	2.4	3.4		V
V_{OL}	Low-level output voltage	I_{OL} = 16 mA,	$I_X + I_{\overline{X}}$ = 0.43 mA,	R_X at $\overline{X}$ = 130 Ω		0.2	0.4	V

† All typical values are at V_{CC} = 5 V, T_A = 25°C.

switching characteristics, V_{CC} = 5 V, T_A = 25°C, N = 10, (see note 3)

PARAMETER	TEST CONDITIONS		MIN	TYP	MAX	UNIT
t_{PLH}	R_L = 400 Ω,	C_L = 15 pF		13	22	ns
t_{PHL}	R_L = 400 Ω,	C_L = 15 pF		8	15	ns

NOTE 3: Switching characteristics of the SN5423 and SN7424 are tested with the expander pins open.

- **For Driving Low-Threshold-Voltage MOS Inputs**

SN5426 . . . J PACKAGE
SN54LS26 . . . J OR W PACKAGE
SN7426 . . . N PACKAGE
SN74LS26 . . . D OR N PACKAGE
(TOP VIEW)

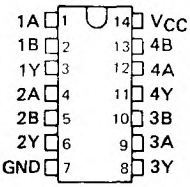

SN54LS26 . . . FK PACKAGE
(TOP VIEW)

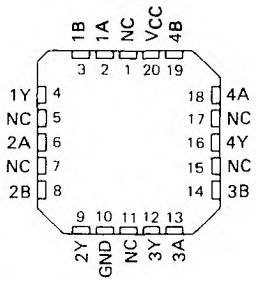

NC – No internal connection

description

These 2-input open-collector NAND gates feature high-output voltage ratings for interfacing with low-threshold-voltage MOS logic circuits or other 12-volt systems. Although the output is rated to withstand 15 volts, the V_{CC} terminal is connected to the standard 5-volt source.

The SN5426 and SN54LS26 are characterized for operation over the full military temperature range of −55°C to 125°C. The SN7426 and SN74LS26 are characterized for operation from 0°C to 70°C.

logic diagram

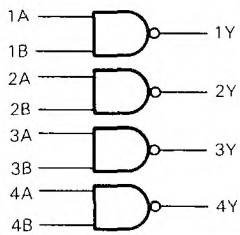

positive logic

$$Y = \overline{AB}$$

logic symbol†

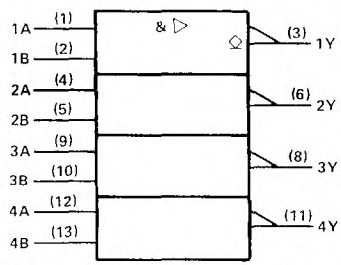

† This symbol is in accordance with ANSI/IEEE Std 91-1984 and IEC Publication 617-12.
Pin numbers shown are for D, J, N, and W packages.

PRODUCTION DATA documents contain information current as of publication date. Products conform to specifications per the terms of Texas Instruments standard warranty. Production processing does not necessarily include testing of all parameters.

schematics

'26

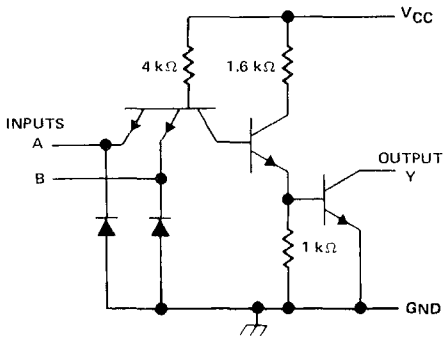

'LS26

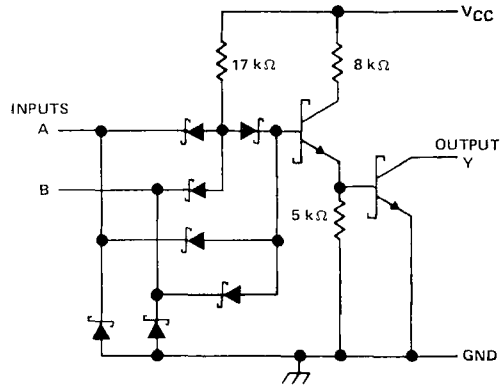

Resistor values shown are nominal

absolute maximum ratings over operating free-air temperature range (unless otherwise noted)

Supply voltage, V_{CC} (see Note 1) ..... 7 V
Input voltage: '26 ..... 5.5 V
'LS26 ..... 7 V
Operating free-air temperature: SN54' ..... −55°C to 125°C
SN74' ..... 0°C to 70°C
Storage temperature range ..... −65°C to 150°C

NOTE 1: Voltage values are with respect to network ground terminal.

TEXAS INSTRUMENTS
POST OFFICE BOX 655012 • DALLAS, TEXAS 75265

recommended operating conditions

	SN54LS26			SN74LS26			UNIT
	MIN	NOM	MAX	MIN	NOM	MAX	
V_{CC} Supply voltage	4.5	5	5.5	4.75	5	5.25	V
V_{IH} High-level input voltage	2			2			V
V_{IL} Low-level input voltage			0.7			0.8	V
V_{OH} High-level output voltage			15			15	V
I_{OL} Low-level output current			4			8	mA
T_A Operating free-air temperature	− 55		125	0		70	°C

electrical characteristics over recommended operating free-air temperature range (unless otherwise noted)

PARAMETER	TEST CONDITIONS†			SN54LS26			SN74LS26			UNIT
				MIN	TYP‡	MAX	MIN	TYP‡	MAX	
V_{IK}	V_{CC} = MIN,	I_I = − 18 mA				− 1.5			− 1.5	V
I_{OH}	V_{CC} = MIN,	V_{IL} = MAX,	V_{OH} = 12 V			50			50	μA
	V_{CC} = MIN,	V_{IL} = MAX,	V_{OH} = 15 V			1			1	mA
V_{OL}	V_{CC} = MIN,	V_{IH} = 2 V,	I_{OL} = 4 mA		0.25	0.4		0.25	0.4	V
	V_{CC} = MIN,	V_{IH} = 2 V,	I_{OL} = 8 mA					0.35	0.5	
I_I	V_{CC} = MAX,	V_I = 7 V				0.1			0.1	mA
I_{IH}	V_{CC} = MAX,	V_{IH} = 2.7 V				20			20	μA
I_{IL}	V_{CC} = MAX,	V_{IL} = 0.4 V				− 0.4			− 0.4	mA
I_{CCH}	V_{CC} = MAX,	V_I = 0			0.8	1.6		0.8	1.6	mA
I_{CCL}	V_{CC} = MAX,	V_I = 4.5 V			2.4	4.4		2.4	4.4	

† For conditions shown as MIN or MAX, use the appropriate value specified under recommended operating conditions.
‡ All typical values are at V_{CC} = 5 V, T_A = 25°C.

switching characteristics, V_{CC} = 5 V, T_A = 25°C (see note 2)

PARAMETER	FROM (INPUT)	TO (OUTPUT)	TEST CONDITIONS	MIN	TYP	MAX	UNIT
t_{PLH}	A or B	Y	R_L = 2 kΩ, C_L = 15 pF		17	32	ns
t_{PHL}					15	28	ns

NOTE 2: Load circuits and voltage waveforms are shown in Section 1.

recommended operating conditions

		SN5426			SN7426			UNIT
		MIN	NOM	MAX	MIN	NOM	MAX	
V_{CC}	Supply voltage	4.5	5	5.5	4.75	5	5.25	V
V_{IH}	High-level input voltage	2			2			V
V_{IL}	Low-level input voltage			0.8			0.8	V
V_{OH}	High-level output voltage			15			15	V
I_{OL}	Low-level output current			16			16	mA
T_A	Operating free-air temperature	−55		125	0		70	°C

electrical characteristics over recommended operating free-air temperature range (unless otherwise noted)

PARAMETER	TEST CONDITIONS†	SN5426			SN7426			UNIT
		MIN	TYP‡	MAX	MIN	TYP‡	MAX	
V_{IK}	V_{CC} = MIN, I_I = −12 mA			−1.5			−1.5	V
I_{OH}	V_{CC} = MIN, V_{IL} = 0.8 V, V_{OH} = 12 V						50	μA
	V_{CC} = MIN, V_{IL} = 0.7 V, V_{OH} = 12 V			50				
	V_{CC} = MIN, V_{IL} = 0.8 V, V_{OH} = 15 V						1	mA
	V_{CC} = MIN, V_{IL} = 0.7 V, V_{OH} = 15 V			1				
V_{OL}	V_{CC} = MIN, V_{IH} = 2 V, I_{OL} = 16 mA			0.4			0.4	V
I_I	V_{CC} = MAX, V_I = 5.5 V			1			1	mA
I_{IH}	V_{CC} = MAX, V_I = 2.4 V			40			40	μA
I_{IL}	V_{CC} = MAX, V_I = 0.4 V			−1.6			−1.6	mA
I_{CCH}	V_{CC} = MAX, V_I = 0		4	8		4	8	mA
I_{CCL}	V_{CC} = MAX, V_I = 4.5 V		12	22		12	22	mA

†For conditions shown as MIN or MAX, use the appropriate value specified under recommended operating conditions.
‡All typical values are at V_{CC} = 5 V, T_A = 25°C

switching characteristics, V_{CC} = 5 V, T_A = 25°C (see note 2)

PARAMETER	FROM (INPUT)	TO (OUTPUT)	TEST CONDITIONS	MIN	TYP	MAX	UNIT
t_{PLH}	A or B	Y	R_L = 1 kΩ, C_L = 15 pF		16	24	ns
t_{PHL}					11	17	ns

NOTE 2: Load circuits and voltage waveforms are shown in Section 1.

TEXAS INSTRUMENTS
POST OFFICE BOX 655012 • DALLAS, TEXAS 75265

DECEMBER 1983—REVISED MARCH 1988

- **Package Options Include Plastic "Small Outline" Packages, Ceramic Chip Carriers and Flat Packages, and Plastic and Ceramic DIPs**
- **Dependable Texas Instruments Quality and Reliability**

description

These devices contain three independent 3-input NOR gates.

The SN5427 and SN54LS27 are characterized for operation over the full military temperature range of −55°C to 125°C. The SN7427 and SN74LS27 are characterized for operation from 0°C to 70°C.

FUNCTION TABLE (each gate)

INPUTS			OUTPUT
A	B	C	Y
H	X	X	L
X	H	X	L
X	X	H	L
L	L	L	H

logic symbol†

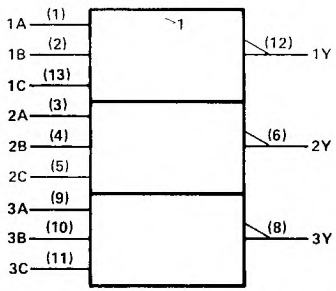

† This symbol is in accordance with ANSI/IEEE Std 91-1984 and IEC Publication 617-12.
Pin numbers shown are for D, J, N, and W packages.

SN5427, SN54LS27 . . . J OR W PACKAGE
SN7427 . . . N PACKAGE
SN74LS27 . . . D OR N PACKAGE
(TOP VIEW)

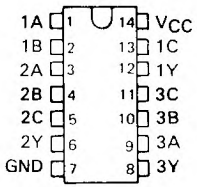

SN54LS27 . . . FK PACKAGE
(TOP VIEW)

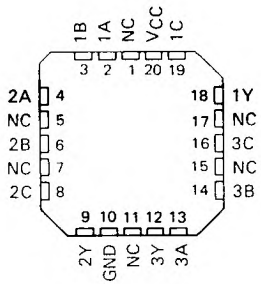

NC - No internal connection

logic diagram

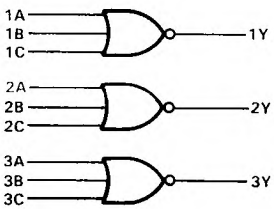

positive logic

$$Y = \overline{A + B + C} \text{ or } Y = \overline{A} \cdot \overline{B} \cdot \overline{C}$$

PRODUCTION DATA documents contain information current as of publication date. Products conform to specifications per the terms of Texas Instruments standard warranty. Production processing does not necessarily include testing of all parameters.

schematics (each gate)

'27

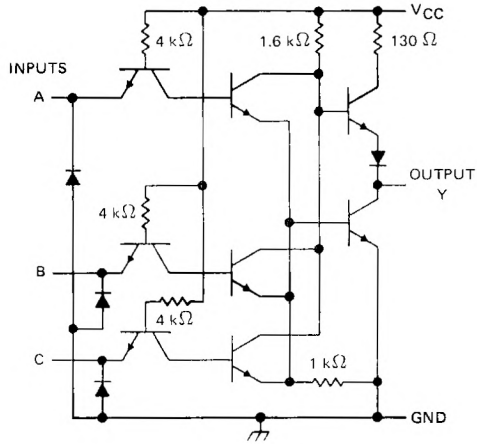

'LS27

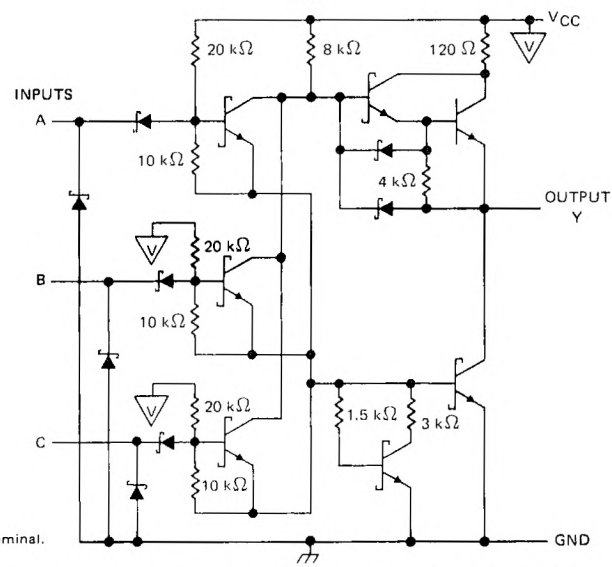

Resistor values shown are nominal.

absolute maximum ratings over operating free-air temperature range (unless otherwise noted)

Supply voltage, V_{CC} (see Note 1) . . . . . 7 V
Input voltage: '27 . . . . . 5.5 V
'LS27 . . . . . 7 V
Operating free-air temperature: SN54' . . . . . −55°C to 125°C
SN74' . . . . . 0°C to 70°C
Storage temperature range . . . . . −65°C to 150°C

NOTE 1: Voltage values are with respect to network ground terminal.

TEXAS INSTRUMENTS
POST OFFICE BOX 655012 • DALLAS, TEXAS 75265

recommended operating conditions

		SN5427			SN7427			UNIT
		MIN	NOM	MAX	MIN	NOM	MAX	
V_{CC}	Supply voltage	4.5	5	5.5	4.75	5	5.25	V
V_{IH}	High-level input voltage	2			2			V
V_{IL}	Low-level input voltage			0.8			0.8	V
I_{OH}	High-level output current			−0.8			−0.8	mA
I_{OL}	Low-level output current			16			16	mA
T_A	Operating free-air temperature	−55		125	0		70	°C

electrical characteristics over recommended operating free-air temperature range (unless otherwise noted)

PARAMETER	TEST CONDITIONS †	SN5427			SN7427			UNIT
		MIN	TYP ‡	MAX	MIN	TYP ‡	MAX	
V_{IK}	V_{CC} = MIN, I_I = −12 mA			−1.5			−1.5	V
V_{OH}	V_{CC} = MIN, V_{IL} = 0.8 V, I_{OH} = −0.8 mA	2.4	3.4		2.4	3.4		V
V_{OL}	V_{CC} = MIN, V_{IH} = 2 V, I_{OL} = 16 mA		0.2	0.4		0.2	0.4	V
I_I	V_{CC} = MAX, V_I = 5.5 V			1			1	mA
I_{IH}	V_{CC} = MAX, V_I = 2.4 V			40			40	μA
I_{IL}	V_{CC} = MAX, V_I = 0.4 V			−1.6			−1.6	mA
I_{OS} §	V_{CC} = MAX	−20		−55	−18		−55	mA
I_{CCH}	V_{CC} = MAX, V_I = 0 V		10	16		10	16	mA
I_{CCL}	V_{CC} = MAX, See Note 2		16	26		16	26	mA

† For conditions shown as MIN or MAX, use the appropriate value specified under recommended operating conditions.
‡ All typical values are at V_{CC} = 5 V, T_A = 25°C.
§ Not more than one output should be shorted at a time.
NOTE 2: One input at 4.5 V, all others at GND.

switching characteristics, V_{CC} = 5 V, T_A = 25°C (see note 3)

PARAMETER	FROM (INPUT)	TO (OUTPUT)	TEST CONDITIONS	MIN	TYP	MAX	UNIT
t_{PLH}	A, B or C	Y	R_L = 400 Ω, C_L = 15 pF		10	15	ns
t_{PHL}					7	11	ns

NOTE 3: Load circuits and voltage waveforms are shown in Section 1.

recommended operating conditions

		SN54LS27			SN74LS27			UNIT
		MIN	NOM	MAX	MIN	NOM	MAX	
V_{CC}	Supply voltage	4.5	5	5.5	4.75	5	5.25	V
V_{IH}	High-level input voltage	2			2			V
V_{IL}	Low-level input voltage			0.7			0.8	V
I_{OH}	High-level output current			−0.4			−0.4	mA
I_{OL}	Low-level output current			4			8	mA
T_A	Operating free-air temperature	−55		125	0		70	°C

electrical characteristics over recommended operating free-air temperature range (unless otherwise noted)

PARAMETER	TEST CONDITIONS †			SN54LS27			SN74LS27			UNIT
				MIN	TYP‡	MAX	MIN	TYP‡	MAX	
V_{IK}	V_{CC} = MIN,	I_I = −18 mA				−1.5			−1.5	V
V_{OH}	V_{CC} = MIN,	V_{IL} = MAX,	I_{OH} = −0.4 mA	2.5	3.4		2.7	3.4		V
V_{OL}	V_{CC} = MIN,	V_{IH} = 2 V,	I_{OL} = 4 mA		0.25	0.4		0.25	0.4	V
	V_{CC} = MIN,	V_{IH} = 2 V,	I_{OL} = 8 mA					0.35	0.5	
I_I	V_{CC} = MAX,	V_I = 7 V				0.1			0.1	mA
I_{IH}	V_{CC} = MAX,	V_I = 2.7 V				20			20	μA
I_{IL}	V_{CC} = MAX,	V_I = 0.4 V				−0.4			−0.4	mA
I_{OS}§	V_{CC} = MAX			−20		−100	−20		−100	mA
I_{CCH}	V_{CC} = MAX,	V_I = 0 V			2	4		2	4	mA
I_{CCL}	V_{CC} = MAX,	See Note 2			3.4	6.8		3.4	6.8	mA

† For conditions shown as MIN or MAX, use the appropriate value specified under recommended operating conditions
‡ All typical values are at V_{CC} = 5 V, T_A = 25°C.
§ Not more than one output should be shorted at a time, and the duration of the short circuit should not exceed one second.
NOTE 2: One input at 4.5 V, all others at GND.

switching characteristics, V_{CC} = 5 V, T_A = 25°C (see note 3)

PARAMETER	FROM (INPUT)	TO (OUTPUT)	TEST CONDITIONS	MIN	TYP	MAX	UNIT
t_{PLH}	A, B or C	Y	R_L = 2 kΩ, C_L = 15 pF		10	15	ns
t_{PHL}					10	15	ns

NOTE 3: Load circuits and voltage waveforms are shown in Section 1.

TEXAS INSTRUMENTS
POST OFFICE BOX 655012 • DALLAS, TEXAS 75265

DECEMBER 1983 – REVISED MARCH 1988

- **Package Options Include Plastic "Small Outline" Packages, Ceramic Chip Carriers and Flat Packages, and Plastic and Ceramic DIPs**
- **Dependable Texas Instruments Quality and Reliability**

description

These devices contain four independent 2-input NOR buffer gates.

The SN5428, and SN54LS28 are characterized for operation over the full military temperature range of −55°C to 125°C. The SN7428, and SN74LS28 are characterized for operation from 0°C to 70°C.

FUNCTION TABLE (each gate)

INPUTS		OUTPUT
A	B	Y
H	X	L
X	H	L
L	L	H

positive logic

$$Y = \overline{A + B} \text{ or } Y = \overline{A} \cdot \overline{B}$$

logic symbol†

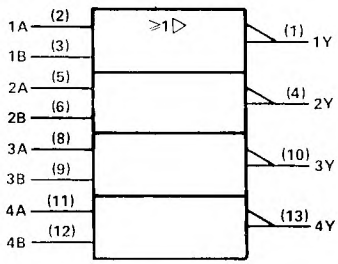

† This symbol is in accordance with ANSI/IEEE Std 91-1984 and IEC Publication 617-12.

Pin numbers shown are for D, J, N, and W packages.

SN5428, SN54LS28 . . . J OR W PACKAGE
SN7428 . . . N PACKAGE
SN74LS28 . . . D OR N PACKAGE
(TOP VIEW)

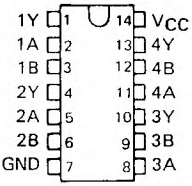

SN54LS28 . . . FK PACKAGE
(TOP VIEW)

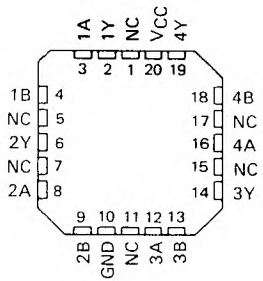

NC – No internal connection

logic diagram

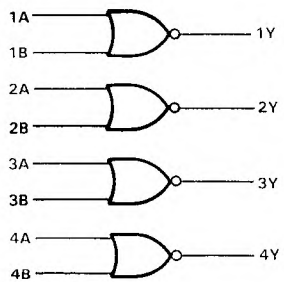

PRODUCTION DATA documents contain information current as of publication date. Products conform to specifications per the terms of Texas Instruments standard warranty. Production processing does not necessarily include testing of all parameters.

schematics (each gate)

'28

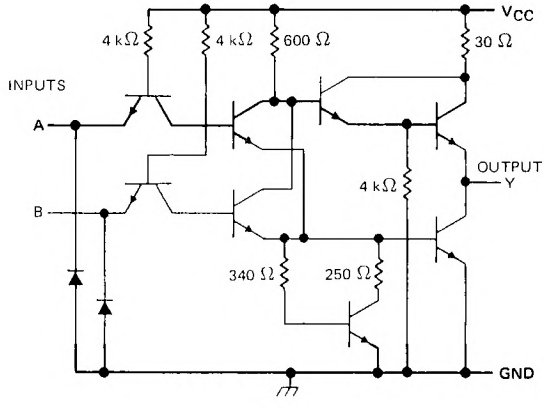

'LS28

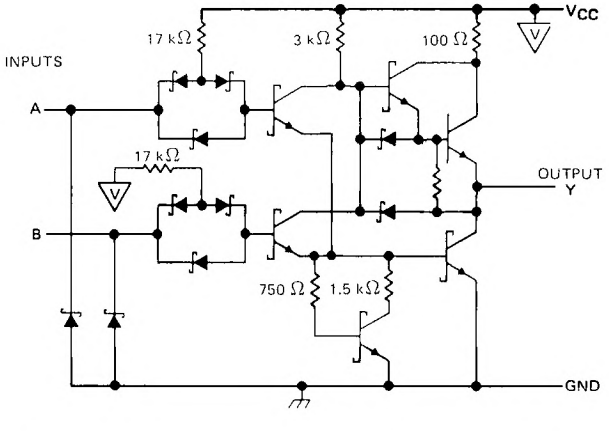

Resistor values shown are nominal.

absolute maximum ratings over operating free-air temperature range (unless otherwise noted)

Supply voltage, V_{CC} (see Note 1)		7 V
Input voltage:	'28	5.5 V
	'LS28	7 V
Operating free-air temperature:	SN54'	−55°C to 125°C
	SN74'	0°C to 70°C
Storage temperature range		−65°C to 150°C

NOTE 1: Voltage values are with respect to network ground terminal.

TEXAS INSTRUMENTS
POST OFFICE BOX 655012 • DALLAS, TEXAS 75265

recommended operating conditions

	SN5428			SN7428			UNIT
	MIN	NOM	MAX	MIN	NOM	MAX	
V_{CC} Supply voltage	4.5	5	5.5	4.75	5	5.25	V
V_{IH} High-level input voltage	2			2			V
V_{IL} Low-level input voltage			0.8			0.8	V
I_{OH} High-level output current			−2.4			−2.4	mA
I_{OL} Low-level output current			48			48	mA
T_A Operating free-air temperature	−55		125	0		70	°C

electrical characteristics over recommended operating free-air temperature range (unless otherwise noted)

PARAMETER	TEST CONDITIONS †	MIN	TYP‡	MAX	UNIT
V_{IK}	V_{CC} = MIN, I_I = −12mA			−1.5	V
V_{OH}	V_{CC} = MIN, V_{IL} = 0.8 V, I_{OH} = −2.4 mA	2.4	3.4		V
V_{OL}	V_{CC} = MIN, V_{IH} = 2 V, I_{OL} = 48 mA		0.2	0.4	V
I_I	V_{CC} = MAX, V_I = 5.5 V			1	mA
I_{IH}	V_{CC} = MAX, V_I = 2.4 V			40	μA
I_{IL}	V_{CC} = MAX, V_I = 0.4 V			−1.6	mA
I_{OS}§	V_{CC} = MAX	−70		−180	mA
I_{CCH}	V_{CC} = MAX, V_I = 0 V		12	21	mA
I_{CCL}	V_{CC} = MAX, See Note 2		33	57	mA

† For conditions shown as MIN or MAX, use the appropriate value specified under recommended operating conditions.
‡ All typical values are at V_{CC} = 5 V, T_A = 25°C.
§ Not more than one output should be shorted at a time and the duration of the short circuit should not exceed one second.
NOTE 2. One input at 4.5 V, all others at GND.

switching characteristics, V_{CC} = 5 V, T_A = 25°C (see note 3)

PARAMETER	FROM (INPUT)	TO (OUTPUT)	TEST CONDITIONS	MIN	TYP	MAX	UNIT
t_{PLH}	A or B	Y	R_L = 133 Ω, C_L = 50 pF		6	9	ns
t_{PHL}					8	12	ns
t_{PLH}			R_L = 133 Ω, C_L = 150 pF		10	15	ns
t_{PHL}					12	18	ns

NOTE 3: Load circuits and voltage waveforms are shown in Section 1.

recommended operating conditions

	SN54LS28			SN74LS28			UNIT
	MIN	NOM	MAX	MIN	NOM	MAX	
V_{CC} Supply voltage	4.5	5	5.5	4.75	5	5.25	V
V_{IH} High-level input voltage	2			2			V
V_{IL} Low-level input voltage			0.7			0.8	V
I_{OH} High-level output current			−1.2			−1.2	mA
I_{OL} Low-level output current			12			24	mA
T_A Operating free-air temperature	−55		125	0		70	°C

electrical characteristics over recommended operating free-air temperature range (unless otherwise noted)

PARAMETER	TEST CONDITIONS †			SN54LS28			SN74LS28			UNIT
				MIN	TYP‡	MAX	MIN	TYP‡	MAX	
V_{IK}	V_{CC} = MIN,	I_I = −18 mA				−1.5			−1.5	V
V_{OH}	V_{CC} = MIN,	V_{IL} = MAX,	I_{OH} = −1.2 mA	2.5	3.4		2.7	3.4		V
V_{OL}	V_{CC} = MIN,	V_{IH} = 2 V,	I_{OL} = 12 mA		0.25	0.4		0.24	0.4	V
	V_{CC} = MIN,	V_{IH} = 2 V,	I_{OL} = 24 mA					0.35	0.5	
I_I	V_{CC} = MAX,	V_I = 7 V				0.1			0.1	mA
I_{IH}	V_{CC} = MAX,	V_I = 2.7 V				20			20	μA
I_{IL}	V_{CC} = MAX,	V_I = 0.4 V				−0.4			−0.4	mA
I_{OS} §	V_{CC} = MAX			−30		−130	−30		−130	mA
I_{CCH}	V_{CC} = MAX,	V_I = 0 V			1.8	3.6		1.8	3.6	mA
I_{CCL}	V_{CC} = MAX,	See Note 2			6.9	13.8		6.9	13.8	mA

† For conditions shown as MIN or MAX, use the appropriate value specified under recommended operating conditions.
‡ All typical values are at V_{CC} = 5 V, T_A = 25°C.
§ Not more than one output should be shorted at a time and the duration of the short circuit should not exceed one second.
NOTE 2. One input at 4.5 V, all others at GND.

switching characteristics, V_{CC} = 5 V, T_A = 25°C (see note 3)

PARAMETER	FROM (INPUT)	TO (OUTPUT)	TEST CONDITIONS	MIN	TYP	MAX	UNIT
t_{PLH}	A or B	Y	R_L = 667 Ω, C_L = 45 pF		12	24	ns
t_{PHL}					12	24	ns

NOTE 3: Load circuits and voltage waveforms are shown in Section 1.

TEXAS INSTRUMENTS
POST OFFICE BOX 655012 • DALLAS, TEXAS 75265

- **Package Options Include Plastic "Small Outline" Packages, Ceramic Chip Carriers and Flat Packages, and Plastic and Ceramic DIPs**
- **Dependable Texas Instruments Quality and Reliability**

description

These devices contain a single 8-input NAND gate.

The SN5430, SN54LS30, and SN54S30 are characterized for operation over the full military range of −55°C to 125°C. The SN7430, SN74LS30, and SN74S30 are characterized for operation from 0°C to 70°C.

FUNCTION TABLE

INPUTS A THRU H	OUTPUT Y
All inputs H	L
One or more inputs L	H

logic diagram

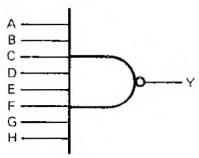

positive logic

$$Y = \overline{A \cdot B \cdot C \cdot D \cdot E \cdot F \cdot G \cdot H} \quad \text{or}$$

$$Y = \overline{A} + \overline{B} + \overline{C} + \overline{D} + \overline{E} + \overline{F} + \overline{G} + \overline{H}$$

logic symbol†

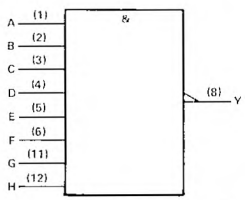

†This symbol is in accordance with ANSI/IEEE Std 91-1984 and IEC Publication 617-12.
Pin numbers shown are for D, J, N, and W packages.

SN5430 . . . J PACKAGE
SN54LS30, SN54S30 . . . J OR W PACKAGE
SN7430 . . . N PACKAGE
SN74LS30, SN74S30 . . . D OR N PACKAGE
(TOP VIEW)

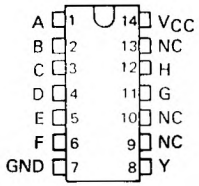

SN5430 . . . W PACKAGE
(TOP VIEW)

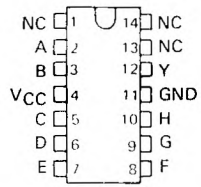

SN54LS30, SN54S30 . . . FK PACKAGE
(TOP VIEW)

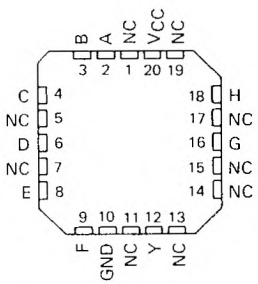

NC – No internal connection

PRODUCTION DATA documents contain information current as of publication date. Products conform to specifications per the terms of Texas Instruments standard warranty. Production processing does not necessarily include testing of all parameters.

schematics (each gate)

'30

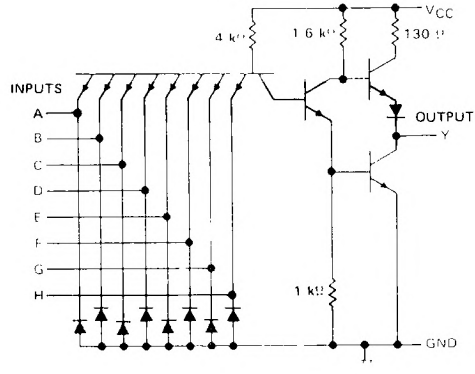

'LS30

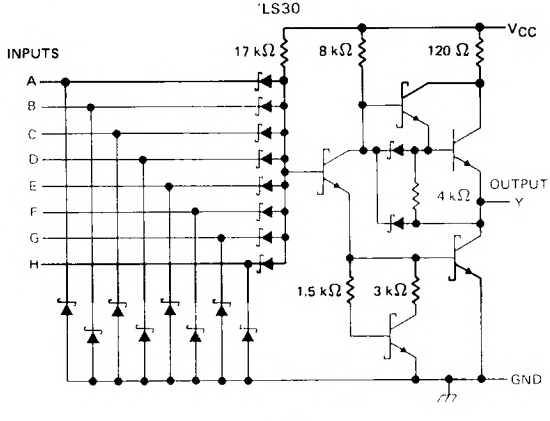

'S30

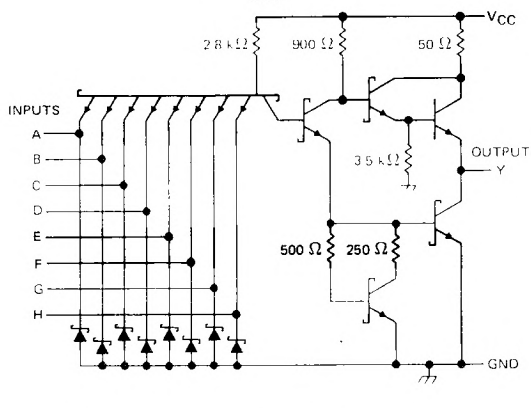

Resistor values shown are nominal.

TEXAS INSTRUMENTS
POST OFFICE BOX 655012 • DALLAS, TEXAS 75265

absolute maximum ratings over operating free-air temperature range (unless otherwise noted)

Supply voltage, V_{CC} (see Note 1) . . . . . 7 V
Input voltage . . . . . 5.5 V
Operating free-air temperature range: SN5430 . . . . . −55°C to 125°C
SN7430 . . . . . 0°C to 70°C
Storage temperature range . . . . . −65°C to 150°C

NOTE 1: Voltage values are with respect to network ground terminal.

recommended operating conditions

	SN5430			SN7430			UNIT
	MIN	NOM	MAX	MIN	NOM	MAX	
V_{CC} Supply voltage	4.5	5	5.5	4.75	5	5.25	V
V_{IH} High-level input voltage	2			2			V
V_{IL} Low-level input voltage			0.8			0.8	V
I_{OH} High-level output current			−0.4			−0.4	mA
I_{OL} Low-level output current			16			16	mA
T_A Operating free-air temperature	−55		125	0		70	°C

electrical characteristics over recommended operating free-air temperature range (unless otherwise noted)

PARAMETER	TEST CONDITIONS†	SN5430			SN7430			UNIT
		MIN	TYP‡	MAX	MIN	TYP‡	MAX	
V_{IK}	V_{CC} = MIN, I_I = −12 mA			−1.5			−1.5	V
V_{OH}	V_{CC} = MIN, V_{IL} = 0.8 V, I_{OH} = −0.4 mA	2.4	3.4		2.4	3.4		V
V_{OL}	V_{CC} = MIN, V_{IH} = 2 V, I_{OL} = 16 mA		0.2	0.4		0.2	0.4	V
I_I	V_{CC} = MAX, V_I = 5.5 V			1			1	mA
I_{IH}	V_{CC} = MAX, V_I = 2.4 V			40			40	μA
I_{IL}	V_{CC} = MAX, V_I = 0.4 V			−1.6			−1.6	mA
I_{OS}§	V_{CC} = MAX	−20		−55	−18		−55	mA
I_{CCH}	V_{CC} = MAX, V_I = 0		1	2		1	2	mA
I_{CCL}	V_{CC} = MAX, V_I = 4.5 V		3	6		3	6	mA

† For conditions shown as MIN or MAX, use the appropriate value specified under recommended operating conditions
‡ All typical values are at V_{CC} = 5 V, T_A = 25°C.
§ Not more than one output should be shorted at a time.

switching characteristics, V_{CC} = 5 V, T_A = 25°C (see note 2)

PARAMETER	FROM (INPUT)	TO (OUTPUT)	TEST CONDITIONS	MIN	TYP	MAX	UNIT
t_{PLH}	Any	Y	R_L = 400 Ω, C_L = 15 pF		13	22	ns
t_{PHL}					8	15	ns

NOTE 2: Load circuits and voltage waveforms are shown in Section 1.

absolute maximum ratings over operating free-air temperature range (unless otherwise noted)

Supply voltage, V_{CC} (see Note 1) . . . . . 7 V
Input voltage . . . . . 7 V
Operating free-air temperature range: SN54LS30 . . . . . −55°C to 125°C
SN74LS30 . . . . . 0°C to 70°C
Storage temperature range . . . . . −65°C to 150°C

NOTE 1: Voltage values are with respect to network ground terminal.

recommended operating conditions

		SN54LS30			SN74LS30			UNIT
		MIN	NOM	MAX	MIN	NOM	MAX	
V_{CC}	Supply voltage	4.5	5	5.5	4.75	5	5.25	V
V_{IH}	High-level input voltage	2			2			V
V_{IL}	Low-level input voltage			0.7			0.8	V
I_{OH}	High-level output current			−0.4			−0.4	mA
I_{OL}	Low-level output current			4			8	mA
T_A	Operating free-air temperature	−55		125	0		70	°C

electrical characteristics over recommended operating free-air temperature range (unless otherwise noted)

PARAMETER	TEST CONDITIONS †			SN54LS30			SN74LS30			UNIT
				MIN	TYP‡	MAX	MIN	TYP‡	MAX	
V_{IK}	V_{CC} = MIN,	I_I = −18 mA				−1.5			−1.5	V
V_{OH}	V_{CC} = MIN,	V_{IL} = MAX,	I_{OH} = −0.4 mA	2.5	3.4		2.7	3.4		V
V_{OL}	V_{CC} = MIN,	V_{IH} = 2 V,	I_{OL} = 4 mA		0.25	0.4			0.4	V
	V_{CC} = MIN,	V_{IH} = 2 V,	I_{OL} = 8 mA					0.25	0.5	
I_I	V_{CC} = MAX,	V_I = 7 V				0.1			0.1	mA
I_{IH}	V_{CC} = MAX,	V_I = 2.7 V				20			20	μA
I_{IL}	V_{CC} = MAX,	V_I = 0.4 V				−0.4			−0.4	mA
I_{OS}§	V_{CC} = MAX			−20		−100	−20		−100	mA
I_{CCH}	V_{CC} = MAX,	V_I = 0			0.35	0.5		0.35	0.5	mA
I_{CCL}	V_{CC} = MAX,	V_I = 4.5 V			0.6	1.1		0.6	1.1	mA

† For conditions shown as MIN or MAX, use the appropriate value specified under recommended operating conditions.
‡ All typical values are at V_{CC} = 5 V, T_A = 25°C
§ Not more than one output should be shorted at a time, and the duration of the short-circuit should not exceed one second.

switching characteristics, V_{CC} = 5 V, T_A = 25°C (see note 2)

PARAMETER	FROM (INPUT)	TO (OUTPUT)	TEST CONDITIONS		MIN	TYP	MAX	UNIT
t_{PLH}	Any	Y	R_L = 2 kΩ,	C_L = 15 pF		8	15	ns
t_{PHL}						13	20	ns

NOTE 2: Load circuits and voltage waveforms are shown in Section 1

TEXAS INSTRUMENTS
POST OFFICE BOX 655012 • DALLAS, TEXAS 75265

absolute maximum ratings over operating free-air temperature range (unless otherwise noted)

Supply voltage, V_{CC} (see Note 1) . . . . . 7 V
Input voltage . . . . . 5.5 V
Operating free-air temperature range: SN54S30 . . . . . −55°C to 125°C
SN74S30 . . . . . 0°C to 70°C
Storage temperature range . . . . . −65°C to 150°C

NOTE 1: Voltage values are with respect to network ground terminal.

recommended operating conditions

	SN54S30			SN74S30			UNIT
	MIN	NOM	MAX	MIN	NOM	MAX	
V_{CC} Supply voltage	4.5	5	5.5	4.75	5	5.25	V
V_{IH} High-level input voltage	2			2			V
V_{IL} Low-level input voltage			0.8			0.8	V
I_{OH} High-level output current			−1			−1	mA
I_{OL} Low-level output current			20			20	mA
T_A Operating free-air temperature	−55		125	0		70	°C

electrical characteristics over recommended operating free-air temperature range (unless otherwise noted)

PARAMETER	TEST CONDITIONS †	SN54S30			SN74S30			UNIT
		MIN	TYP‡	MAX	MIN	TYP‡	MAX	
V_{IK}	V_{CC} = MIN, I_I = −18 mA			−1.2			−1.2	V
V_{OH}	V_{CC} = MIN, V_{IL} = 0.8 V, I_{OH} = −1 mA	2.5	3.4		2.7	3.4		V
V_{OL}	V_{CC} = MIN, V_{IH} = 2 V, I_{OL} = 20 mA			0.5			0.5	V
I_I	V_{CC} = MAX, V_I = 5.5 V			1			1	mA
I_{IH}	V_{CC} = MAX, V_I = 2.7 V			50			50	μA
I_{IL}	V_{CC} = MAX, V_I = 0.5 V			−2			−2	mA
I_{OS}§	V_{CC} = MAX	−40		−100	−40		−100	mA
I_{CCH}	V_{CC} = MAX, V_I = 0		3	5		3	5	mA
I_{CCL}	V_{CC} = MAX, V_I = 4.5 V		5.5	10		5.5	10	mA

† For conditions shown as MIN or MAX, use the appropriate value specified under recommended operating conditions.
‡ All typical values are at V_{CC} = 5 V, T_A = 25°C.
§ Not more than one output should be shorted at a time, and the duration of the short-circuit should not exceed one second.

switching characteristics, V_{CC} = 5 V, T_A = 25°C (see note 2)

PARAMETER	FROM (INPUT)	TO (OUTPUT)	TEST CONDITIONS	MIN	TYP	MAX	UNIT
t_{PLH}	Any	Y	R_L = 280 Ω, C_L = 15 pF		4	6	ns
t_{PHL}					4.5	7	ns
t_{PLH}			R_L = 280 Ω, C_L = 50 pF		5.5		ns
t_{PHL}					6.5		ns

NOTE 2: Load circuits and voltage waveforms are shown in Section 1.

DECEMBER 1983—REVISED MARCH 1988

- **Delay Elements for Generating Delay Lines**
- **Inverting and Non-inverting Elements**
- **Buffer NAND Elements Rated at I_{OL} of 12/24 mA**
- **PNP Inputs Reduce Fan-In (I_{IL} = −0.2 mA MAX)**
- **Worst Case MIN/MAX Delays Guaranteed Across Temperature and V_{CC} Ranges**

SN54LS31 . . . J OR W PACKAGE
SN74LS31 . . . D OR N PACKAGE
(TOP VIEW)

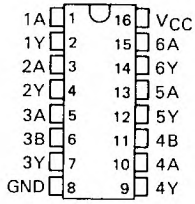

SN54LS31 . . . FK PACKAGE
(TOP VIEW)

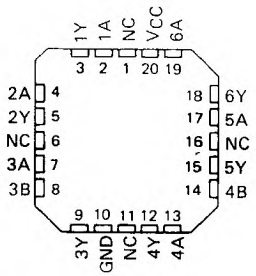

NC - No internal connection

description

These 'LS31 delay elements are intended to provide well-defined delays across both temperature and V_{CC} ranges. Used in cascade, a limitless range of delay gating is possible.

All inputs are PNP with I_{IL} MAX of −0.2 mA. Gates 1, 2, 5, and 6 have standard Low-Power Schottky output sink current capability of 4 and 8 mA I_{OL}. Buffers 3 and 4 are rated at 12 and 24 mA.

The SN54LS31 is characterized for operation over the full military temperature range of −55°C to 125°C. The SN74LS31 is characterized for operation from 0°C to 70°C.

logic symbol†

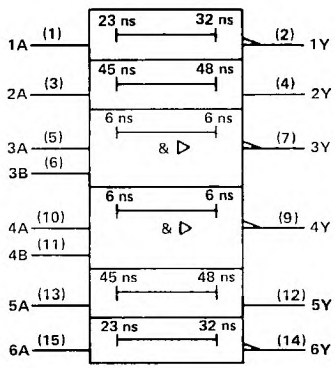

† This symbol is in accordance with ANSI/IEEE Std 91-1984 and IEC Publication 617-12.
Pin numbers shown are for D, J, N, and W packages

PRODUCTION DATA documents contain information current as of publication date. Products conform to specifications per the terms of Texas Instruments standard warranty. Production processing does not necessarily include testing of all parameters.

Delay Element	Logic	Typical Delays			Rated I_{OL}
		t_{PLH}	t_{PHL}	AVG.	
Gates 1 and 6	Inverting	32 ns	23 ns	27.5 ns	4 and 8 mA
Gates 2 and 5	Non-Inverting	45 ns	48 ns	46.5 ns	4 and 8 mA
Buffers 3 and 4	2-Input NAND	6 ns	6 ns	6 ns	12 and 24 mA

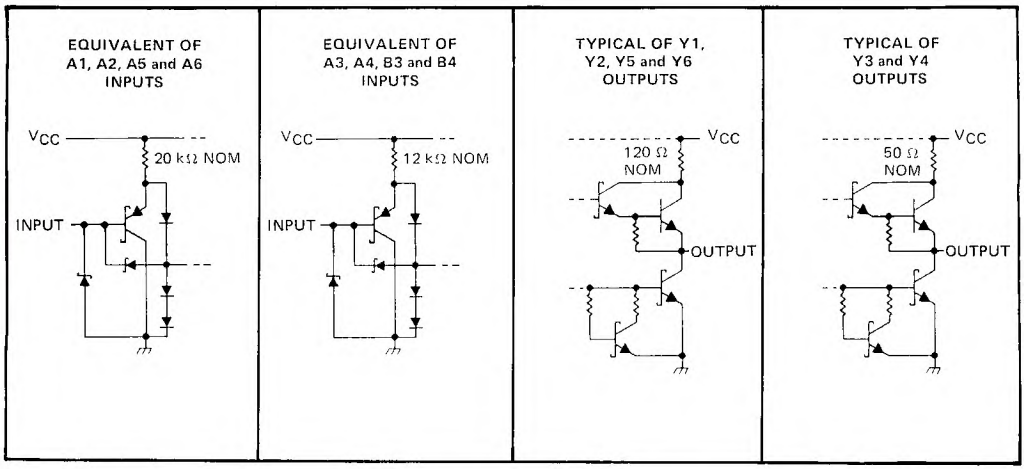

absolute maximum ratings over operating free air temperature range (unless otherwise noted)

Supply voltage, V_{CC} (See Note 1) . . . . . 7 V
Input voltage, V_I: All inputs . . . . . 7 V
Operating free-air temperature range: SN54LS31 . . . . . −55°C to 125°C
SN74LS31 . . . . . 0°C to 70°C
Storage temperature range . . . . . −65°C to 150°C

NOTE 1: Voltage values are with respect to network ground terminal.

recommended operating conditions

			SN54LS31			SN74LS31			UNIT
			MIN	NOM	MAX	MIN	NOM	MAX	
V_{CC}	Supply voltage		4.5	5	55	4.75	5	5.25	V
V_{IH}	High-level input voltage		2			2			V
V_{IL}	Low-level input voltage				0.7			0.8	V
I_{OH}	High-level output current	Y3, Y4 outputs			−1.2			−1.2	mA
		All other outpus			−0.4			−0.4	
I_{OL}	Low-level output current	Y3, Y4 outputs			12			24	mA
		All other outputs			4			8	
T_A	Operating free-air temperature		−55		125	0		70	°C

TEXAS INSTRUMENTS
POST OFFICE BOX 655012 • DALLAS, TEXAS 75265

electrical characteristics over recommended operating free-air temperature range (unless otherwise noted)

PARAMETER		TEST CONDITIONS†			SN54LS31			SN74LS31			UNIT
					MIN	TYP‡	MAX	MIN	TYP‡	MAX	
V_{IK}		V_{CC} = MIN, I_I = – 18 mA					– 1.5			– 1.5	V
V_{OH}		V_{CC} = MIN, V_{IH} = 2 V, V_{IL} = MAX	Y3, Y4	I_{OH} = – 1.2 mA	2.4	3.1		2.4	3.1		V
			Others	I_{OH} = – 0.4 mA	2.5	3.1		2.7	3.1		
V_{OL}		V_{CC} = MIN, V_{IH} = 2 V, V_{IL} = MAX	Y3, Y4	I_{OL} = 12 mA		0.25	0.4		0.25	0.4	V
				I_{OL} = 24 mA					0.35	0.5	
			Others	I_{OL} = 4 mA		0.25	0.4		0.25	0.4	
				I_{OL} = 8 mA					0.35	0.5	
I_I		V_{CC} = MAX, V_I = 7 V					0.1			0.1	mA
I_{IH}		V_{CC} = MAX, V_I = 2.7 V					20			20	μA
I_{IL}		V_{CC} = MAX, V_I = 0.4 V					– 0.2			– 0.2	mA
I_{OS}§		V_{CC} = MAX, A3, A4, B3, B4 = 0 V		Y3, Y4	– 30		– 130	– 30		– 130	mA
		V_{CC} = MAX, A1, A6 = 0 V, A2, A5 = 4.5 V		Y1, Y2, Y5, Y6	– 20		– 100	– 20		– 100	
I_{CC}	I_{CCH}	V_{CC} = MAX, A2, A5 = 4.5 V,	all other inputs 0 V			2.3	4		2.3	4	mA
	I_{CCL}	V_{CC} = MAX, A2, A5 = 0 V,	all other inputs 4.5 V			13	20		13	20	

† For conditions shown as MIN or MAX, use the appropriate value specified under recommended operating conditions.
‡ All typical values are at V_{CC} = 5 V, T_A = 25°C.
§ Not more than one output should be shorted at a time, and the duration of the short-circuit should not exceed one second.

switching characteristics, (see note 2)

PARAMETER	FROM (INPUT)	TO (OUTPUT)	SN54LS31			SN74LS31			UNIT
			MIN	TYP	MAX	MIN	TYP	MAX	
t_{PLH}	A1, A6	Y1, Y6	15		70	22		65	ns
t_{PHL}			9		50	13		45	ns
t_{PLH}	A2, A5	Y2, Y5	22		90	31		80	ns
t_{PHL}			20		105	30		95	ns
t_{PLH}	A3, B3, A4, Y4	Y3, Y4	2		20	2		15	ns
t_{PHL}			2		20	2		15	ns

NOTE 2 V_{CC} = MIN to MAX
R_L = 667 Ω, C_L = 45 pF for Y3 and Y4
R_L = 2 kΩ, C_L = 15 pF for Y1, Y2, Y5 and Y6
T_A = MIN to MAX
Load circuits and voltage waveforms are shown in Section 1.

- **Package Options Include Plastic "Small Outline" Packages, Ceramic Chip Carriers and Flat Packages, and Plastic and Ceramic DIPs**
- **Dependable Texas Instruments Quality and Reliability**

description

These devices contain four independent 2-input OR gates.

The SN5432, SN54LS32 and SN54S32 are characterized for operation over the full military range of −55°C to 125°C. The SN7432, SN74LS32 and SN74S32 are characterized for operation from 0°C to 70°C.

FUNCTION TABLE (each gate)

INPUTS		OUTPUT
A	B	Y
H	X	H
X	H	H
L	L	L

logic symbol†

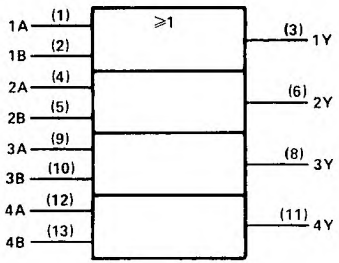

† This symbol is in accordance with ANSI/IEEE Std 91-1984 and IEC Publication 617-12

Pin numbers shown are for D, J, N, or W packages.

SN5432, SN54LS32, SN54S32 . . . J OR W PACKAGE
SN7432 . . . N PACKAGE
SN74LS32, SN74S32 . . . D OR N PACKAGE
(TOP VIEW)

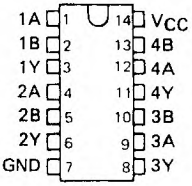

SN54LS32, SN54S32 . . . FK PACKAGE
(TOP VIEW)

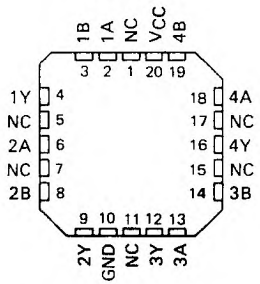

NC – No internal connection

logic diagram

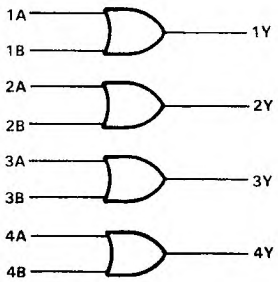

positive logic

$Y = A + B$ or $Y = \overline{\overline{A} \cdot \overline{B}}$

2 TTL Devices

PRODUCTION DATA documents contain information current as of publication date. Products conform to specifications per the terms of Texas Instruments standard warranty. Production processing does not necessarily include testing of all parameters.

schematics (each gate)

'32

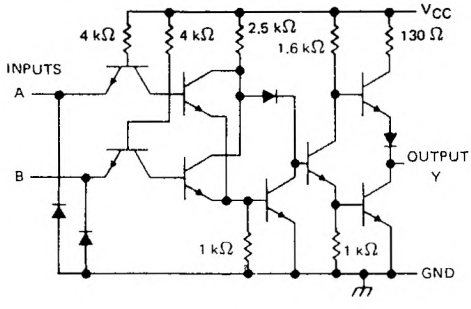

'LS32

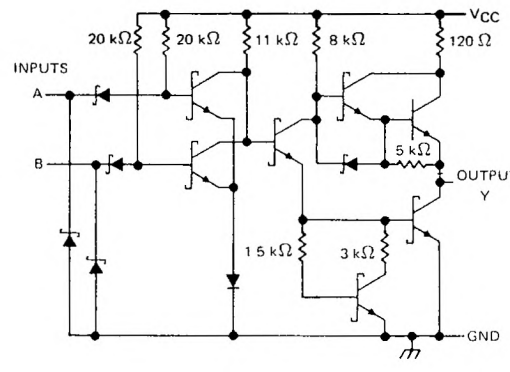

'S32

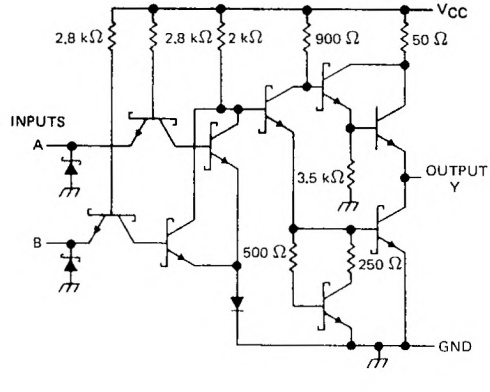

Resistor values shown are nominal.

absolute maximum ratings over operating free-air temperature range (unless otherwise noted)

Supply voltage, V_{CC} (see Note 1)	7 V
Input voltage: '32, 'S32	5.5 V
'LS32	7 V
Operating free-air temperature: SN54'	−55°C to 125°C
SN74'	0°C to 70°C
Storage temperature range	−65°C to 150°C

NOTE 1: Voltage values are with respect to network ground terminal

TEXAS INSTRUMENTS
POST OFFICE BOX 655012 • DALLAS, TEXAS 75265

recommended operating conditions

		SN5432			SN7432			UNIT
		MIN	NOM	MAX	MIN	NOM	MAX	
V_{CC}	Supply voltage	4.5	5	5.5	4.75	5	5.25	V
V_{IH}	Hgh-level input voltage	2			2			V
V_{IL}	Low-level imput voltage			0.8			0.8	V
I_{OH}	High-level output current			−0.8			−0.8	mA
I_{OL}	Low-level output current			16			16	mA
T_A	Operating free-air temperature	−55		125	0		70	°C

electrical characteristics over recommended operating free-air temperature range (unless otherwise noted)

PARAMETER	TEST CONDITIONS†			SN5432			SN7432			UNIT
				MIN	TYP‡	MAX	MIN	TYP‡	MAX	
V_{IK}	V_{CC} = MIN,	I_I = −12 mA				−1.5			−1.5	V
V_{OH}	V_{CC} = MIN,	V_{IH} = 2 V,	I_{OH} = −0.8 mA	2.4	3.4		2.4	3.4		V
V_{OL}	V_{CC} = MIN,	V_{IL} = 0.8 V,	I_{OL} = 16 mA		0.2	0.4		0.2	0.4	V
I_I	V_{CC} = MAX,	V_I = 5.5 V				1			1	mA
I_{IH}	V_{CC} = MAX,	V_I = 2.4 V				40			40	μA
I_{IL}	V_{CC} = MAX,	V_I = 0.4 V				−1.6			−1.6	mA
I_{OS}§	V_{CC} = MAX			−20		−55	−18		−55	mA
I_{CCH}	V_{CC} = MAX,	See Note 2			15	22		15	22	mA
I_{CCL}	V_{CC} = MAX,	V_I = 0 V			23	38		23	38	mA

† For conditions shown as MIN or MAX, use the appropriate value specified under recommended operating conditions.
‡ All typical values are at V_{CC} = 5 V, T_A = 25°C.
§ Not more than one output should be shorted at a time.
NOTE 2: One input at 4.5 V, all others at GND.

switching characteristics, V_{CC} = 5 V, T_A = 25°C (see note 3)

PARAMETER	FROM (INPUT)	TO (OUTPUT)	TEST CONDITIONS	MIN	TYP	MAX	UNIT
t_{PLH}	A or B	Y	R_L = 400 Ω, C_L = 15 pF		10	15	ns
t_{PHL}					14	22	ns

NOTE 3: Load circuits and voltage waveforms are shown in Section 1

recommended operating conditions

		SN54LS32			SN74LS32			UNIT
		MIN	NOM	MAX	MIN	NOM	MAX	
V_{CC}	Supply voltage	4.5	5	5.5	4.75	5	5.25	V
V_{IH}	High-level input voltage	2			2			V
V_{IL}	Low-level input voltage			0.7			0.8	V
I_{OH}	High-level output current			−0.4			−0.4	mA
I_{OL}	Low-level output current			4			8	mA
T_A	Operating free-air temperature	−55		125	0		70	°C

electrical characteristics over recommended operating free-air temperature range (unless otherwise noted)

PARAMETER	TEST CONDITIONS†			SN54LS32			SN74LS32			UNIT
				MIN	TYP‡	MAX	MIN	TYP‡	MAX	
V_{IK}	V_{CC} = MIN,	I_I = −18 mA				−1.5			−1.5	V
V_{OH}	V_{CC} = MIN,	V_{IH} = 2 V,	I_{OH} = −0.4 mA	2.5	3.4		2.7	3.4		V
V_{OL}	V_{CC} = MIN,	V_{IL} = MAX,	I_{OL} = 4 mA		0.25	0.4		0.25	0.4	V
	V_{CC} = MIN,	V_{IL} = MAX,	I_{OL} = 8 mA					0.35	0.5	
I_I	V_{CC} = MAX,	V_I = 7 V				0.1			0.1	mA
I_{IH}	V_{CC} = MAX,	V_I = 2.7 V				20			20	μA
I_{IL}	V_{CC} = MAX,	V_I = 0.4 V				−0.4			−0.4	mA
I_{OS}§	V_{CC} = MAX			−20		−100	−20		−100	mA
I_{CCH}	V_{CC} = MAX,	See Note 2			3.1	6.2		3.1	6.2	mA
I_{CCL}	V_{CC} = MAX,	V_I = 0 V			4.9	9.8		4.9	9.8	mA

† For conditions shown as MIN or MAX, use the appropriate value specified under recommended operating conditions.
‡ All typical values are at V_{CC} = 5 V, T_A = 25°C
§ Not more than one output should be shorted at a time and the duration of the short-circuit should not exceed one second.
NOTE 2: One input at 4.5 V, all others at GND.

switching characteristics, V_{CC} = 5 V, T_A = 25°C (see note 3)

PARAMETER	FROM (INPUT)	TO (OUTPUT)	TEST CONDITIONS		MIN	TYP	MAX	UNIT
t_{PLH}	A or B	Y	R_L = 2 kΩ,	C_L = 15 pF		14	22	ns
t_{PHL}						14	22	ns

NOTE 3: Load circuits and voltage waveforms are shown in Section 1.

TEXAS INSTRUMENTS
POST OFFICE BOX 655012 • DALLAS, TEXAS 75265

recommended operating conditions

		SN54S32			SN74S32			UNIT
		MIN	NOM	MAX	MIN	NOM	MAX	
V_{CC}	Supply voltage	4.5	5	5.5	4.75	5	5.25	V
V_{IH}	High-level input voltage	2			2			V
V_{IL}	Low-level input voltage			0.8			0.8	V
I_{OH}	High-level output current			−1			−1	mA
I_{OL}	Low-level output current			20			20	mA
T_A	Operating free-air temperature	−55		125	0		70	°C

electrical characteristics over recommended operating free-air temperature range (unless otherwise noted)

PARAMETER	TEST CONDITIONS †							UNIT
			MIN	TYP‡	MAX	MIN	TYP‡	MAX	
V_{IK}	V_{CC} = MIN,	I_I = −18 mA			−1.2			−1.2	V
V_{OH}	V_{CC} = MIN,	V_{IH} = 2 V, I_{OH} = −1 mA	2.5	3.4		2.7	3.4		V
V_{OL}	V_{CC} = MIN,	V_{IL} = 0.8 V, I_{OL} = 20 mA			0.5			0.5	V
I_I	V_{CC} = MAX,	V_I = 5.5 V			1			1	mA
I_{IH}	V_{CC} = MAX,	V_I = 2.7 V			50			50	μA
I_{IL}	V_{CC} = MAX,	V_I = 0.5 V			−2			−2	mA
I_{OS} §	V_{CC} = MAX		−40		−100	−40		−100	mA
I_{CCH}	V_{CC} = MAX,	See Note 2		18	32		18	32	mA
I_{CCL}	V_{CC} = MAX,	V_I = 0 V		38	68		38	68	mA

† For conditions shown as MIN or MAX, use the appropriate value specified under recommended operating conditions.
‡ All typical values are at V_{CC} = 5 V, T_A = 25°C.
§ Not more than one output should be shorted at a time and the duration of the short-circuit should not exceed one second.
NOTE 2: One input at 4.5 V, all others at GND.

switching characteristics, V_{CC} = 5 V, T_A = 25°C (see note 3)

PARAMETER	FROM (INPUT)	TO (OUTPUT)	TEST CONDITIONS		MIN	TYP	MAX	UNIT
t_{PLH}	A or B	Y	R_L = 280 Ω,	C_L = 15 pF		4	7	ns
t_{PHL}						4	7	ns
t_{PLH}	A or B	Y	R_L = 280 Ω,	C_L = 50 pF		5		ns
t_{PHL}						5		ns

NOTE 3: Load circuits and voltage waveforms are shown in Section 1.

QUADRUPLE 2-INPUT POSITIVE-NOR BUFFERS WITH OPEN-COLLECTOR OUTPUTS

DECEMBER 1983 - REVISED MARCH 1988

- **Package Options Include Plastic "Small Outline" Packages, Ceramic Chip Carriers and Flat Packages, and Plastic and Ceramic DIPs**
- **Dependable Texas Instruments Quality and Reliability**

description

These devices contain four independent 2-input NOR buffer gates with open-collector outputs. Open-collector outputs require resistive pull-up to perform logically but can deliver higher V_{OH} levels and are commonly used in wired-AND applications.

The SN5433 and SN54LS33 are characterized for operation over the full military temperature range of −55°C to 125°C. The SN7433, and SN74LS33 are characterized for operation from 0°C to 70°C.

FUNCTION TABLE (each gate)

INPUTS		OUTPUT
A	B	Y
H	X	L
X	H	L
L	L	H

logic symbol†

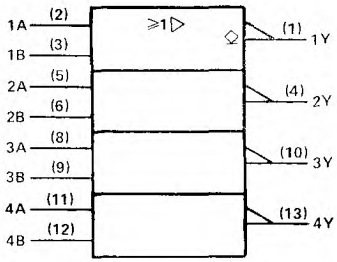

† This symbol is in accordance with ANSI/IEEE Std 91-1984 and IEC Publication 617-12.
Pin numbers shown are for D, J, N, and W packages.

SN5433, SN54LS33 . . . J OR W PACKAGE
SN7433 . . . N PACKAGE
SN74LS33 . . . D OR N PACKAGE
(TOP VIEW)

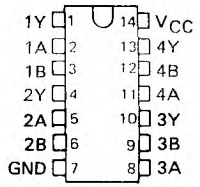

SN54LS33 . . . FK PACKAGE
(TOP VIEW)

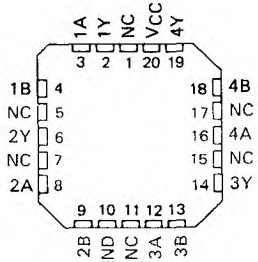

NC - No internal connection

logic diagram

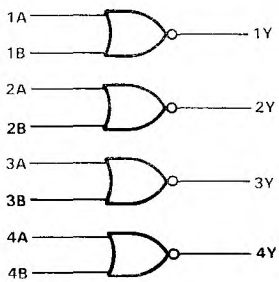

positive logic

$Y = \overline{A \cdot B}$ or $Y = \overline{A} + \overline{B}$

PRODUCTION DATA documents contain information current as of publication date. Products conform to specifications per the terms of Texas Instruments standard warranty. Production processing does not necessarily include testing of all parameters.

schematics (each gate)

'33

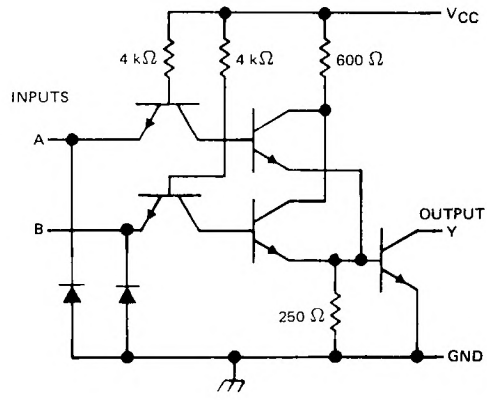

'LS33

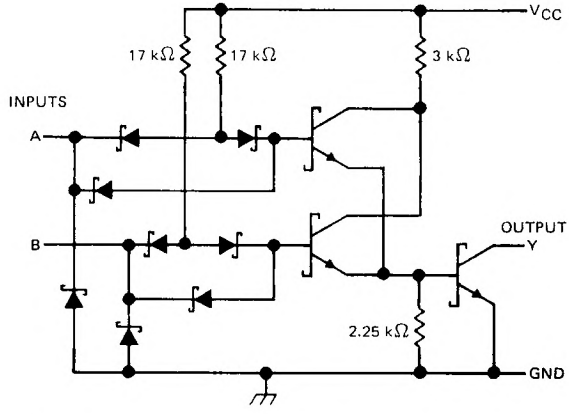

Resistor values shown are nominal.

absolute maximum ratings over operating free-air temperature range (unless otherwise noted)

Supply voltage, V_{CC} (see Note 1)	7 V
Input voltage: '33	5.5 V
'LS33	7 V
Off-state output voltage	7 V
Operating free-air temperature: SN54'	−55°C to 125°C
SN74'	0°C to 70°C
Storage temperature range	−65°C to 150°C

NOTE 1: Voltage values are with respect to network ground terminal.

TEXAS INSTRUMENTS
POST OFFICE BOX 655012 • DALLAS, TEXAS 75265

recommended operating conditions

		SN5433			SN7433			UNIT
		MIN	NOM	MAX	MIN	NOM	MAX	
V_{CC}	Supply voltage	4.5	5	5.5	4.75	5	5.25	V
V_{IH}	High-level input voltage	2			2			V
V_{IL}	Low-level input voltage			0.8			0.8	V
V_{OH}	High-level output voltage			5.5			5.5	V
I_{OL}	Low-level output current			48			48	mA
T_A	Operating free-air temperature	−55		125	0		70	°C

electrical characteristics over recommended operating free-air temperature range (unless otherwise noted)

PARAMETER	TEST CONDITIONS†	SN5433			SN7433			UNIT
		MIN	TYP‡	MAX	MIN	TYP‡	MAX	
V_{IK}	V_{CC} = MIN, I_I = −12 mA			−1.5			−1.5	V
I_{OH}	V_{CC} = MIN, V_{IL} = 0.8 V, V_{OH} = 5.5 V						0.25	mA
	V_{CC} = MIN, V_{IL} = 0.7 V, V_{OH} = 5.5 V			0.25				
V_{OL}	V_{CC} = MIN, V_{IH} = 2 V, I_{OL} = 16 mA		0.2	0.4		0.2	0.4	V
I_I	V_{CC} = MAX, V_I = 5.5 V			1			1	mA
I_{IH}	V_{CC} = MAX, V_I = 2.4 V			40			40	μA
I_{IL}	V_{CC} = MAX, V_I = 0.4 V			−1.6			−1.6	mA
I_{CCH}	V_{CC} = MAX, V_I = 0		3	6		3	6	mA
I_{CCL}	V_{CC} = MAX, See Note 2		9	16.5		9	16.5	mA

†For conditions shown as MIN or MAX, use the appropriate value specified under recommended operating conditions.
‡All typical values are at V_{CC} = 5 V, T_A = 25°C.
NOTE 2: One input at 4.5 V, all others at 0 V.

switching characteristics, V_{CC} = 5 V, T_A = 25°C (see Figure 1)

PARAMETER	FROM (INPUT)	TO (OUTPUT)	TEST CONDITIONS	MIN	TYP	MAX	UNIT
t_{PLH}	A or B	Y	R_L = 133 kΩ, C_L = 50 pF		10	15	ns
t_{PHL}					12	18	ns
t_{PLH}			R_L = 133 kΩ, C_L = 150 pF		15	22	ns
t_{PHL}					16	24	ns

NOTE 3: Load circuits and voltage waveforms are shown in Section 1.

recommended operating conditions

		SN54LS33			SN74LS33			UNIT
		MIN	NOM	MAX	MIN	NOM	MAX	
V_{CC}	Supply voltage	4.5	5	5.5	4.75	5	5.25	V
V_{IH}	High-level input voltage	2			2			V
V_{IL}	Low-level input voltage			0.7			0.8	V
V_{OH}	High-level output voltage			5.5			5.5	V
I_{OL}	Low-level output current			12			24	mA
T_A	Operating free-air temperature	−55		125	0		70	°C

electrical characteristics over recommended operating free-air temperature range (unless otherwise noted)

PARAMETER	TEST CONDITIONS†			SN54LS33			SN74LS33			UNIT
				MIN	TYP‡	MAX	MIN	TYP‡	MAX	
V_{IK}	V_{CC} = MIN,	I_I = −18 mA				−1.5			−1.5	V
I_{OH}	V_{CC} = MIN,	V_{IH} = 2 V,	V_{IL} = MAX, V_{OH} = 5.5 V						0.25	mA
V_{OL}	V_{CC} = MIN,	V_{IH} = 2 V,	V_{IL} = MAX, I_{OL} = 12 mA		0.25	0.4		0.25	0.4	V
	V_{CC} = MIN,	V_{IL} = MAX,	I_{OL} = 24 mA					0.35	0.5	
I_I	V_{CC} = MAX,	V_I = 7 V				0.1			0.1	mA
I_{IH}	V_{CC} = MAX,	V_I = 2.7 V				20			20	μA
I_{IL}	V_{CC} = MAX,	V_I = 0.4 V				−0.4			−0.4	mA
I_{CCH}	V_{CC} = MAX,	V_I = 0			1.8	3.6		1.8	3.6	mA
I_{CCL}	V_{CC} = MAX,	See Note 2			6.9	13.8		6.9	13.8	mA

†For conditions shown as MIN or MAX, use the appropriate value specified under recommended operating conditions.
‡All typical values are at V_{CC} = 5 V, T_A = 25°C.
NOTE 2: One input at 4.5 V, all others at 0 V

switching characteristics, V_{CC} = 5 V, T_A = 25°C (see note 3)

PARAMETER	FROM (INPUT)	TO (OUTPUT)	TEST CONDITIONS	MIN	TYP	MAX	UNIT
t_{PLH}	A or B	Y	R_L = 667 Ω, C_L = 45 pF		20	32	ns
t_{PHL}					18	28	ns

NOTE 3: Load circuits and voltage waveforms are shown in Section 1.

TEXAS INSTRUMENTS
POST OFFICE BOX 655012 • DALLAS, TEXAS 75265

- Package Options Include Plastic "Small Outline" Packages, Ceramic Chip Carriers and Flat Packages, and Plastic and Ceramic DIPs
- Dependable Texas Instruments Quality and Reliability

description

These devices contain four independent 2-input NAND buffer gates.

The SN5437, SN54LS37 and SN54S37 are characterized for operation over the full military range of −55°C to 125°C. The SN7437, SN74LS37 and SN74S37 are characterized for operation from 0°C to 70°C.

FUNCTION TABLE (each gate)

INPUTS		OUTPUT
A	B	Y
H	H	L
L	X	H
X	L	H

logic symbol†

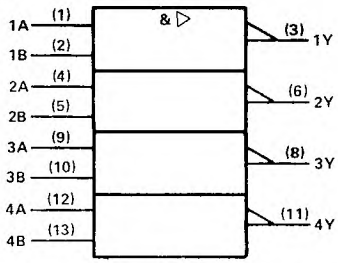

† This symbol is in accordance with ANSI/IEEE Std 91-1984 and IEC Publication 617-12

Pin numbers shown are for D, J, N, and W packages.

SN5437, SN54LS37, SN54S37 . . . J OR W PACKAGE
SN7437 . . . N PACKAGE
SN74LS37, SN74S37 . . . D OR N PACKAGE
(TOP VIEW)

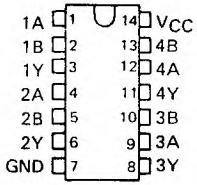

SN54LS37, SN54S37 . . . FK PACKAGE
(TOP VIEW)

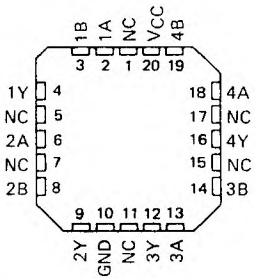

NC – No internal connection

logic diagram

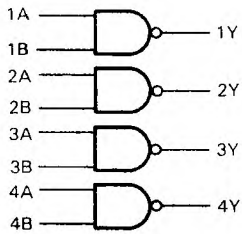

positive logic

$$Y = \overline{A \cdot B} \text{ or } Y = \overline{A} + \overline{B}$$

2 TTL Devices

PRODUCTION DATA documents contain information current as of publication date. Products conform to specifications per the terms of Texas Instruments standard warranty. Production processing does not necessarily include testing of all parameters.

schematics (each gate)

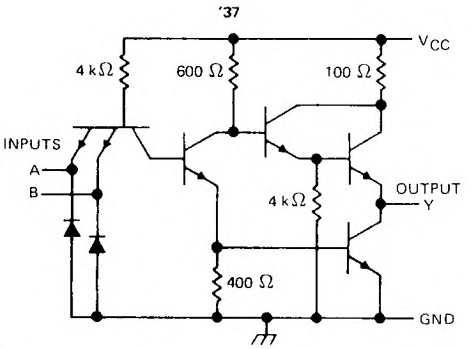

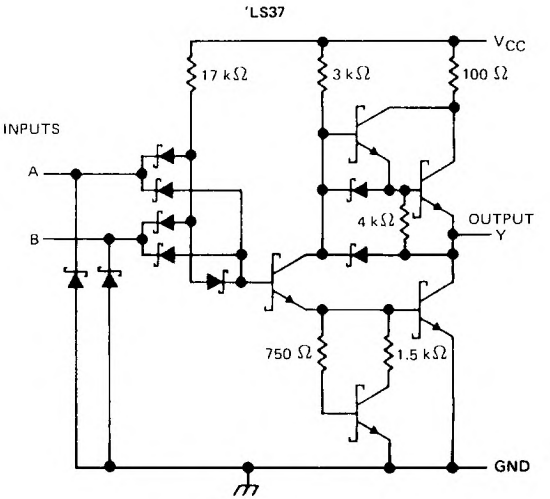

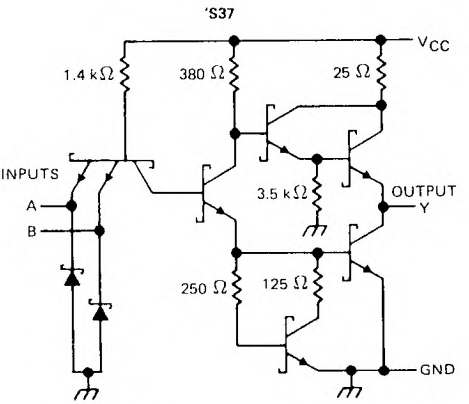

Resistor values shown are nominal

absolute maximum ratings over operating free-air temperature range (unless otherwise noted)

Supply voltage, V_{CC} (see Note 1) . . . . . 7 V
Input voltage: '37, 'S37 . . . . . 5.5 V
'LS37 . . . . . 7 V
Operating free-air temperature: SN54' . . . . . −55°C to 125°C
SN74' . . . . . 0°C to 70°C
Storage temperature range . . . . . −65°C to 150°C

NOTE 1: Voltage values are with respect to network ground terminal.

TEXAS INSTRUMENTS
POST OFFICE BOX 655012 • DALLAS, TEXAS 75265

recommended operating conditions

		SN5437			SN7437			UNIT
		MIN	NOM	MAX	MIN	NOM	MAX	
V_{CC}	Supply voltage	4.5	5	5.5	4.75	5	5.25	V
V_{IH}	High-level input voltage	2			2			V
V_{IL}	Low-level input voltage			0.8			0.8	V
I_{OH}	High-level output current			−1.2			−1.2	mA
I_{OL}	Low-level output current			48			48	mA
T_A	Operating free-air temperature	−55		125	0		70	°C

electrical characteristics over recommended operating free-air temperature range (unless otherwise noted)

PARAMETER	TEST CONDITIONS†			SN5437			SN7437			UNIT
				MIN	TYP‡	MAX	MIN	TYP‡	MAX	
V_{IK}	V_{CC} = MIN,	I_I = −12 mA				−1.5			−1.5	V
V_{OH}	V_{CC} = MIN,	V_{IL} = 0.8 V,	I_{OH} = −1.2 mA	2.4	3.3		2.4	3.3		V
V_{OL}	V_{CC} = MIN,	V_{IH} = 2 V,	I_{OL} = 48 mA		0.2	0.4		0.2	0.4	V
I_I	V_{CC} = MAX,	V_I = 5.5 V				1			1	mA
I_{IH}	V_{CC} = MAX,	V_I = 2.4 V				40			40	μA
I_{IL}	V_{CC} = MAX,	V_I = 0.4 V				−1.6			−1.6	mA
I_{OS}§	V_{CC} = MAX			−20		−70	−18		−70	mA
I_{CCH}	V_{CC} = MAX,	V_I = 0 V			9	15.5		9	15.5	mA
I_{CCL}	V_{CC} = MAX,	V_I = 4.5 V			34	54		34	54	mA

† For conditions shown as MIN or MAX, use the appropriate value specified under recommended operating conditions.
‡ All typical values are at V_{CC} = 5 V, T_A = 25°C.
§ Not more than one output should be shorted at a time, and the duration of the short circuit should not exceed one second.

switching characteristics, V_{CC} = 5 V, T_A = 25°C (see note 2)

PARAMETER	FROM (INPUT)	TO (OUTPUT)	TEST CONDITIONS	MIN	TYP	MAX	UNIT
t_{PLH}	A or B	Y	R_L = 133 Ω, C_L = 45 pF		13	22	ns
t_{PHL}					8	15	ns

NOTE 2: Load circuits and voltage waveforms are shown in Section 1.

recommended operating conditions

		SN54LS37			SN74LS37			UNIT
		MIN	NOM	MAX	MIN	NOM	MAX	
V_{CC}	Supply voltage	4.5	5	5.5	4.75	5	5.25	V
V_{IH}	High-level input voltage	2			2			V
V_{IL}	Low-level input voltage			0.7			0.8	V
I_{OH}	High-level output current			−1.2			−1.2	mA
I_{OL}	Low-level output current			12			24	mA
T_A	Operating free-air temperature	−55		125	0		70	°C

electrical characteristics over recommended operating free-air temperature range (unless otherwise noted)

PARAMETER	TEST CONDITIONS †			SN54LS37			SN74LS37			UNIT
				MIN	TYP‡	MAX	MIN	TYP‡	MAX	
V_{IK}	V_{CC} = MIN,	I_I = −18 mA				−1.5			−1.5	V
V_{OH}	V_{CC} = MIN,	V_{IL} = MAX,	I_{OH} = −1.2 mA	2.5	3.4		2.7	3.4		V
V_{OL}	V_{CC} = MIN,	V_{IH} = 2 V,	I_{OL} = 12 mA		0.25	0.4		0.25	0.4	V
	V_{CC} = MIN,	V_{IH} = 2 V,	I_{OL} = 24 mA					0.35	0.5	
I_I	V_{CC} = MAX,	V_I = 7 V				0.1			0.1	mA
I_{IH}	V_{CC} = MAX,	V_I = 2.7 V				20			20	μA
I_{IL}	V_{CC} = MAX,	V_I = 0.4 V				−0.4			−0.4	mA
I_{OS}§	V_{CC} = MAX			−30		−130	−30		−130	mA
I_{CCH}	V_{CC} = MAX,	V_I = 0 V			0.9	2		0.9	2	mA
I_{CCL}	V_{CC} = MAX,	V_I = 4.5 V			6	12		6	12	mA

† For conditions shown as MIN or MAX, use the appropriate value specified under recommended operating conditions.
‡ All typical values are at V_{CC} = 5 V, T_A = 25°C.
§ Not more than one output should be shorted at a time, and the duration of the short-circuit should not exceed one second.

switching characteristics, V_{CC} = 5 V, T_A = 25°C (see note 2)

PARAMETER	FROM (INPUT)	TO (OUTPUT)	TEST CONDITIONS	MIN	TYP	MAX	UNIT
t_{PLH}	A or B	Y	R_L = 667 Ω, C_L = 45 pF		12	24	ns
t_{PHL}					12	24	ns

NOTE 2: Load circuits and voltage waveforms are shown in Section 1.

TEXAS INSTRUMENTS
POST OFFICE BOX 655012 • DALLAS, TEXAS 75265

recommended operating conditions

		SN54S37			SN74S37			UNIT
		MIN	NOM	MAX	MIN	NOM	MAX	
V_{CC}	Supply voltage	4.5	5	5.5	4.75	5	5.25	V
V_{IH}	High-level input voltage	2			2			V
V_{IL}	Low-level input voltage			0.8			0.8	V
I_{OH}	High-level output current			−3			−3	mA
I_{OL}	Low-level output current			60			60	mA
T_A	Operating free-air temperature	−55		125	0		70	°C

electrical characteristics over recommended operating free-air temperature range (unless otherwise noted)

PARAMETER	TEST CONDITIONS †			SN54S37			SN74S37			UNIT
				MIN	TYP‡	MAX	MIN	TYP‡	MAX	
V_{IK}	V_{CC} =	I_I = −18 mA				−1.2			−1.2	V
V_{OH}	V_{CC} =	V_{IL} = 0.8 V,	I_{OH} = −3 mA	2.5	3.4		2.7	3.4		V
V_{OL}	V_{CC} = MIN,	V_{IH} = 2 V,	I_{OL} = 60 mA			0.5			0.5	V
I_I	V_{CC} = MAX,	V_I = 5.5 V				1			1	mA
I_{IH}	V_{CC} = MAX,	V_I = 2.7 V				0.1			0.1	mA
I_{IL}	V_{CC} = MAX,	V_I = 0.5 V				−4			−4	mA
I_{OS}§	V_{CC} = MAX			−50		−225	−50		−225	mA
I_{CCH}	V_{CC} = MAX,	V_I = 0 V			20	36		20	36	mA
I_{CCL}	V_{CC} = MAX,	V_I = 4.5			46	80		46	80	mA

† For conditions shown as MIN or MAX, use the appropriate value specified under recommended operating conditions.
‡ All typical values are at V_{CC} = 5 V, T_A = 25°C.
§ Not more than one output should be shorted at a time, and the duration of the short circuit should not exceed 100 milliseconds.

switching characteristics, V_{CC} = 5 V, T_A = 25°C (see note 2)

PARAMETER	FROM (INPUT)	TO (OUTPUT)	TEST CONDITIONS		MIN	TYP	MAX	UNIT
t_{PLH}	A or B	Y	R_L = 93 Ω,	C_L = 50 pF		4	6.5	ns
t_{PHL}						4	6.5	ns
t_{PLH}			R_L = 93 Ω,	C_L = 150 pF		6		ns
t_{PHL}						6		ns

NOTE 2: Load circuits and voltage waveforms are shown in Section 1.

- **Package Options Include Plastic "Small Outline" Packages, Ceramic Chip Carriers and Flat Packages, and Plastic and Ceramic DIPs**
- **Dependable Texas Instruments Quality and Reliability**

description

These devices contain four independent 2-input NAND buffer gates with open-collector outputs. The open-collector outputs require pull-up resistors to perform correctly. They may be connected to other open-collector outputs to implement active-low wired-OR or active-high wired-AND functions. Open-collector devices are often used to generate high V_{OH} levels.

The SN5438, SN54LS38, and SN54S38 are characterized for operation over the full military temperature range of −55°C to 125°C. The SN7438, SN74LS38, and SN74S38 are characterized for operation from 0°C to 70°C.

FUNCTION TABLE (each gate)

INPUTS		OUTPUT
A	B	Y
H	H	L
L	X	H
X	L	H

logic symbol†

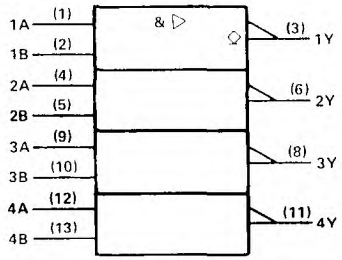

† This symbol is in accordance with ANSI/IEEE Std 91-1984 and IEC Publication 617-12.

Pin numbers shown are for D, J, N, and W packages.

SN5438, SN54LS38, SN54S38 . . . J OR W PACKAGE
SN7438 . . . N PACKAGE
SN74LS38, SN74S38 . . . D OR N PACKAGE
(TOP VIEW)

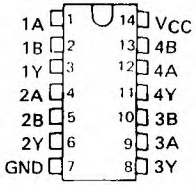

SN54LS38, SN54S38 . . . FK PACKAGE
(TOP VIEW)

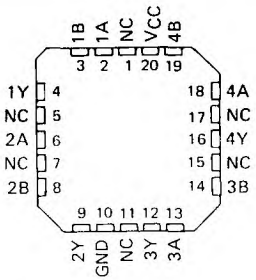

NC – No internal connection

logic diagram

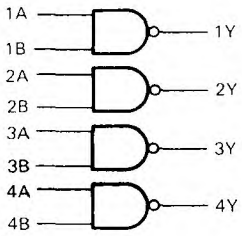

positive logic

$Y = \overline{A \cdot B}$ or $Y = \overline{A} + \overline{B}$

PRODUCTION DATA documents contain information current as of publication date. Products conform to specifications per the terms of Texas Instruments standard warranty. Production processing does not necessarily include testing of all parameters.

schematics (each gate)

'38

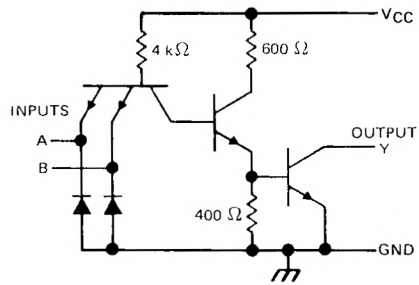

'LS38

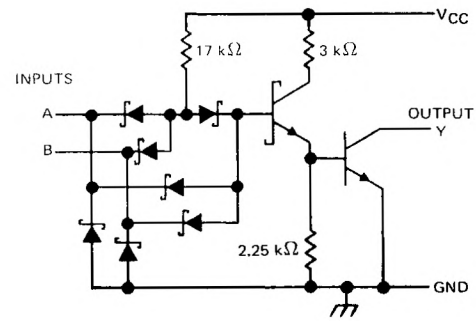

'S38

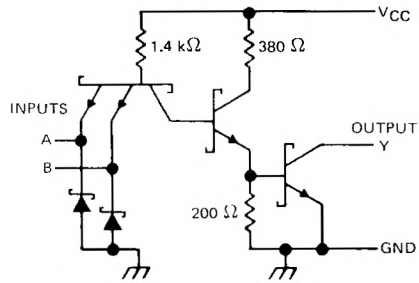

Resistor values shown are nominal.

absolute maximum ratings over operating free-air temperature (unless otherwise noted)

Supply voltage, V_{CC} (see Note 1) . . . . . 7 V
Input voltage: '38 . . . . . 5.5 V
LS38 . . . . . 7 V
Off-state output voltage . . . . . 7 V
Operating free-air temperature range: SN54' . . . . . −55°C to 125°C
SN74' . . . . . 0°C to 70°C
Storage temperature range . . . . . −65°C to 150°C

NOTE 1: Voltage values are with respect to network ground terminal.

recommended operating conditions

		SN5438			SN7438			UNIT
		MIN	NOM	MAX	MIN	NOM	MAX	
V_{CC}	Supply voltage	4.5	5	5.5	4.75	5	5.25	V
V_{IH}	High-level input voltage	2			2			V
V_{IL}	Low-level input voltage			0.8			0.8	V
V_{OH}	High-level output voltage			5.5			5.5	V
I_{OL}	Low-level output current			48			48	mA
T_A	Operating free-air temperature	−55		125	0		70	°C

electrical characteristics over recommended operating free-air temperature range (unless otherwise noted)

PARAMETER	TEST CONDITIONS†	SN5438			SN7438			UNIT
		MIN	TYP‡	MAX	MIN	TYP‡	MAX	
V_{IK}	V_{CC} = MIN, I_I = −12 mA			−1.5			−1.5	V
I_{OH}	V_{CC} = MIN, V_{IL} = 0.8 V, V_{OH} = 5.5 V						0.25	mA
	V_{CC} = MIN, V_{IL} = 0.7 V, V_{OH} = 5.5 V			0.25				
V_{OL}	V_{CC} = MIN, V_{IH} = 2 V, I_{OL} = 16 mA			0.4			0.4	V
I_I	V_{CC} = MAX, V_I = 5.5 V			1			1	mA
I_{IH}	V_{CC} = MAX, V_I = 2.4 V			40			40	μA
I_{IL}	V_{CC} = MAX, V_I = 0.4 V			−1.6			−1.6	mA
I_{CCH}	V_{CC} = MAX, V_I = 0		5	8.5		5	8.5	mA
I_{CCL}	V_{CC} = MAX, V_I = 4.5 V		34	54		34	54	mA

†For conditions shown as MIN or MAX, use the appropriate value specified under recommended operating conditions.
‡All typical values are at V_{CC} = 5 V, T_A = 25°C.

switching characteristics, V_{CC} = 5 V, T_A = 25°C (see note 2)

PARAMETER	FROM (INPUT)	TO (OUTPUT)	TEST CONDITIONS	MIN	TYP	MAX	UNIT
t_{PLH}	A or B	Y	R_L = 133 Ω, C_L = 45 pF		14	22	ns
t_{PHL}					11	18	ns

NOTE 2: Load circuits and voltage waveforms are shown in Section 1.

recommended operating conditions

		SN54LS38			SN74LS38			UNIT
		MIN	NOM	MAX	MIN	NOM	MAX	
V_{CC}	Supply voltage	4.5	5	5.5	4.75	5	5.25	V
V_{IH}	High-level input voltage	2			2			V
V_{IL}	Low-level input voltage			0.7			0.8	V
V_{OH}	High-level output voltage			5.5			5.5	V
I_{OL}	Low-level output current			12			24	mA
T_A	Operating free-air temperature	– 55		125	0		70	°C

electrical characteristics over recommended operating free-air temperature range (unless otherwise noted)

PARAMETER	TEST CONDITIONS†			SN54LS38			SN74LS38			UNIT
				MIN	TYP‡	MAX	MIN	TYP‡	MAX	
V_{IK}	V_{CC} = MIN,	I_I = – 18 mA				– 1.5			– 1.5	V
I_{OH}	V_{CC} = MIN,	V_{IL} = MAX,	V_{OH} = 5.5 V			0.25			0.25	mA
V_{OL}	V_{CC} = MIN,	V_{IH} = 2 V,	I_{OL} = 12 mA		0.25	0.4		0.25	0.4	V
	V_{CC} = MIN,	V_{IH} = 2 V,	I_{OL} = 24 mA					0.35	0.5	
I_I	V_{CC} = MAX,	V_I = 7 V				0.1			0.1	mA
I_{IH}	V_{CC} = MAX,	V_I = 2.7 V				20			20	µA
I_{IL}	V_{CC} = MAX,	V_I = 0.4 V				– 0.4			– 0.4	mA
I_{CCH}	V_{CC} = MAX,	V_I = 0			0.9	2		0.9	2	mA
I_{CCL}	V_{CC} = MAX,	V_I = 4.5 V			6	12		6	12	mA

† For conditons shown as MIN or MAX, use the appropriate value specified under recommended operating conditions.
‡ All typical values are at V_{CC} = 5 V, T_A = 25°C.

switching characteristics, V_{CC} = 5 V, T_A = 25°C (see note 2)

PARAMETER	FROM (INPUT)	TO (OUTPUT)	TEST CONDITIONS	MIN	TYP	MAX	UNIT
t_{PLH}	A or B	Y	R_L = 667 Ω, C_L = 45 pF		20	32	ns
t_{PHL}					18	28	ns

NOTE 2: Load circuits and voltage waveforms are shown in Section 1.

TEXAS INSTRUMENTS
POST OFFICE BOX 655012 • DALLAS, TEXAS 75265

recommended operating conditions

		SN54S38			SN74S38			UNIT
		MIN	NOM	MAX	MIN	NOM	MAX	
V_{CC}	Supply voltage	4.5	5	5.5	4.75	5	5.25	V
V_{IH}	High-level input voltage	2			2			V
V_{IL}	Low-level input voltage			0.8			0.8	V
V_{OH}	High-level output voltage			5.5			5.5	V
I_{OL}	Low-level output current			60			60	mA
T_A	Operating free-air temperature	−55		125	0		70	°C

electrical characteristics over recommended operating free-air temperature range (unless otherwise noted)

PARAMETER	TEST CONDITIONS†			SN54S38			SN74S38			UNIT
				MIN	TYP‡	MAX	MIN	TYP‡	MAX	
V_{IK}	V_{CC} = MIN,	I_I = −18 mA				−1.2			−1.2	V
I_{OH}	V_{CC} = MIN,	V_{IL} = 0.8 V,	V_{OH} = 5.5 V						0.25	mA
	V_{CC} = MIN,	V_{IL} = 0.7 V,	V_{OH} = 5.5 V			0.25				
V_{OL}	V_{CC} = MIN,	V_{IH} = 2 V,	I_{OL} = 60 mA			0.5			0.5	V
I_I	V_{CC} = MAX,	V_I = 5.5 V				1			1	mA
I_{IH}	V_{CC} = MAX,	V_I = 2.4 V				0.1			0.1	mA
I_{IL}	V_{CC} = MAX,	V_I = 0.5 V				−4			−4	mA
I_{CCH}	V_{CC} = MAX,	V_I = 0			20	36		20	36	mA
I_{CCL}	V_{CC} = MAX,	V_I = 4.5 V			46	80		46	80	mA

†For conditions shown as MIN or MAX, use the appropriate value specified under recommended operating conditions.
‡All typical values are at V_{CC} = 5 V, T_A = 25°C.

switching characteristics, V_{CC} = 5 V, T_A = 25°C (see note 2)

PARAMETER	FROM (INPUT)	TO (OUTPUT)	TEST CONDITIONS		MIN	TYP	MAX	UNIT
t_{PLH}	A or B	Y	R_L = 93 Ω,	C_L = 50 pF		6.5	10	ns
t_{PHL}						6.5	10	ns
t_{PLH}			R_L = 93 Ω,	C_L = 150 pF		9		ns
t_{PHL}						8.5		ns

NOTE 2: Load circuits and voltage waveforms are shown in Section 1.

- **Current Sinking Capability up to 80 mA**
- **Guaranteed Fan-Out of 30 Series 54/74 Loads**
- **Dependable Texas Instruments Quality and Reliability**

SN5439 . . . J PACKAGE
SN7439 . . . N PACKAGE
(TOP VIEW)

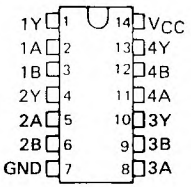

description

These devices contain four independent 2-input NAND buffers. The open-collector outputs require pull-up resistors to perform correctly. They may be connected to other open-collector outputs to implement active-low wired-OR or active-high wired-AND functions. Open-collector devices are often used to generate higher V_{OH} levels.

The SN5439 is characterized for operation over the full military temperature range of −55°C to 125°C. The SN7439 is characterized for operation from 0°C to 70°C.

logic symbol†

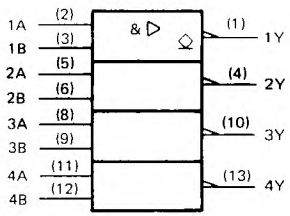

† This symbol is in accordance with ANSI/IEEE Std 91-1984 and IEC Publication 617-12.

FUNCTION TABLE (each gate)

INPUTS		OUTPUT
A	B	Y
H	H	L
L	X	H
X	L	H

schematics (each gate)

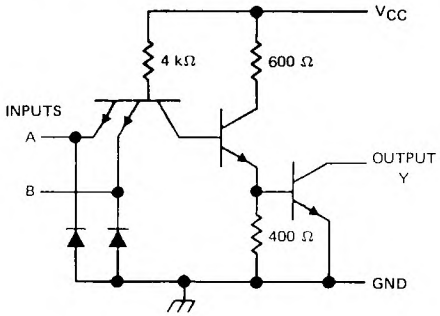

logic diagram

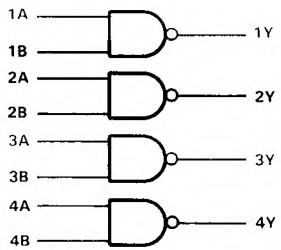

positive logic

$Y = \overline{A \cdot B}$ or $Y = \overline{A} + \overline{B}$

PRODUCTION DATA documents contain information current as of publication date. Products conform to specifications per the terms of Texas Instruments standard warranty. Production processing does not necessarily include testing of all parameters.

absolute maximum ratings over operating free-air temperature range (unless otherwise noted)

Supply voltage, V_{CC} (see Note 1) 7V
Input voltage 7V
Off-state output voltage 7V
Operating free-air temperature range: SN5439 . . . . . −55°C to 125°C
SN7439 . . . . . 0°C to 70°C
Storage temperature range . . . . . −65°C to 150°C

NOTE 1 Voltage values are with respect to network ground terminal

recommended operating conditions

		SN5439			SN7439			UNIT
		MIN	NOM	MAX	MIN	NOM	MAX	
V_{CC}	Supply voltage	4.5	5	5.5	4.5	5	5.5	V
V_{IH}	High-level input voltage	2			2			V
V_{IL}	Low-level input voltage			0.8			0.8	V
V_{OH}	High-level output voltage			5.5			5.5	V
I_{OL}	Low-level output voltage			60			60	mA
							80†	
T_A	Operating free-air temperature	−55		125	0		70	°C

†The extended limit applies only if V_{CC} is maintained between 4.75 and 5.25 V.

electrical characteristics over recommended operating free-air temperature range (unless otherwise noted)

PARAMETER	TEST CONDITIONS†	SN5439			SN7439			UNIT
		MIN	TYP	MAX	MIN	TYP	MAX	
V_{IK}	V_{CC} = MIN, I_I = −12 mA			−1.5			−1.5	V
I_{OH}	V_{CC} = MIN, V_{IL} = 0.8 V, V_{OH} = 5.5 V						0.25	mA
	V_{CC} = MIN, V_{IL} = 0.7 V, V_{OH} = 5.5 V			0.25				
V_{OL}	V_{CC} = MIN, I_{OL} = 48 mA			0.4			0.4	V
	V_{CC} = MIN, I_{OL} = 60 mA			0.5			0.5	
	V_{CC} = 4.75 V, I_{OL} = 80 mA						0.6	
I_I	V_{CC} = MAX, V_I = 5.5 V			1			1	mA
I_{IH}	V_{CC} = MAX, V_I = 2.4 V			40			40	μA
I_{IL}	V_{CC} = MAX, V_I = 0.4 V			−1.6			−1.6	mA
I_{CCH}	V_{CC} = MAX, V_I = 0			54			54	mA

†For conditions shown as MIN or MAX, use the appropriate value specified under recommended operating conditions.

switching characteristics, V_{CC} = 5 V, T_A = 25°C (see note 2)

PARAMETER	FROM (INPUT)	TO (OUTPUT)	TEST CONDITIONS	SN5439		SN7439		UNIT
				MIN	MAX	MIN	MAX	
t_{PLH}	A or B	Y	R_L = 133 Ω, C_L = 15 pF		22		22	ns
t_{PHL}					18		18	

NOTE 2: Load circuits and voltage waveforms are shown in Section 1

TEXAS INSTRUMENTS
POST OFFICE BOX 655012 • DALLAS, TEXAS 75265

- **Package Options Include Plastic "Small Outline" Packages, Ceramic Chip Carriers and Flat Packages in Addition to Plastic and Ceramic DIPs**
- **Dependable Texas Instruments Quality and Reliability**

description

These devices contain two independent 4-input NAND buffer gates.

The SN5440, SN54LS40, and SN54S40 are characterized for operation over the full military temperature range of −55°C to 125°C. The SN7440, SN74LS40, and SN74S40 are characterized for operation from 0°C to 70°C.

FUNCTION TABLE (each gate)

INPUTS				OUTPUT
A	B	C	D	Y
H	H	H	H	L
L	X	X	X	H
X	L	X	X	H
X	X	L	X	H
X	X	X	L	H

logic symbol†

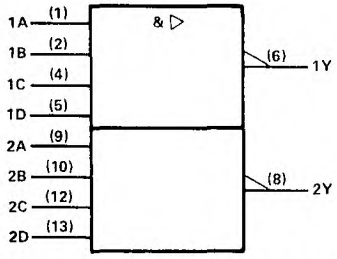

†This symbol is in accordance with ANSI/IEEE Std. 91-1984 and IEC Publication 617-12.
Pin numbers shown are for D, J, N, and W packages.

SN5440 . . . J PACKAGE
SN54LS40, SN54S40 . . . J OR W PACKAGE
SN7440 . . . N PACKAGE
SN74LS40, SN74S40 . . . D OR N PACKAGE
(TOP VIEW)

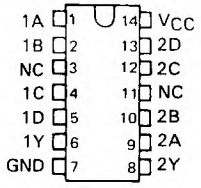

SN5440 . . . W PACKAGE
(TOP VIEW)

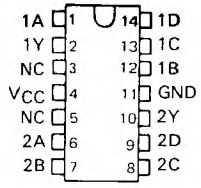

SN54LS40, SN54S40 . . . FK PACKAGE
(TOP VIEW)

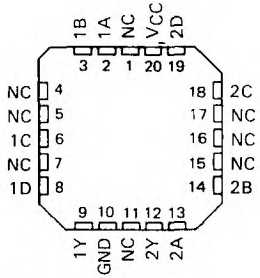

NC – No internal connection

logic diagram

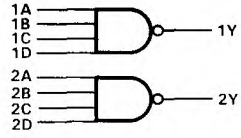

positive logic

$$Y = \overline{A \cdot B \cdot C \cdot D} \text{ or } Y = \overline{A} + \overline{B} + \overline{C} + \overline{D}$$

schematics (each gate)

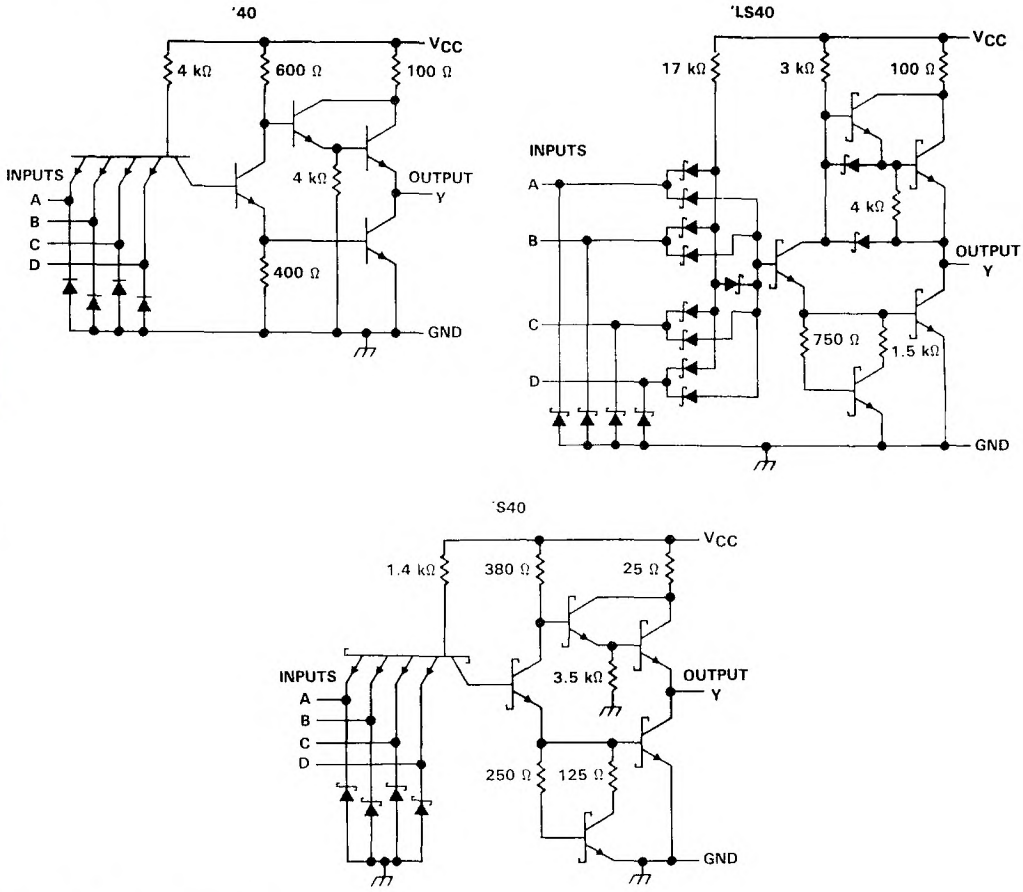

Resistor values shown are nominal.

absolute maximum ratings over operating free-air temperature range (unless otherwise noted)

Supply voltage, V_{CC} (see Note 1) . . . . . 7 V
Input voltage: '40, 'S40 . . . . . 5.5 V
'LS40 . . . . . 7 V
Operating free-air temperature range: SN54' . . . . . −55°C to 125°C
SN74' . . . . . 0°C to 70°C
Storage temperature range . . . . . −65°C to 150°C

NOTE 1: Voltage values are with respect to network ground terminal.

TEXAS INSTRUMENTS
POST OFFICE BOX 655012 • DALLAS, TEXAS 75265

recommended operating conditions

		SN5440			SN7440			UNIT
		MIN	NOM	MAX	MIN	NOM	MAX	
V_{CC}	Supply voltage	4.5	5	5.5	4.75	5	5.25	V
V_{IH}	High-level input voltage	2			2			V
V_{IL}	Low-level input voltage			0.8			0.8	V
I_{OH}	High-level output current			−1.2			−1.2	mA
I_{OL}	Low-level output current			48			48	mA
T_A	Operating free-air temperature	−55		125	0		70	°C

electrical characteristics over recommended operating free-air temperature range (unless otherwise noted)

PARAMETER	TEST CONDITIONS†			SN5440			SN7440			UNIT
				MIN	TYP‡	MAX	MIN	TYP‡	MAX	
V_{IK}	V_{CC} = MIN,	I_I = −12 mA				−1.5			−1.5	V
V_{OH}	V_{CC} = MIN,	V_{IL} = 0.8 V,	I_{OH} = −1.2 mA	2.4	3.3		2.4	3.3		V
V_{OL}	V_{CC} = MIN,	V_{IH} = 2 V,	I_{OL} = 48 mA		0.2	0.4		0.2	0.4	V
I_I	V_{CC} = MAX,	V_I = 5.5 V				1			1	mA
I_{IH}	V_{CC} = MAX,	V_I = 2.4 V				40			40	μA
I_{IL}	V_{CC} = MAX,	V_I = 0.4 V				−1.6			−1.6	mA
I_{OS}§	V_{CC} = MAX			−20		−70	−18		−70	mA
I_{CCH}	V_{CC} = MAX,	V_I = 0			4	8		4	8	mA
I_{CCL}	V_{CC} = MAX,	V_I = 4.5 V			17	27		17	27	mA

† For conditions shown as MIN or MAX, use the appropriate value specified under recommended operating conditions.
‡ All typical values are at V_{CC} = 5 V, T_A = 25°C.
§ Not more than one output should be shorted at a time, and the duration of the short circuit should not exceed 100 milliseconds.

switching characteristics, V_{CC} = 5 V, T_A = 25°C (see note 2)

PARAMETER	FROM (INPUT)	TO (OUTPUT)	TEST CONDITIONS		MIN	TYP	MAX	UNIT
t_{PLH}	Any	Y	R_L = 133 Ω,	C_L = 15 pF		13	22	ns
t_{PHL}						8	15	ns

NOTE 2: Load circuits and voltage waveforms are shown in Section 1.

recommended operating conditions

		SN54LS40			SN74LS40			UNIT
		MIN	NOM	MAX	MIN	NOM	MAX	
V_{CC}	Supply voltage	4.5	5	5.5	4.75	5	5.25	V
V_{IH}	High-level input voltage	2			2			V
V_{IL}	Low-level input voltage			0.7			0 8	V
I_{OH}	High-level output current			−1.2			−1.2	mA
I_{OL}	Low-level output current			12			24	mA
T_A	Operating free-air temperature	−55		125	0		70	°C

electrical characteristics over recommended operating free-air temperature range (unless otherwise noted)

PARAMETER	TEST CONDITIONS †			SN54LS40			SN74LS40			UNIT
				MIN	TYP‡	MAX	MIN	TYP‡	MAX	
V_{IK}	V_{CC} = MIN,	I_I = −18 mA				−1.5			−1.5	V
V_{OH}	V_{CC} = MIN,	V_{IL} = MAX,	I_{OH} = −1.2 mA	2.5	3.4		2.7	3.4		V
V_{OL}	V_{CC} = MIN,	V_{IH} = 2 V,	I_{OL} = 12 mA		0.25	0.4		0.25	0.4	V
	V_{CC} = MIN,	V_{IH} = 2 V,	I_{OL} = 24 mA					0.35	0.5	
I_I	V_{CC} = MAX,	V_I = 7 V				0.1			0.1	mA
I_{IH}	V_{CC} = MAX,	V_I = 2.7 V				20			20	µA
I_{IL}	V_{CC} = MAX,	V_I = 0.4 V				−0.4			−0.4	mA
I_{OS}§	V_{CC} = MAX			−30		−130	−30		−130	mA
I_{CCH}	V_{CC} = MAX,	V_I = 0			0.45	1		0.45	1	mA
I_{CCL}	V_{CC} = MAX,	V_I = 4.5 V			3	6		3	6	mA

† For conditions shown as MIN or MAX, use the appropriate value specified under recommended operating conditions.
‡ All typical values are at V_{CC} = 5 V, T_A = 25°C.
§ Not more than one output should be shorted at a time, and the duration of the short circuit should not exceed one second.

switching characteristics, V_{CC} = 5 V, T_A = 25°C (see note 2)

PARAMETER	FROM (INPUT)	TO (OUTPUT)	TEST CONDITIONS	MIN	TYP	MAX	UNIT
t_{PLH}	Any	Y	R_L = 667 Ω, C_L = 45 pF		12	24	ns
t_{PHL}					12	24	ns

NOTE 2: Load circuits and voltage waveforms are shown in Section 1

TEXAS INSTRUMENTS
POST OFFICE BOX 655012 • DALLAS, TEXAS 75265

recommended operating conditions

		SN54S40			SN74S40			UNIT
		MIN	NOM	MAX	MIN	NOM	MAX	
V_{CC}	Supply voltage	4.5	5	5.5	4.75	5	5.25	V
V_{IH}	High-level input voltage	2			2			V
V_{IL}	Low-level input voltage			0.8			0.8	V
I_{OH}	High-level output current			−3			−3	mA
I_{OL}	Low-level output current			60			60	mA
T_A	Operating free-air temperature	−55		125	0		70	°C

electrical characteristics over recommended operating free-air temperature range (unless otherwise noted)

PARAMETER	TEST CONDITIONS †			SN54S40			SN74S40			UNIT
				MIN	TYP‡	MAX	MIN	TYP‡	MAX	
V_{IK}	V_{CC} = MIN,	I_I = −18 mA				−1.2			−1.2	V
V_{OH}	V_{CC} = MIN,	V_{IL} = 0.8 V,	I_{OH} = −3 mA	2.5	3.4		2.7	3.4		V
V_{OL}	V_{CC} = MIN,	V_{IH} = 2 V,	I_{OL} = 60 mA			0.5			0.5	V
I_I	V_{CC} = MAX,	V_I = 5.5 V				1			1	mA
I_{IH}	V_{CC} = MAX,	V_I = 2.7 V				0.1			0.1	mA
I_{IL}	V_{CC} = MAX,	V_I = 0.5 V				−4			−4	mA
I_{OS}§	V_{CC} = MAX			−50		−225	−50		−225	mA
I_{CCH}	V_{CC} = MAX,	V_I = 0			10	18		10	18	mA
I_{CCL}	V_{CC} = MAX,	V_I = 4.5 V			25	44		25	44	mA

† For conditions shown as MIN or MAX, use the appropriate value specified under recommended operating conditions.
‡ All typical values are at V_{CC} = 5 V, T_A = 25°C.
§ Not more than one output should be shorted at a time, and the duration of the short-circuit should not exceed 100 milliseconds.

switching characteristics, V_{CC} = 5 V, T_A = 25°C (see note 2)

PARAMETER	FROM (INPUT)	TO (OUTPUT)	TEST CONDITIONS		MIN	TYP	MAX	UNIT
t_{PLH}	Any	Y	R_L = 93 Ω,	C_L = 50 pF		4	6.5	ns
t_{PHL}						4	6.5	ns
t_{PLH}			R_L = 93 Ω,	C_L = 150 pF		6		ns
t_{PHL}						6		ns

NOTE 2: Load circuits and voltage waveforms are shown in Section 1

MARCH 1974 REVISED MARCH 1988

- All Outputs Are High for Invalid Input Conditions
- Also for Application as
  4-Line-to-16-Line Decoders
  3-Line-to-8-Line Decoders
- Diode-Clamped Inputs

TYPES	TYPICAL POWER DISSIPATION	TYPICAL PROPAGATION DELAYS
'42A	140 mW	17 ns
'LS42	35 mW	17 ns

SN5442A, SN54LS42 . . . J OR W PACKAGE
SN7442A . . . N PACKAGE
SN74LS42 . . . D OR N PACKAGE
(TOP VIEW)

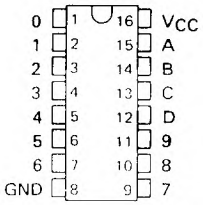

SN54LS42 . . . FK PACKAGE
(TOP VIEW)

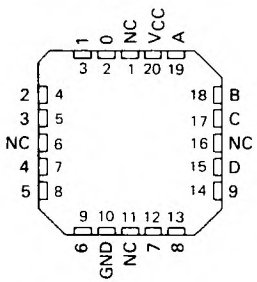

NC - No internal connection

description

These monolithic BCD-to-decimal decoders consist of eight inverters and ten four-input NAND gates. The inverters are connected in pairs to make BCD input data available for decoding by the NAND gates. Full decoding of valid input logic ensures that all outputs remain off for all invalid input conditions.

The '42A and 'LS42 feature inputs and outputs that are compatible for use with most TTL and other saturated low-level logic circuits. DC noise margins are typically one volt.

The SN5442A and SN54LS42 are characterized for operation over the full military temperature range of −55°C to 125°C. The SN7442A and SN74LS42 are characterized for operation from 0°C to 70°C.

PRODUCTION DATA documents contain information current as of publication date. Products conform to specifications per the terms of Texas Instruments standard warranty. Production processing does not necessarily include testing of all parameters.

logic symbol†

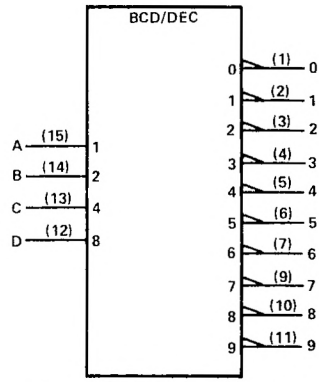

† This symbol is in accordance with ANSI/IEEE Std 91-1984 and IEC Publication 617-12.

logic diagram (positive logic)

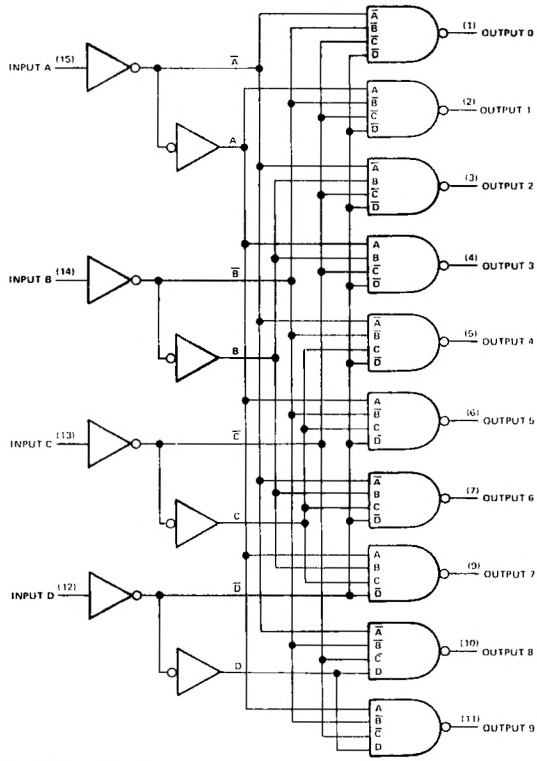

Pin numbers shown are for D, J, N, and W packages

TEXAS INSTRUMENTS
POST OFFICE BOX 655012 • DALLAS, TEXAS 75265

schematics of inputs and outputs

'42A

EQUIVALENT OF EACH INPUT

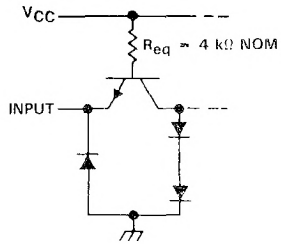

'LS42

EQUIVALENT OF EACH INPUT

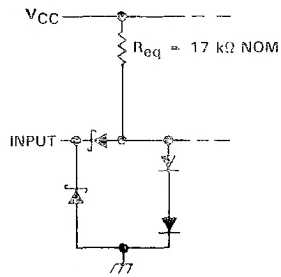

'42A

TYPICAL OF ALL OUTPUTS

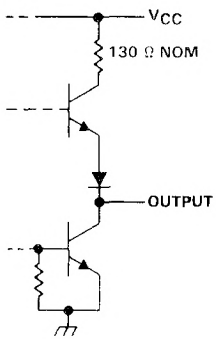

'LS42

TYPICAL OF ALL OUTPUTS

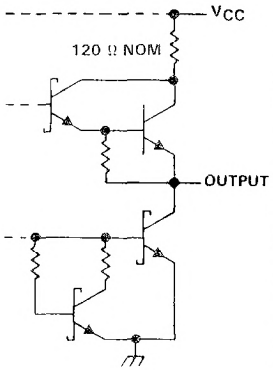

FUNCTION TABLE

NO.	BCD INPUT				DECIMAL OUTPUT									
	D	C	B	A	0	1	2	3	4	5	6	7	8	9
0	L	L	L	L	L	H	H	H	H	H	H	H	H	H
1	L	L	L	H	H	L	H	H	H	H	H	H	H	H
2	L	L	H	L	H	H	L	H	H	H	H	H	H	H
3	L	L	H	H	H	H	H	L	H	H	H	H	H	H
4	L	H	L	L	H	H	H	H	L	H	H	H	H	H
5	L	H	L	H	H	H	H	H	H	L	H	H	H	H
6	L	H	H	L	H	H	H	H	H	H	L	H	H	H
7	L	H	H	H	H	H	H	H	H	H	H	L	H	H
8	H	L	L	L	H	H	H	H	H	H	H	H	L	H
9	H	L	L	H	H	H	H	H	H	H	H	H	H	L
INVALID	H	L	H	L	H	H	H	H	H	H	H	H	H	H
	H	L	H	H	H	H	H	H	H	H	H	H	H	H
	H	H	L	L	H	H	H	H	H	H	H	H	H	H
	H	H	L	H	H	H	H	H	H	H	H	H	H	H
	H	H	H	L	H	H	H	H	H	H	H	H	H	H
	H	H	H	H	H	H	H	H	H	H	H	H	H	H

H = high level, L = low level

absolute maximum ratings over operating free-air temperature range (unless otherwise noted)

Supply voltage, V_{CC} (see Note 1) . . . . . 7 V
Input voltage: '42A . . . . . 5.5 V
'LS42 . . . . . 7 V
Operating free-air temperature range: SN5442A, SN54LS42 . . . . . −55°C to 125°C
SN7442A, SN74LS42 . . . . . 0°C to 70°C
Storage temperature range . . . . . −65°C to 150°C

NOTE 1: Voltage values are with respect to network ground terminal.

TEXAS INSTRUMENTS
POST OFFICE BOX 655012 • DALLAS, TEXAS 75265

recommended operating conditions

	SN5442A			SN7442A			UNIT
	MIN	NOM	MAX	MIN	NOM	MAX	
Supply voltage, V_{CC}	4.5	5	5.5	4.75	5	5.25	V
High-level output current, I_{OH}			-800			-800	μA
Low-level output current, I_{OL}			16			16	mA
Operating free-air temperature, T_A	−55		125	0		70	°C

electrical characteristics over recommended operating free-air temperature range (unless otherwise noted)

PARAMETER		TEST CONDITIONS†	SN5442A			SN7442A			UNIT
			MIN	TYP‡	MAX	MIN	TYP‡	MAX	
V_{IH}	High-level input voltage		2			2			V
V_{IL}	Low-level input voltage				0.8			0.8	V
V_{IK}	Input clamp voltage	V_{CC} = MIN, I_I = −12 mA			-1.5			−1.5	V
V_{OH}	High-level output voltage	V_{CC} = MIN, V_{IH} = 2 V, V_{IL} = 0.8 V, I_{OH} = −800 μA	2.4	3.4		2.4	3.4		V
V_{OL}	Low-level output voltage	V_{CC} = MIN, V_{IH} = 2 V, V_{IL} = 0.8 V, I_{OL} = 16 mA		0.2	0.4		0.2	0.4	V
I_I	Input current at maximum input voltage	V_{CC} = MAX, V_I = 5.5 V			1			1	mA
I_{IH}	High-level input current	V_{CC} = MAX, V_I = 2.4 V			40			40	μA
I_{IL}	Low level input current	V_{CC} = MAX, V_I = 0.4 V			−1.6			−1.6	mA
I_{OS}	Short-circuit output current§	V_{CC} = MAX	−20		−55	−18		−55	mA
I_{CC}	Supply current	V_{CC} = MAX, See Note 2		28	41		28	56	mA

† For conditions shown as MIN or MAX, use the appropriate values specified under recommended operating conditions.
‡ All typical values are at V_{CC} = 5 V, T_A = 25°C.
§ Not more than one output should be shorted at a time
NOTE 2. I_{CC} is measured with all outputs open and all inputs grounded

switching characteristics, V_{CC} = 5 V, T_A = 25°C

PARAMETER		TEST CONDITIONS	MIN	TYP	MAX	UNIT
t_{PHL}	Propagation delay time, high-to-low-level output from A, B, C, or D through 2 levels of logic	C_L = 15 pF, R_L = 400 Ω, See Note 3		14	25	ns
t_{PHL}	Propagation delay time, high-to-low-level output from A, B, C, or D through 3 levels of logic			17	30	ns
t_{PLH}	Propagation delay time, low-to-high-level output from A, B, C, and D through 2 levels of logic			10	25	ns
t_{PLH}	Propagation delay time, low-to-high-level output from A, B, C, and D through 3 levels of logic			17	30	ns

NOTE 3: Load circuits and voltage waveforms are shown in Section 1.

recommended operating conditions

	SN54LS42			SN74LS42			UNIT
	MIN	NOM	MAX	MIN	NOM	MAX	
Supply voltage, V_{CC}	4.5	5	5.5	4.75	5	5.25	V
High-level output current, I_{OH}			−400			−400	μA
Low-level output current, I_{OL}			4			8	mA
Operating free-air temperature, T_A	−55		125	0		70	°C

electrical characteristics over recommended operating free-air temperature range (unless otherwise noted)

PARAMETER		TEST CONDITIONS†		SN54LS42			SN74LS42			UNIT
				MIN	TYP‡	MAX	MIN	TYP‡	MAX	
V_{IH}	High-level input voltage			2			2			V
V_{IL}	Low-level input voltage					0.7			0.8	V
V_{IK}	Input clamp voltage	V_{CC} = MIN,	I_I = −18 mA			−1.5			−1.5	V
V_{OH}	High-level output voltage	V_{CC} = MIN, V_{IL} = V_{IL} max,	V_{IH} = 2 V, I_{OH} = −400 μA	2.5	3.5		2.7	3.5		V
V_{OL}	Low-level output voltage	V_{CC} = MIN, V_{IL} = V_{IL} max	V_{IH} = 2 V, I_{OL} = 4 mA		0.25	0.4		0.25	0.4	V
			I_{OL} = 8 mA					0.35	0.5	
I_I	Input current at maximum input voltage	V_{CC} = MAX,	V_I = 7 V			0.1			0.1	mA
I_{IH}	High-level input current	V_{CC} = MAX,	V_I = 2.7 V			20			20	μA
I_{IL}	Low-level input current	V_{CC} = MAX,	V_I = 0.4 V			−0.4			−0.4	mA
I_{OS}	Short-circuit output current§	V_{CC} = MAX		−20		−100	−20		−100	mA
I_{CC}	Supply current	V_{CC} = MAX,	See Note 2		7	13		7	13	mA

†For conditions shown as MIN or MAX, use the appropriate value specified under recommended operating conditions.
‡All typical values are at V_{CC} = 5 V, T_A = 25°C.
§Not more than one output should be shorted at a time, and duration of the short-circuit should not exceed one second.
NOTE 2. I_{CC} is measured with all outputs open and inputs grounded.

switching characteristics, V_{CC} = 5 V, T_A = 25°C

PARAMETER		TEST CONDITIONS	MIN	TYP	MAX	UNIT
t_{PHL}	Propagation delay time, high-to-low-level output from A, B, C, or D through 2 levels of logic	C_L = 15 pF, R_L = 2 kΩ, See Note 3		15	25	ns
t_{PHL}	Propagation delay time, high-to-low-level output from A, B, C, or D through 3 levels of logic			20	30	ns
t_{PLH}	Propagation delay time, low-to-high-level output from A, B, C, and D through 2 levels of logic			15	25	ns
t_{PLH}	Propagation delay time, low-to-high-level output from A, B, C, and D through 3 levels of logic			20	30	ns

NOTE 3: Load circuits and voltage waveforms are shown in Section 1.

TEXAS INSTRUMENTS
POST OFFICE BOX 655012 • DALLAS, TEXAS 75265

DECEMBER 1972—REVISED MARCH 1988

FOR USE AS LAMP, RELAY, OR MOS DRIVERS

featuring

- Full Decoding of Input Logic
- 80-mA Sink-Current Capability
- All Outputs Are Off for Invalid BCD Input Conditions

SN5445 . . . J OR W PACKAGE
SN7445 . . . N PACKAGE
(TOP VIEW)

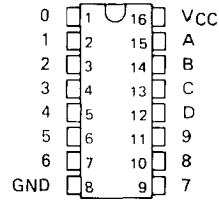

FUNCTION TABLE

NO.	INPUTS				OUTPUTS									
	O	C	B	A	0	1	2	3	4	5	6	7	8	9
0	L	L	L	L	L	H	H	H	H	H	H	H	H	H
1	L	L	L	H	H	L	H	H	H	H	H	H	H	H
2	L	L	H	L	H	H	L	H	H	H	H	H	H	H
3	L	L	H	H	H	H	H	L	H	H	H	H	H	H
4	L	H	L	L	H	H	H	H	L	H	H	H	H	H
5	L	H	L	H	H	H	H	H	H	L	H	H	H	H
6	L	H	H	L	H	H	H	H	H	H	L	H	H	H
7	L	H	H	H	H	H	H	H	H	H	H	L	H	H
8	H	L	L	L	H	H	H	H	H	H	H	H	L	H
9	H	L	L	H	H	H	H	H	H	H	H	H	H	L
INVALID	H	L	H	L	H	H	H	H	H	H	H	H	H	H
	H	L	H	H	H	H	H	H	H	H	H	H	H	H
	H	H	L	L	H	H	H	H	H	H	H	H	H	H
	H	H	L	H	H	H	H	H	H	H	H	H	H	H
	H	H	H	L	H	H	H	H	H	H	H	H	H	H
	H	H	H	H	H	H	H	H	H	H	H	H	H	H

H = high level (off), L = low level (on)

description

These monolithic BCD-to-decimal decoders/drivers consist of eight inverters and ten four-input NAND gates. The inverters are connected in pairs to make BCD input data available for decoding by the NAND gates. Full decoding of valid BCD input logic ensures that all outputs remain off for all invalid binary input conditions. These decoders feature TTL inputs and high-performance, n-p-n output transistors designed for use as indicator/relay drivers or as open-collector logic-circuit drivers. Each of the high-breakdown output transistors (30 volts) will sink up to 80 milliamperes of current. Each input is one normalized Series 54/74 load. Inputs and outputs are entirely compatible for use with TTL logic circuits, and the outputs are compatible for interfacing with most MOS integrated circuits. Power dissipation is typically 215 milliwatts.

logic diagram (positive logic)

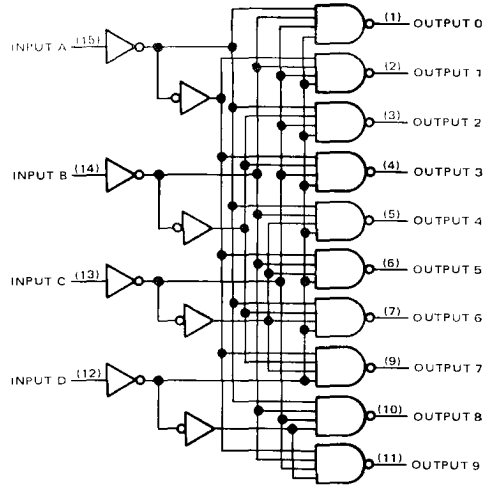

logic symbol

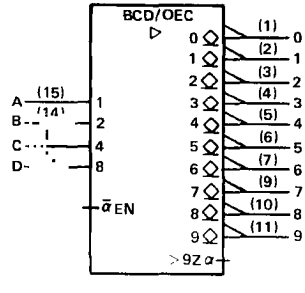

Pin numbers shown are for J, N, and W packages.

PRODUCTION DATA documents contain information current as of publication date. Products conform to specifications per the terms of Texas Instruments standard warranty. Production processing does not necessarily include testing of all parameters.

absolute maximum ratings over operating free-air temperature range (unless otherwise noted)

Supply voltage, V_{CC} (see Note 1) . . . . . 7 V
Input voltage . . . . . 5.5 V
Maximum current into any output (off-state) . . . . . 1 mA
Operating free-air temperature range: SN5445 Circuits . . . . . −55°C to 125°C
SN7445 Circuits . . . . . 0°C to 70°C
Storage temperature range . . . . . −65°C to 150°C

NOTE 1: Voltage values are with respect to network ground terminal.

recommended operating conditions

	SN5445			SN7445			UNIT
	MIN	NOM	MAX	MIN	NOM	MAX	
Supply voltage, V_{CC}	4.5	5	5.5	4.75	5	5.25	V
Off-state output voltage			30			30	V
Operating free-air temperature, T_A	−55		125	0		70	°C

electrical characteristics over recommended operating free-air temperature range (unless otherwise noted)

PARAMETER		TEST CONDITIONS†		MIN	TYP‡	MAX	UNIT
V_{IH}	High-level input voltage			2			V
V_{IL}	Low-level input voltage					0.8	V
V_{IK}	Input clamp voltage	V_{CC} = MIN, I_I = −12 mA				−1.5	V
$V_{O(on)}$	On-state output voltage	V_{CC} = MIN, V_{IH} = 2 V, V_{IL} = 0.8 V	$I_{O(on)}$ = 80 mA		0.5	0.9	V
			$I_{O(on)}$ = 20 mA			0.4	
$I_{O(off)}$	Off-state output current	V_{CC} = MIN, V_{IH} = 2 V, V_{IL} = 0.8 V, $V_{O(off)}$ = 30 V				250	μA
I_I	Input current at maximum input voltage	V_{CC} = MAX, V_I = 5.5 V				1	mA
I_{IH}	High-level input current	V_{CC} = MAX, V_I = 2.4 V				40	μA
I_{IL}	Low-level input current	V_{CC} = MAX, V_I = 0.4 V				−1.6	mA
I_{CC}	Supply current	V_{CC} = MAX, See Note 2	SN5445		43	62	mA
			SN7445		43	70	

†For conditions shown as MIN or MAX, use the appropriate value specified under recommended operating conditions for the applicable type
‡All typical values are at V_{CC} = 5 V, T_A = 25°C.
NOTE 2: I_{CC} is measured with all inputs grounded and outputs open

switching characteristics, V_{CC} = 5 V, T_A = 25°C

PARAMETER		TEST CONDITIONS	MIN	TYP	MAX	UNIT
t_{PLH}	Propagation delay time, low-to-high-level output	C_L = 15 pF, R_L = 100 Ω, See Note 3			50	ns
t_{PHL}	Propagation delay time, high-to-low-level output				50	ns

NOTE 3: Load circuits and voltage waveforms are shown in Section 1.

schematics of inputs and outputs

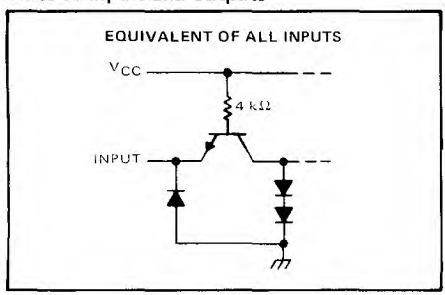

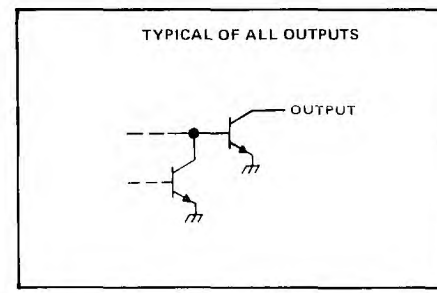

TEXAS INSTRUMENTS
POST OFFICE BOX 655012 • DALLAS, TEXAS 75265

'46A, '47A, 'LS47 feature

- Open-Collector Outputs Drive Indicators Directly
- Lamp-Test Provision
- Leading/Trailing Zero Suppression

'48, 'LS48 feature

- Internal Pull-Ups Eliminate Need for External Resistors
- Lamp-Test Provision
- Leading/Trailing Zero Suppression

'LS49 feature

- Open-Collector Outputs
- Blanking Input

SN5446A, SN5447A, SN54LS47, SN5448,
SN54LS48 . . . J PACKAGE
SN7446A, SN7447A,
SN7448 . . . N PACKAGE
SN74LS47, SN74LS48 . . . D OR N PACKAGE
(TOP VIEW)

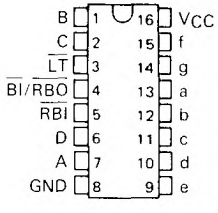

SN54LS47, SN54LS48 . . . FK PACKAGE
(TOP VIEW)

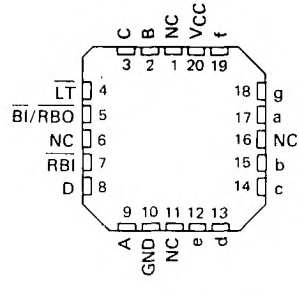

SN54LS49 . . . J OR W PACKAGE
SN74LS49 . . . D OR N PACKAGE
(TOP VIEW)

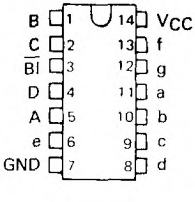

SN54LS49 . . . FK PACKAGE
(TOP VIEW)

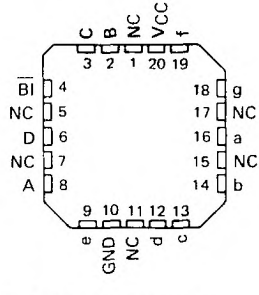

NC – No internal connection

PRODUCTION DATA documents contain information current as of publication date. Products conform to specifications per the terms of Texas Instruments standard warranty. Production processing does not necessarily include testing of all parameters.

- All Circuit Types Feature Lamp Intensity Modulation Capability

TYPE	DRIVER OUTPUTS				TYPICAL POWER DISSIPATION	PACKAGES
	ACTIVE LEVEL	OUTPUT CONFIGURATION	SINK CURRENT	MAX VOLTAGE		
SN5446A	low	open-collector	40 mA	30 V	320 mW	J, W
SN5447A	low	open-collector	40 mA	15 V	320 mW	J, W
SN5448	high	2-kΩ pull-up	6.4 mA	5.5 V	265 mW	J,W
SN54LS47	low	open-collector	12 mA	15 V	35 mW	J, W
SN54LS48	high	2-kΩ pull-up	2 mA	5.5 V	125 mW	J, W
SN54LS49	high	open-collector	4 mA	5.5 V	40 mW	J, W
SN7446A	low	open-collector	40 mA	30 V	320 mW	J, N
SN7447A	low	open-collector	40 mA	15 V	320 mW	J, N
SN7448	high	2-kΩ pull-up	6.4 mA	5.5 V	265 mW	J, N
SN74LS47	low	open-collector	24 mA	15 V	35 mW	J, N
SN74LS48	high	2-kΩ pull-up	6 mA	5.5 V	125 mW	J, N
SN74LS49	high	open-collector	8 mA	5.5 V	40 mW	J, N

logic symbols†

'46A, '47A, 'LS47

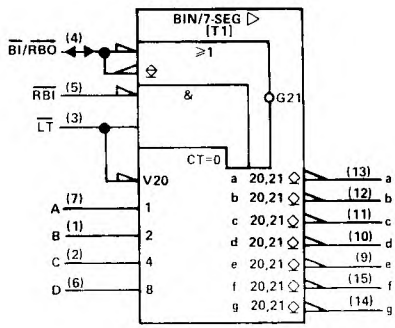

'48, 'LS48

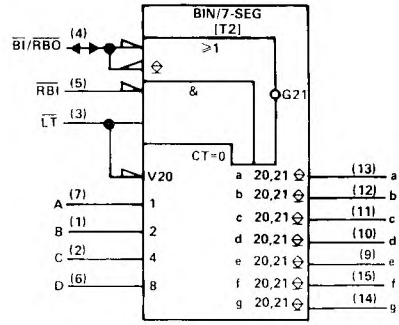

'LS49

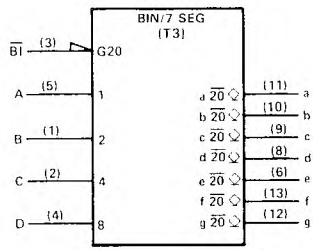

†These symbols are in accordance with ANSI/IEEE Std 91-1984 and IEC Publication 617-12.
Pin numbers shown are for D, J, N, and W packages.

TEXAS INSTRUMENTS
POST OFFICE BOX 655012 • DALLAS, TEXAS 75265

description

The '46A, '47A, and 'LS47 feature active-low outputs designed for driving common-anode LEDs or incandescent indicators directly. The '48, 'LS48, and 'LS49 feature active-high outputs for driving lamp buffers or common-cathode LEDs. All of the circuits except 'LS49 have full ripple-blanking input/output controls and a lamp test input. The 'LS49 circuit incorporates a direct blanking input. Segment identification and resultant displays are shown below. Display patterns for BCD input counts above 9 are unique symbols to authenticate input conditions.

The '46A, '47A, '48, 'LS47, and 'LS48 circuits incorporate automatic leading and/or trailing edge zero-blanking control ($\overline{RBI}$ and $\overline{RBO}$). Lamp test ($\overline{LT}$) of these types may be performed at any time when the $\overline{BI}/\overline{RBO}$ node is at a high level. All types (including the '49 and 'LS49) contain an overriding blanking input ($\overline{BI}$), which can be used to control the lamp intensity by pulsing or to inhibit the outputs. Inputs and outputs are entirely compatible for use with TTL logic outputs.

The SN54246/SN74246 and '247 and the SN54LS247/SN74LS247 and 'LS248 compose the 6 and the 9 with tails and were designed to offer the designer a choice between two indicator fonts.

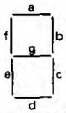

SEGMENT IDENTIFICATION

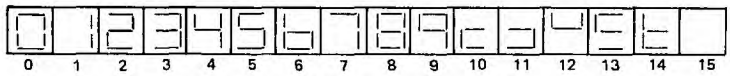

NUMERICAL DESIGNATIONS AND RESULTANT DISPLAYS

'46A, '47A, 'LS47 FUNCTION TABLE (T1)

DECIMAL OR FUNCTION	INPUTS						$\overline{BI}/\overline{RBO}$†	OUTPUTS							NOTE
	$\overline{LT}$	$\overline{RBI}$	D	C	B	A		a	b	c	d	e	f	g	
0	H	H	L	L	L	L	H	ON	ON	ON	ON	ON	ON	OFF	1
1	H	X	L	L	L	H	H	OFF	ON	ON	OFF	OFF	OFF	OFF	
2	H	X	L	L	H	L	H	ON	ON	OFF	ON	ON	OFF	ON	
3	H	X	L	L	H	H	H	ON	ON	ON	ON	OFF	OFF	ON	
4	H	X	L	H	L	L	H	OFF	ON	ON	OFF	OFF	ON	ON	
5	H	X	L	H	L	H	H	ON	OFF	ON	ON	OFF	ON	ON	
6	H	X	L	H	H	L	H	OFF	OFF	ON	ON	ON	ON	ON	
7	H	X	L	H	H	H	H	ON	ON	ON	OFF	OFF	OFF	OFF	
8	H	X	H	L	L	L	H	ON	ON	ON	ON	ON	ON	ON	
9	H	X	H	L	L	H	H	ON	ON	ON	OFF	OFF	ON	ON	
10	H	X	H	L	H	L	H	OFF	OFF	OFF	ON	ON	OFF	ON	
11	H	X	H	L	H	H	H	OFF	OFF	ON	ON	OFF	OFF	ON	
12	H	X	H	H	L	L	H	OFF	ON	OFF	OFF	OFF	ON	ON	
13	H	X	H	H	L	H	H	ON	OFF	OFF	ON	OFF	ON	ON	
14	H	X	H	H	H	L	H	OFF	OFF	OFF	ON	ON	ON	ON	
15	H	X	H	H	H	H	H	OFF	OFF	OFF	OFF	OFF	OFF	OFF	
BI	X	X	X	X	X	X	L	OFF	OFF	OFF	OFF	OFF	OFF	OFF	2
RBI	H	L	L	L	L	L	L	OFF	OFF	OFF	OFF	OFF	OFF	OFF	3
LT	L	X	X	X	X	X	H	ON	ON	ON	ON	ON	ON	ON	4

H = high level, L = low level, X = irrelevant

NOTES: 1. The blanking input ($\overline{BI}$) must be open or held at a high logic level when output functions 0 through 15 are desired. The ripple-blanking input ($\overline{RBI}$) must be open or high if blanking of a decimal zero is not desired.
2. When a low logic level is applied directly to the blanking input ($\overline{BI}$), all segment outputs are off regardless of the level of any other input.
3. When ripple-blanking input ($\overline{RBI}$) and inputs A, B, C, and D are at a low level with the lamp test input high, all segment outputs go off and the ripple-blanking output ($\overline{RBO}$) goes to a low level (response condition).
4. When the blanking input/ripple blanking output ($\overline{BI}/\overline{RBO}$) is open or held high and a low is applied to the lamp-test input, all segment outputs are on.

† $\overline{BI}/\overline{RBO}$ is wire AND logic serving as blanking input ($\overline{BI}$) and/or ripple-blanking output ($\overline{RBO}$).

'48, 'LS48
FUNCTION TABLE (T2)

DECIMAL OR FUNCTION	INPUTS						$\overline{BI}/\overline{RBO}$†	OUTPUTS							NOTE
	$\overline{LT}$	$\overline{RBI}$	D	C	B	A		a	b	c	d	e	f	g	
0	H	H	L	L	L	L	H	H	H	H	H	H	H	L	1
1	H	X	L	L	L	H	H	L	H	H	L	L	L	L	
2	H	X	L	L	H	L	H	H	H	L	H	H	L	H	
3	H	X	L	L	H	H	H	H	H	H	H	L	L	H	
4	H	X	L	H	L	L	H	L	H	H	L	L	H	H	
5	H	X	L	H	L	H	H	H	L	H	H	L	H	H	
6	H	X	L	H	H	L	H	L	L	H	H	H	H	H	
7	H	X	L	H	H	H	H	H	H	H	L	L	L	L	
8	H	X	H	L	L	L	H	H	H	H	H	H	H	H	
9	H	X	H	L	L	H	H	H	H	H	L	L	H	H	
10	H	X	H	L	H	L	H	L	L	L	H	H	L	H	
11	H	X	H	L	H	H	H	L	L	H	H	L	L	H	
12	H	X	H	H	L	L	H	L	H	L	L	L	H	H	
13	H	X	H	H	L	H	H	H	L	L	H	L	H	H	
14	H	X	H	H	H	L	H	L	L	L	H	H	H	H	
15	H	X	H	H	H	H	H	L	L	L	L	L	L	L	
BI	X	X	X	X	X	X	L	L	L	L	L	L	L	L	2
RBI	H	L	L	L	L	L	L	L	L	L	L	L	L	L	3
LT	L	X	X	X	X	X	H	H	H	H	H	H	H	H	4

H = high level, L = low level, X = irrelevant

NOTES: 1. The blanking input ($\overline{BI}$) must be open or held at a high logic level when output functions 0 through 15 are desired. The ripple-blanking input ($\overline{RBI}$) must be open or high, if blanking of a decimal zero is not desired
2. When a low logic level is applied directly to the blanking input ($\overline{BI}$), all segment outputs are low regardless of the level of any other input.
3. When ripple blanking input ($\overline{RBI}$) and s A, B, C, and D are at a low level with the lamp-test input high, all segment outputs go low and the ripple-blanking output . goes to a low level (response condition).
4. When the blanking input/ripple blanking output ($\overline{BI}/\overline{RBO}$) is open or held high and a low is applied to the lamp-test input, all segment outputs are high.

† $\overline{BI}/\overline{RBO}$ is wire-AND logic serving as blanking input ($\overline{BI}$) and/or ripple blanking output ($\overline{RBO}$).

'LS49
FUNCTION TABLE (T3)

DECIMAL OR FUNCTION	INPUTS					OUTPUTS							NOTE
	D	C	B	A	$\overline{BI}$	a	b	c	d	e	f	g	
0	L	L	L	L	H	H	H	H	H	H	H	L	1
1	L	L	L	H	H	L	H	H	L	L	L	L	
2	L	L	H	L	H	H	H	L	H	H	L	H	
3	L	L	H	H	H	H	H	H	H	L	L	H	
4	L	H	L	L	H	L	H	H	L	L	H	H	
5	L	H	L	H	H	H	L	H	H	L	H	H	
6	L	H	H	L	H	L	L	H	H	H	H	H	
7	L	H	H	H	H	H	H	H	L	L	L	L	
8	H	L	L	L	H	H	H	H	H	H	H	H	
9	H	L	L	H	H	H	H	H	L	L	H	H	
10	H	L	H	L	H	L	L	L	H	H	L	H	
11	H	L	H	H	H	L	L	H	H	L	L	H	
12	H	H	L	L	H	L	H	L	L	L	H	H	
13	H	H	L	H	H	H	L	L	H	L	H	H	
14	H	H	H	L	H	L	L	L	H	H	H	H	
15	H	H	H	H	H	L	L	L	L	L	L	L	
BI	X	X	X	X	L	L	L	L	L	L	L	L	2

H = high level, L = low level, X = irrelevant

NOTES 1 The blanking input ($\overline{BI}$) must be open or held at a high logic level when output functions 0 through 15 are desired.
2 When a low logic level is applied directly to the blanking input ($\overline{BI}$), all segment outputs are low regardless of the level of any other input

TEXAS INSTRUMENTS
POST OFFICE BOX 655012 • DALLAS, TEXAS 75265

logic diagrams (positive logic)

'46A, '47A, 'LS47

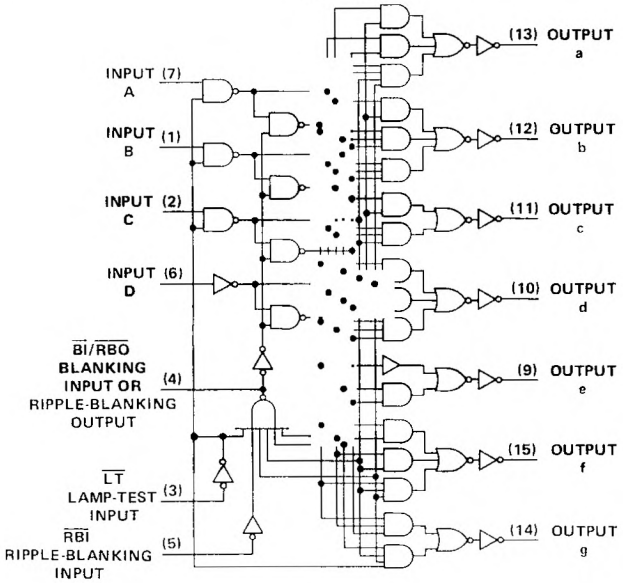

'48, 'LS48

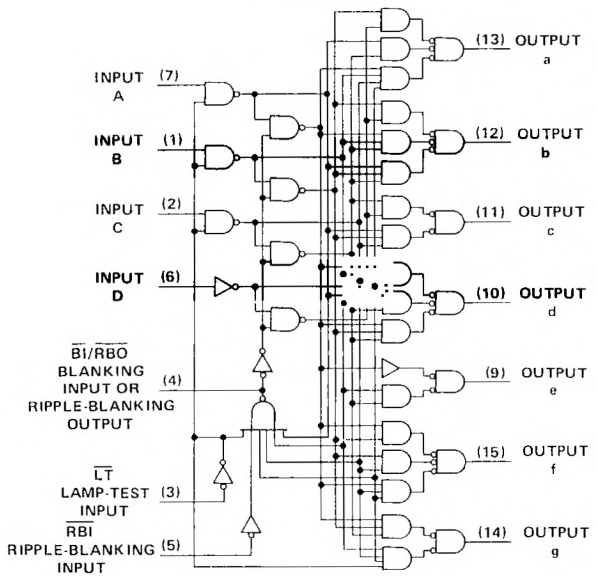

Pin numbers shown are for D, J, N, and W packages.

logic diagrams (continued)

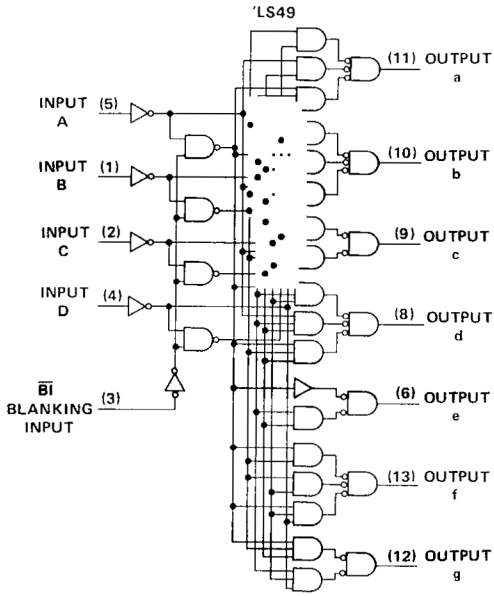

Pin numbers shown are for D, J, N, and W packages.

TEXAS INSTRUMENTS
POST OFFICE BOX 655012 • DALLAS, TEXAS 75265

schematics of inputs and outputs

'46A, '47A, '48

EQUIVALENT OF EACH INPUT EXCEPT $\overline{BI}/\overline{RBO}$

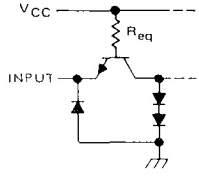

SN54'/SN74': R_{eq} = 6 kΩ NOM
SN54L'/SN74L': R_{eq} = 8 kΩ NOM

'46A, '47A, '48

EQUIVALENT OF $\overline{BI}/\overline{RBO}$

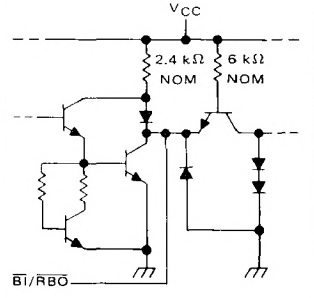

'46A, '47A

TYPICAL OF OUTPUTS
a THRU g

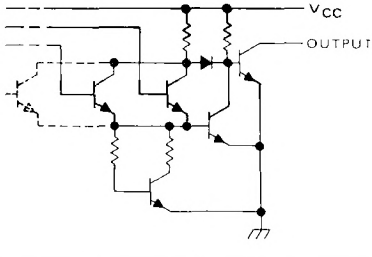

'48

TYPICAL OF OUTPUTS
a THRU g

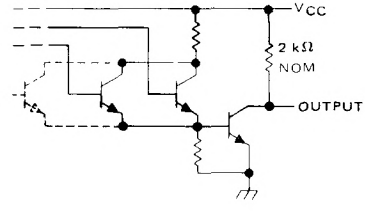

schematics of inputs and outputs

'LS47, 'LS48, 'LS49

EQUIVALENT OF EACH INPUT
EXCEPT $\overline{BI}/\overline{RBO}$

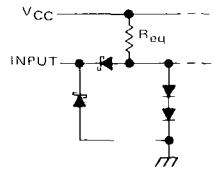

$\overline{LT}$ and $\overline{RBI}$ ('LS47, 'LS48): R_{eq} = 20 kΩ NOM
$\overline{BI}$ ('LS49): R_{eq} = 20 kΩ NOM
A, B, C, and D: R_{eq} = 25 kΩ NOM

'LS47, 'LS48, 'LS49

EQUIVALENT OF $\overline{BI}/\overline{RBO}$

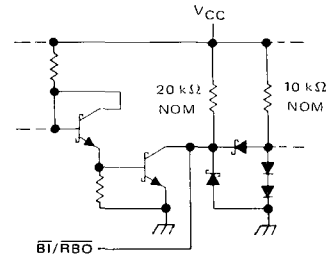

'LS47

TYPICAL OF OUTPUTS
a THRU g

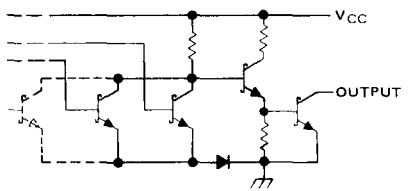

'LS48

TYPICAL OF OUTPUTS
a THRU g

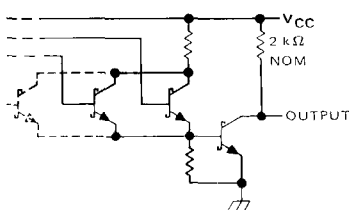

'LS49

TYPICAL OF OUTPUTS
a THRU g

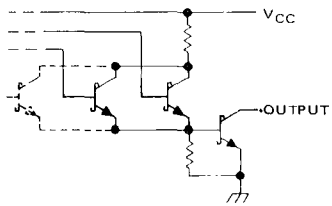

TEXAS INSTRUMENTS
POST OFFICE BOX 655012 • DALLAS, TEXAS 75265

absolute maximum ratings over operating free-air temperature range (unless otherwise noted)

Supply voltage, V_{CC} (see Note 1) . . . . . 7 V
Input voltage . . . . . 5.5 V
Current forced into any output in the off state . . . . . 1 mA
Operating free-air temperature range: SN5446A, SN5447A . . . . . −55°C to 125°C
SN7446A, SN7447A . . . . . 0°C to 70°C
Storage temperature range . . . . . −65°C to 150°C

NOTE 1: Voltage values are with respect to network ground terminal

recommended operating conditions

		SN5446A			SN5447A			SN7446A			SN7447A			UNIT
		MIN	NOM	MAX	MIN	NOM	MAX	MIN	NOM	MAX	MIN	NOM	MAX	
Supply voltage, V_{CC}		4.5	5	5.5	4.5	5	5.5	4.75	5	5.25	4.75	5	5.25	V
Off-state output voltage, $V_{O(off)}$	a thru g			30			15			30			15	V
On-state output current, $I_{O(on)}$	a thru g			40			40			40			40	mA
High-level output current, I_{OH}	$\overline{BI}/\overline{RBO}$			−200			−200			−200			−200	μA
Low-level output current, I_{OL}	$\overline{BI}/\overline{RBO}$			8			8			8			8	mA
Operating free-air temperature, T_A		−55		125	−55		125	0		70	0		70	°C

electrical characteristics over recommended operating free-air temperature range (unless otherwise noted)

PARAMETER			TEST CONDITIONS†	MIN	TYP‡	MAX	UNIT
V_{IH}	High-level input voltage			2			V
V_{IL}	Low-level input voltage					0.8	V
V_{IK}	Input clamp voltage		V_{CC} = MIN, I_I = −12 mA			−1.5	V
V_{OH}	High-level output voltage	$\overline{BI}/\overline{RBO}$	V_{CC} = MIN, V_{IH} = 2 V, V_{IL} = 0.8 V, I_{OH} = −200 μA	2.4	3.7		V
V_{OL}	Low-level output voltage	$\overline{BI}/\overline{RBO}$	V_{CC} = MIN, V_{IH} = 2 V, V_{IL} = 0.8 V, I_{OL} = 8 mA		0.27	0.4	V
$I_{O(off)}$	Off-state output current	a thru g	V_{CC} = MAX, V_{IH} = 2 V, V_{IL} = 0.8 V, $V_{O(off)}$ = MAX			250	μA
$V_{O(on)}$	On-state output voltage	a thru g	V_{CC} = MIN, V_{IH} = 2 V, V_{IL} = 0.8 V, $I_{O(on)}$ = 40 mA		0.3	0.4	V
I_I	Input current at maximum input voltage	Any input except $\overline{BI}/\overline{RBO}$	V_{CC} = MAX, V_I = 5.5 V			1	mA
I_{IH}	High-level input current	Any input except $\overline{BI}/\overline{RBO}$	V_{CC} = MAX, V_I = 2.4 V			40	μA
I_{IL}	Low-level input current	Any input $\overline{BI}/\overline{RBO}$	V_{CC} = MAX, V_I = 0.4 V			−1.6	mA
						−4	
I_{OS}	Short-circuit output current	$\overline{BI}/\overline{RBO}$	V_{CC} = MAX			−4	mA
I_{CC}	Supply current		V_{CC} = MAX, See Note 2		64	85	mA
					64	103	

† For conditions shown as MIN or MAX, use the appropriate value specified under recommended operating conditions.
‡ All typical values are at V_{CC} = 5 V, T_A = 25°C.
NOTE 2: I_{CC} is measured with all outputs open and all inputs at 4.5 V

switching characteristics, V_{CC} = 5 V, T_A = 25°C

PARAMETER		TEST CONDITIONS	MIN	TYP	MAX	UNIT
t_{off}	Turn-off time from A input	C_L = 15 pF, R_L = 120 Ω, See Note 3			100	ns
t_{on}	Turn-on time from A input				100	
t_{off}	Turn-off time from $\overline{RBI}$ input				100	ns
t_{on}	Turn-on time from $\overline{RBI}$ input				100	

NOTE 3: Load circuits and voltage waveforms are shown in Section 1.

absolute maximum ratings over operating free-air temperature range (unless otherwise noted)

Supply voltage, V_{CC} (see Note 1) . . . . . 7 V
Input voltage . . . . . 5.5 V
Operating free-air temperature range: SN5448 . . . . . −55°C to 125°C
SN7448 . . . . . 0°C to 70°C
Storage temperature range . . . . . −65°C to 150°C

NOTE 1: Voltage values are with respect to network ground terminal.

recommended operating conditions

		SN5448			SN7448			UNIT
		MIN	NOM	MAX	MIN	NOM	MAX	
Supply voltage, V_{CC}		4.5	5	5.5	4.75	5	5.25	V
High-level output current, I_{OH}	a thru g			−400			−400	μA
	$\overline{BI}/\overline{RBO}$			−200			−200	
Low-level output current, I_{OL}	a thru g			6.4			6.4	mA
	$\overline{BI}/\overline{RBO}$			8			8	
Operating free-air temperature, T_A		−55		125	0		70	°C

electrical characteristics over recommended operating free-air temperature range (unless otherwise noted)

PARAMETER			TEST CONDITIONS†		MIN	TYP‡	MAX	UNIT
V_{IH}	High-level input voltage				2			V
V_{IL}	Low-level input voltage						0.8	V
V_{IK}	Input clamp voltage		V_{CC} = MIN, I_I = −12 mA				−1.5	V
V_{OH}	High-level output voltage	a thru g	V_{CC} = MIN, V_{IH} = 2 V,		2.4	4.2		V
		$\overline{BI}/\overline{RBO}$	V_{IL} = 0.8 V, I_{OH} = MAX		2.4	3.7		
I_O	Output current	a thru g	V_{CC} = MIN, V_O = 0.85 V, Input conditions as for V_{OH}		−1.3	−2		mA
V_{OL}	Low-level output voltage		V_{CC} = MIN, V_{IH} = 2 V, V_{IL} = 0.8 V, I_{OL} = MAX			0.27	0.4	V
I_I	Input current at maximum input voltage	Any input except $\overline{BI}/\overline{RBO}$	V_{CC} = MAX, V_I = 5.5 V				1	mA
I_{IH}	High-level input current	Any input except $\overline{BI}/\overline{RBO}$	V_{CC} = MAX, V_I = 2.4 V				40	μA
I_{IL}	Low-level input current	Any input except $\overline{BI}/\overline{RBO}$	V_{CC} = MAX, V_I = 0.4 V				−1.6	mA
		$\overline{BI}$					−4	
I_{OS}	Short-circuit output current	$\overline{BI}$	V_{CC} = MAX				−4	mA
I_{CC}	Supply current		V_{CC} = MAX, See Note 2	SN5448		53	76	mA
				SN7448		53	90	

† For conditions shown as MIN or MAX, use the appropriate value specified under recommended operating conditions.
‡ All typical values are at V_{CC} = 5 V, T_A = 25°C.
NOTE 2. I_{CC} is measured with all outputs open and all inputs at 4.5 V

switching characteristics, V_{CC} = 5 V, T_A = 25°C

PARAMETER		TEST CONDITIONS	MIN	TYP	MAX	UNIT
t_{PHL}	Propagation delay time, high-to-low-level output from A input	C_L = 15 pF, R_L = 1 kΩ See Note 3			100	ns
t_{PLH}	Propagation delay time, low-to-high-level output from A input				100	
t_{PHL}	Propagation delay time, high-to-low-level output from $\overline{RBI}$ input				100	ns
t_{PLH}	Propagation delay time, low-to-high-level output from $\overline{RBI}$ input				100	

NOTE 3: Load circuits and voltage waveforms are shown in Section 1.

TEXAS INSTRUMENTS
POST OFFICE BOX 655012 • DALLAS, TEXAS 75265

absolute maximum ratings over operating free-air temperature range (unless otherwise noted)

Supply voltage, V_{CC} (see Note 1) . . . . . 7 V
Input voltage . . . . . 7 V
Peak output current ($t_w \leq 1$ ms, duty cycle $\leq 10\%$) . . . . . 200 mA
Current forced into any output in the off state . . . . . 1 mA
Operating free-air temperature range: SN54LS47 . . . . . −55°C to 125°C
SN74LS47 . . . . . 0°C to 70°C
Storage temperature range . . . . . −65°C to 150°C

NOTE 1: Voltage values are with respect to network ground terminal.

recommended operating conditions

		SN54LS47			SN74LS47			UNIT
		MIN	NOM	MAX	MIN	NOM	MAX	
Supply voltage, V_{CC}		4.5	5	5.5	4.75	5	5.25	V
Off-state output voltage, $V_{O(off)}$	a thru g			15			15	V
On-state output current, $I_{O(on)}$	a thru g			12			24	mA
High-level output current, I_{OH}	$\overline{BI}/\overline{RBO}$			−50			−50	μA
Low-level output current, I_{OL}	$\overline{BI}/\overline{RBO}$			1.6			3.2	mA
Operating free-air temperature, T_A		−55		125	0		70	°C

electrical characteristics over recommended operating free-air temperature range (unless otherwise noted)

PARAMETER			TEST CONDITIONS†		SN54LS47			SN74LS47			UNIT
					MIN	TYP‡	MAX	MIN	TYP‡	MAX	
V_{IH}	High-level input voltage				2			2			V
V_{IL}	Low-level input voltage						0.7			0.8	V
V_{IK}	Input clamp voltage		V_{CC} = MIN,	I_I = −18 mA			−1.5			−1.5	V
V_{OH}	High-level output voltage	$\overline{BI}/\overline{RBO}$	V_{CC} = MIN, V_{IL} = V_{IL} max,	V_{IH} = 2 V, I_{OH} = −50 μA	2.4	4.2		2.4	4.2		V
V_{OL}	Low-level output voltage	$\overline{BI}/\overline{RBO}$	V_{CC} = MIN, V_{IH} = 2 V, V_{IL} = V_{IL} max	I_{OL} = 1.6 mA		0.25	0.4		0.25	0.4	V
				I_{OL} = 3.2 mA					0.35	0.5	
$I_{O(off)}$	Off-state output current	a thru g	V_{CC} = MAX, V_{IL} = V_{IL} max,	V_{IH} = 2 V, $V_{O(off)}$ = 15 V			250			250	μA
$V_{O(on)}$	On-state output voltage	a thru g	V_{CC} = MIN, V_{IH} = 2 V, V_{IL} = V_{IL} max	$I_{O(on)}$ = 12 mA		0.25	0.4		0.25	0.4	V
				$I_{O(on)}$ = 24 mA					0.35	0.5	
I_I	Input current at maximum input voltage		V_{CC} = MAX,	V_I = 7 V			0.1			0.1	mA
I_{IH}	High-level input current		V_{CC} = MAX,	V_I = 2.7 V			20			20	μA
I_{IL}	Low-level input current	Any input except $\overline{BI}/\overline{RBO}$	V_{CC} = MAX,	V_I = 0.4 V			−0.4			−0.4	mA
		$\overline{BI}/\overline{RBO}$					−1.2			−1.2	
I_{OS}	Short-circuit output current	$\overline{BI}/\overline{RBO}$	V_{CC} = MAX		−0.3		−2	−0.3		−2	mA
I_{CC}	Supply current		V_{CC} = MAX,	See Note 2		7	13		7	13	mA

†For conditions shown as MIN or MAX, use the appropriate value specified under recommended operating conditions.
‡All typical values are at V_{CC} = 5 V, T_A = 25°C.
NOTE 2. I_{CC} is measured with all outputs open and all inputs at 4.5 V.

switching characteristics, V_{CC} = 5 V, T_A = 25°C

PARAMETER		TEST CONDITIONS	MIN	TYP	MAX	UNIT
t_{off}	Turn-off time from A input	C_L = 15 pF, R_L = 665 Ω, See Note 3			100	ns
t_{on}	Turn-on time from A input				[illegible]	
t_{off}	Turn-off time from $\overline{RBI}$ input, outputs (a-f) only				100	ns
t_{on}	Turn-on time from $\overline{RBI}$ input, outputs (a-f) only				100	

NOTE 3: Load circuits and voltage waveforms are shown in Section 1.

absolute maximum ratings over operating free-air temperature range (unless otherwise noted)

Supply voltage, V_{CC} (see Note 1) . . . . . 7 V
Input voltage . . . . . 7 V
Operating free-air temperature range: SN54LS48 . . . . . −55°C to 125°C
SN74LS48 . . . . . 0°C to 70°C
Storage temperature range . . . . . −65°C to 150°C

NOTE 1: Voltage values are with respect to network ground terminal.

recommended operating conditions

		SN54LS48			SN74LS48			UNIT
		MIN	NOM	MAX	MIN	NOM	MAX	
Supply voltage, V_{CC}		4.5	5	5.5	4.75	5	5.25	V
High-level output current, I_{OH}	a thru g			−100			−100	μA
	$\overline{BI}/\overline{RBO}$			−50			−50	
Low-level output current, I_{OL}	a thru g			2			6	mA
	$\overline{BI}/\overline{RBO}$			1.6			3.2	
Operating free-air temperature, T_A		−55		125	0		70	°C

electrical characteristics over recommended operating free-air temperature range (unless otherwise noted)

PARAMETER			TEST CONDITIONS†		SN54LS48 MIN	SN54LS48 TYP‡	SN54LS48 MAX	SN74LS48 MIN	SN74LS48 TYP‡	SN74LS48 MAX	UNIT
V_{IH}	High-level input voltage				2			2			V
V_{IL}	Low-level input voltage						0.7			0.8	V
V_{IK}	Input clamp voltage		V_{CC} = MIN,	I_I = −18 mA			−1.5			−1.5	V
V_{OH}	High-level output voltage	a thru g and $\overline{BI}/\overline{RBO}$	V_{CC} = MIN, V_{IL} = V_{IL} max,	V_{IH} = 2 V, I_{OH} = MAX	2.4	4.2		2.4	4.2		V
I_O	Output current	a thru g	V_{CC} = MIN, Input conditions as for V_{OH}	V_O = 0.85 V,	−1.3	−2		−1.3	−2		mA
V_{OL}	Low-level output voltage	a thru g	V_{CC} = MIN, V_{IH} = 2 V, V_{IL} = V_{IL} max	I_{OL} = 2 mA		0.25	0.4		0.25	0.4	V
				I_{OL} = 6 mA					0.35	0.5	
		$\overline{BI}/\overline{RBO}$	V_{CC} = MIN, V_{IH} = 2 V, V_{IL} = V_{IL} max	I_{OL} = 1.6 mA		0.25	0.4		0.25	0.4	V
				I_{OL} = 3.2 mA					0.35	0.5	
I_I	Input current at maximum input voltage	Any input except $\overline{BI}/\overline{RBO}$	V_{CC} = MAX,	V_I = 7 V			0.1			0.1	mA
I_{IH}	High-level input current	Any input except $\overline{BI}/\overline{RBO}$	V_{CC} = MAX,	V_I = 2.7 V			20			20	μA
I_{IL}	Low-level input current	Any input except $\overline{BI}/\overline{RBO}$	V_{CC} = MAX,	V_I = 0.4 V			−0.4			−0.4	mA
		$\overline{BI}/\overline{RBO}$					−1.2			−1.2	
I_{OS}	Short-circuit output current	$\overline{BI}/\overline{RBO}$	V_{CC} = MAX		−0.3		−2	−0.3		−2	mA
I_{CC}	Supply current		V_{CC} = MAX,	See Note 2		25	38		25	38	mA

†For conditions shown as MIN or MAX, use the appropriate value specified under recommended operating conditions.
‡All typical values are at V_{CC} = 5 V, T_A = 25°C.
NOTE 2: I_{CC} is measured with all outputs open and all inputs at 4.5 V.

switching characteristics, V_{CC} = 5 V, T_A = 25°C

PARAMETER		TEST CONDITIONS	MIN	TYP	MAX	UNIT
t_{PHL}	Propagation delay time, high-to-low-level output from A input	C_L = 15 pF, R_L = 4 kΩ, See Note 3			100	ns
t_{PLH}	Propagation delay time, low-to-high-level output from A input				100	
t_{PHL}	Propagation delay time, high-to-low-level output (a-f only) from $\overline{RBI}$ input	C_L = 15 pF, R_L = 6 kΩ, See Note 3			100	ns
t_{PLH}	Propagation delay time, low-to-high-level output (a-f only) from $\overline{RBI}$ input				100	

NOTE 3: Load circuits and voltage waveforms are shown in Section 1.

TEXAS INSTRUMENTS
POST OFFICE BOX 655012 • DALLAS, TEXAS 75265

absolute maximum ratings over operating free-air temperature range (unless otherwise noted)

Supply voltage, V_{CC} (see Note 1) . . . . . 7 V
Input voltage . . . . . 7 V
Current forced into any output in the off state . . . . . 1 mA
Operating free-air temperature range: SN54LS49 . . . . . −55°C to 125°C
SN74LS49 . . . . . 0°C to 70°C
Storage temperature range . . . . . −65°C to 150°C

NOTE 1: Voltage values are with respect to network ground terminal.

recommended operating conditions

	SN54LS49			SN74LS49			UNIT
	MIN	NOM	MAX	MIN	NOM	MAX	
Supply voltage, V_{CC}	4.5	5	5.5	4.75	5	5.25	V
High-level output voltage, V_{OH}			5.5			5.5	V
Low-level output current, I_{OL}			4			8	mA
Operating free-air temperature, T_A	−55		125	0		70	°C

electrical characteristics over recommended operating free-air temperature range (unless otherwise noted)

PARAMETER		TEST CONDITIONS†		SN54LS49			SN74LS49			UNIT
				MIN	TYP‡	MAX	MIN	TYP‡	MAX	
V_{IH}	High-level input voltage			2			2			V
V_{IL}	Low-level input voltage					0.7			0.8	V
V_{IK}	Input clamp voltage	V_{CC} = MIN,	I_I = −18 mA			−1.5			−1.5	V
I_{OH}	High-level output current	V_{CC} = MIN, V_{IL} = V_{IL} max,	V_{IH} = 2 V, V_{OH} = 5.5 V			250			250	μA
V_{OL}	Low-level output voltage	V_{CC} = MIN, V_{IH} = 2 V, V_{IL} = V_{IL} max	I_{OL} = 4 mA		0.25	0.4		0.25	0.4	V
			I_{OL} = 8 mA					0.35	0.5	
I_I	Input current at maximum input voltage	V_{CC} = MAX,	V_I = 7 V			0.1			0.1	mA
I_{IH}	High-level input current	V_{CC} = MAX,	V_I = 2.7 V			20			20	μA
I_{IL}	Low-level input current	V_{CC} = MAX,	V_I = 0.4 V			−0.4			−0.4	mA
I_{CC}	Supply current	V_{CC} = MAX,	See Note 2		8	15		8	15	mA

†For conditions shown as MIN or MAX, use the appropriate value specified under recommended operating conditions.
‡All typical values are at V_{CC} = 5 V, T_A = 25°C.
NOTE 2: I_{CC} is measured with all outputs open and all inputs at 4.5 V.

switching characteristics, V_{CC} = 5 V, T_A = 25°C

PARAMETER		TEST CONDITIONS	MIN	TYP	MAX	UNIT
t_{PHL}	Propagation delay time, high-to-low-level output from A input	C_L = 15 pF, R_L = 4 kΩ, See Note 3			100	ns
t_{PLH}	Propagation delay time, low-to-high-level output from A input				100	
t_{PHL}	Propagation delay time, high-to-low-level output (a-f only) from $\overline{RBI}$ input	C_L = 15 pF, R_L = 6 kΩ, See Note 3			100	ns
t_{PLH}	Propagation delay time, low-to-high-level output (a-f only) from $\overline{RBI}$ input				100	

NOTE 3: Load circuits and voltage waveforms are shown in Section 1.

DECEMBER -REV MARCH 1988

- **Package Options Include Plastic and Ceramic DIPs and Ceramic Flat Packages**
- **Dependable Texas Instruments Quality and Reliability**

description

These devices contain two independent 2-wide 2-input AND-OR-INVERT gates with one gate expandable. They perform the Boolean function $Y = \overline{AB + CD}$ with X and $\overline{X}$ left open.

The SN5450 is characterized for operation over the full military temperature range of −55°C to 125°C. The SN7450 is characterized for operation from 0°C to 70°C.

SN5450 . . . J PACKAGE
SN7450 . . . N PACKAGE
(TOP VIEW)

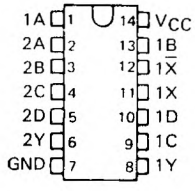

SN5450 . . . W PACKAGE
(TOP VIEW)

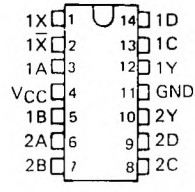

logic symbol†

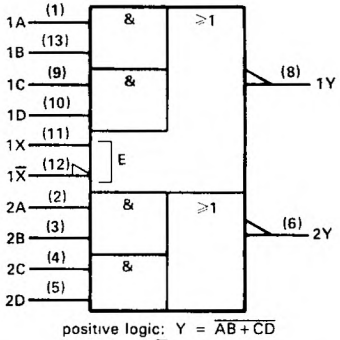

positive logic: $Y = \overline{AB + CD}$
(with X and $\overline{X}$ open)

† This symbol is in accordance with ANSI/IEEE Std 91-1984 and IEC Publication 617-12.
Pin numbers shown are for J and N packages.

logic diagram (positive logic)

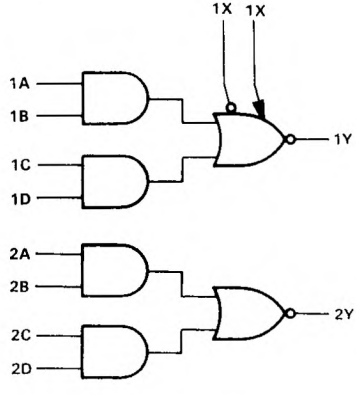

PRODUCTION DATA documents contain information current as of publication date. Products conform to specifications per the terms of Texas Instruments standard warranty. Production processing does not necessarily include testing of all parameters.

schematic (each AND-OR-INVERT gate)

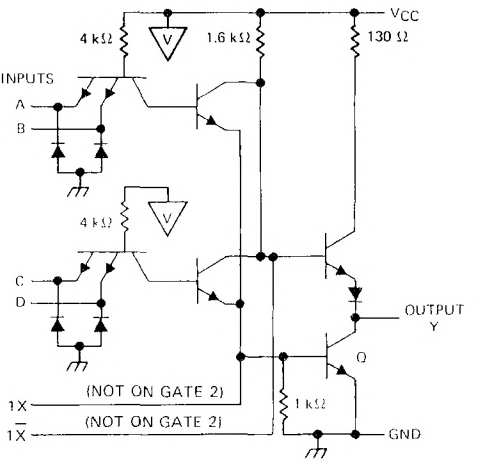

Resistor values shown are nominal.
If expander is not used, leave X and $\overline{X}$ open.

absolute maximum ratings over operating free-air temperature range (unless otherwise noted)

Supply voltage, V_{CC} (see Note 1) . . . . . 7 V
Input voltage . . . . . 5.5 V
Operating free-air temperature range: SN5450 . . . . . −55°C to 125°C
SN7450 . . . . . 0°C to 70°C
Storage temperature range . . . . . −65°C to 150°C

NOTE 1: Voltage values are with respect to network ground terminal.

TEXAS INSTRUMENTS
POST OFFICE BOX 655012 • DALLAS, TEXAS 75265

recommended operating conditions

		SN5450			SN7450			UNIT
		MIN	NOM	MAX	MIN	NOM	MAX	
V_{CC}	Supply voltage	4.5	5	5.5	4.75	5	5.25	V
V_{IH}	High-level input voltage	2			2			V
V_{IL}	Low-level input voltage			0.8			0.8	V
I_{OH}	High-level output current			−0.4			−0.4	mA
I_{OL}	Low-level output current			16			16	mA
T_A	Operating free-air temperature	−55		125	0		70	°C

electrical characteristics over recommended operating free-air temperature range (unless otherwise noted)

PARAMETER	TEST CONDITIONS†			SN5450			SN7450			UNIT
				MIN	TYP‡	MAX	MIN	TYP‡	MAX	
V_{IK}	V_{CC} = MIN,	I_I = −12 mA				−1.5			−1.5	V
V_{OH}	V_{CC} = MIN,	V_{IL} = 0.8 V,	I_{OH} = −0.4 mA	2.4	3.4		2.4	3.4		V
V_{OL}	V_{CC} = MIN,	V_{IH} = 2 V,	I_{OL} = 16 mA		0.2	0.4		0.2	0.4	V
I_I	V_{CC} = MAX,	V_I = 5.5 V				1			1	mA
I_{IH}	V_{CC} = MAX,	V_{IH} = 2.4 V				40			40	μA
I_{IL}	V_{CC} = MAX,	V_{IL} = 0.4 V				−1.6			−1.6	mA
	V_{CC} = MAX			−20		−55	−18		−55	mA
	V_{CC} = MAX,	V_I = 0 V			4	8		4	8	mA
	V_{CC} = MAX,	See Note 2			7.4	14		7.4	14	mA
$I_{\overline{X}}$¶	$V_{\overline{X}X}$ = 0.4 V,	I_{OL} = 16 mA				−2.9			−3.1	mA
$V_{BE(Q)}$¶	$I_X + I_{\overline{X}}$ = 0.41 mA,	$R_{\overline{X}X}$ = 0,	I_{OL} = 16 mA			1.1				V
	$I_X + I_{\overline{X}}$ = 0.62 mA,	$R_{\overline{X}X}$ = 0,	I_{OL} = 16 mA						1	
V_{OH}¶	I_X = 0.15 mA,	$I_{\overline{X}}$ = −0.15 mA,	I_{OH} = −0.4 mA	2.4	3.4					V
	I_X = 0.27 mA,	$I_{\overline{X}}$ = −0.27 mA,	I_{OH} = −0.4 mA				2.4	3.4		
V_{OL}¶	$I_X + I_{\overline{X}}$ = 0.3 mA,	$R_{\overline{X}X}$ = 138 Ω,	I_{OL} = 16 mA		0.2	0.4				V
	$I_X + I_{\overline{X}}$ = 0.43 mA,	$R_{\overline{X}X}$ = 130 Ω,	I_{OL} = 16 mA					0.2	0.4	

† For conditions shown as MIN or MAX, use the appropriate value specified under recommended operating conditions.
‡ All typical values are at V_{CC} = 5 V, T_A = 25°C.
§ Not more than one output should be shorted at a time.
¶ Using expander inputs, V_{CC} = MIN, T_A = MIN, except typical values.
NOTE 2: All inputs of one AND gate at 4.5 V, all others at GND.

switching characteristics, V_{CC} = 5 V, T_A = 25°C (see note 3)

PARAMETER	FROM (INPUT)	TO (OUTPUT)	TEST CONDITIONS	MIN	TYP	MAX	UNIT
t_{PLH}	Any	Y	R_L = 400 Ω, C_L = 15 pF		13	22	ns
t_{PHL}			Expander pins open		8	15	ns

NOTE 3: Load circuits and voltage waveforms are shown in Section 1.

- **Package Options Include Plastic "Small Outline" Packages, Ceramic Chip Carriers and Flat Packages, and Plastic and Ceramic DIPs**
- **Dependable Texas Instruments Quality and Reliability**

description

The '51 and 'S51 contain two independent 2-wide 2-input AND-OR-INVERT gates. They perform the Boolean function $Y = \overline{AB + CD}$.

The 'LS51 contains one 2-wide 3-input and one 2-wide 2-input AND-OR-INVERT gates. They perform the Boolean functions $1Y = \overline{(1A \cdot 1B \cdot 1C) + (1D \cdot 1E \cdot 1F)}$ and $2Y = \overline{(2A \cdot 2B) + (2C \cdot 2D)}$.

The SN5451, SN54LS51, and SN54S51 are characterized for operation over the full military temperature range of −55°C to 125°C. The SN7451, SN74LS51 and SN74S51 are characterized for operation from 0°C to 70°C.

logic diagrams

'51, 'S51

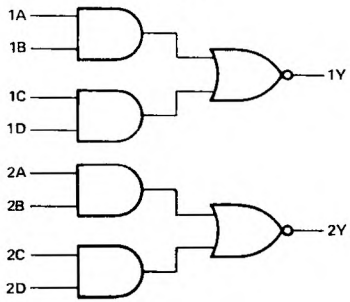

'LS51

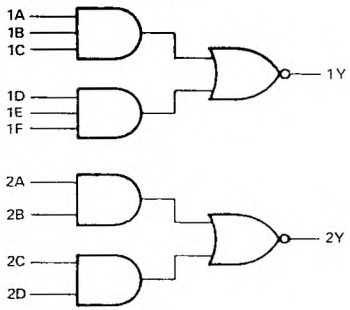

SN5451 . . . J PACKAGE
SN54S51 . . . J OR W PACKAGE
SN7451 . . . N PACKAGE
SN74S51 . . . D OR N PACKAGE
(TOP VIEW)

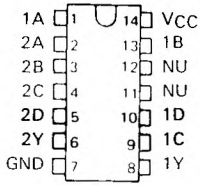

SN5451 . . . W PACKAGE
(TOP VIEW)

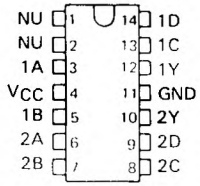

SN54LS51 . . . J OR W PACKAGE
SN74LS51 . . . D OR N PACKAGE
(TOP VIEW)

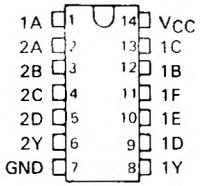

NC – No internal connection
NU – Make no external connection

2 TTL Devices

PRODUCTION DATA documents contain information current as of publication date. Products conform to specifications per the terms of Texas Instruments standard warranty. Production processing does not necessarily include testing of all parameters.

SN54S51 . . . FK PACKAGE
(TOP VIEW)

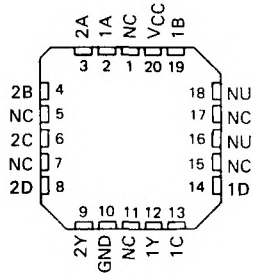

SN54LS51 . . . FK PACKAGE
(TOP VIEW)

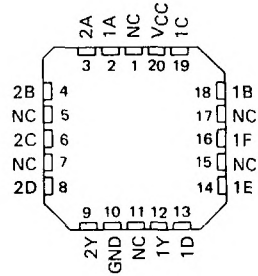

NC – No internal connection
NU – Make no external connection

2 TTL Devices

logic symbols†

'51, 'S51

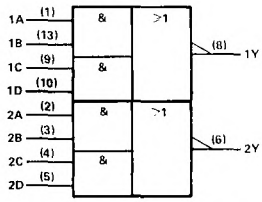

positive logic: $Y = \overline{AB + CD}$

'LS51

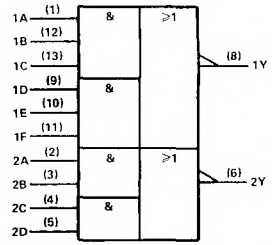

positive logic:

$1Y = \overline{(1A \cdot 1B \cdot 1C) + (1D \cdot 1E \cdot 1F)}$

$2Y = \overline{(2A \cdot 2B) + (2C \cdot 2D)}$

†These symbols are in accordance with ANSI/IEEE Std 91-1984 and IEC Publication 617-12.
Pin numbers shown are for D, J, N, and W packages.

schematics

'51

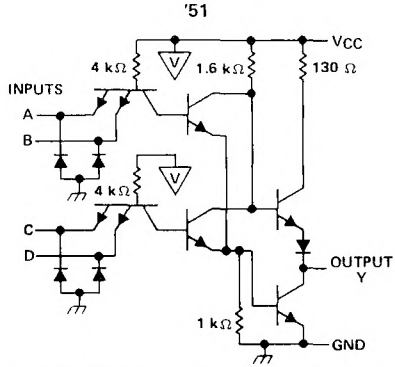

TEXAS INSTRUMENTS
POST OFFICE BOX 655012 • DALLAS, TEXAS 75265

schematics

'LS51

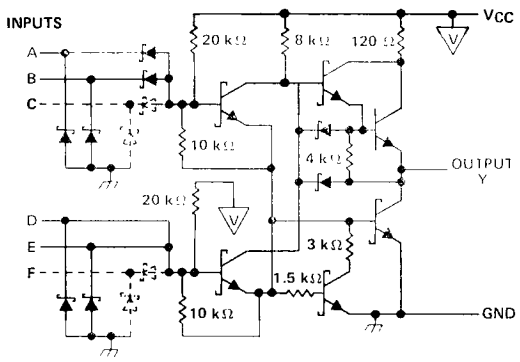

'S51

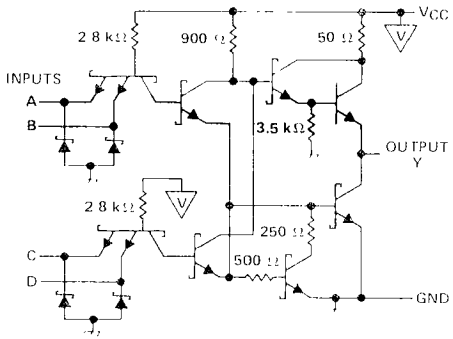

absolute maximum ratings over operating free-air temperature range (unless otherwise noted)

Supply voltage, V_{CC} (See Note 1): '51, 'LS51, 'S51 . . . . . 7 V
Input voltage: '51, 'S51 . . . . . 5.5 V
'LS51 . . . . . 7 V
Operating free-air temperature range: SN54' . . . . . −55°C to 125°C
SN74' . . . . . 0°C to 70°C
Storage temperature range . . . . . −65°C to 150°C

NOTE 1: Voltage values are with respect to network ground terminal.

recommended operating conditions

		SN5451			SN7451			UNIT
		MIN	NOM	MAX	MIN	NOM	MAX	
V_{CC}	Supply voltage	4.5	5	5.5	4.75	5	5.25	V
V_{IH}	High-level input voltage	2			2			V
V_{IL}	Low-level input voltage			0.8			0.8	V
I_{OH}	High-level output current			−0.4			−0.4	mA
I_{OL}	Low-level output current			16			16	mA
T_A	Operating free-air temperature	−55		125	0		70	°C

electrical characteristics over recommended operating free-air temperature range (unless otherwise noted)

PARAMETER	TEST CONDITIONS †			SN5451			SN7451			UNIT
				MIN	TYP‡	MAX	MIN	TYP‡	MAX	
V_{IK}	V_{CC} = MIN,	I_I = −12 mA				−1.5			−1.5	V
V_{OH}	V_{CC} = MIN,	V_{IL} = 0.8 V,	I_{OH} = −0.4 mA	2.4	3.4		2.4	3.4		V
V_{OL}	V_{CC} = MIN,	V_{IH} = 2 V,	I_{OL} = 16 mA		0.2	0.4		0.2	0.4	V
I_I	V_{CC} = MAX,	V_I = 5.5 V				1			1	mA
I_{IH}	V_{CC} = MAX,	V_I = 2.4 V				40			40	μA
I_{IL}	V_{CC} = MAX,	V_I = 0.4 V				−1.6			−1.6	mA
I_{OS}§	V_{CC} = MAX			−20		−55	−18		−55	mA
I_{CCH}	V_{CC} = MAX,	V_I = 0 V			4	8		4	8	mA
I_{CCL}	V_{CC} = MAX,	See Note 2			7.4	14		7.4	14	mA

† For conditions shown as MIN or MAX, use the appropriate value specified under recommended operating conditions.
‡ All typical values are at V_{CC} = 5 V, T_A = 25°C.
§ Not more than one output should be shorted at a time.
NOTE 2: All inputs of one AND gate at 4.5 V, all others at GND.

switching characteristics, V_{CC} = 5 V, T_A = 25°C (see note 3)

PARAMETER	FROM (INPUT)	TO (OUTPUT)	TEST CONDITIONS		MIN	TYP	MAX	UNIT
t_{PLH}	Any	Y	R_L = 400 Ω,	C_L = 15 pF		13	22	ns
t_{PHL}						8	15	

NOTE 3: Load circuits and voltage waveforms are shown in Section 1.

TEXAS INSTRUMENTS
POST OFFICE BOX 655012 • DALLAS, TEXAS 75265

recommended operating conditions

		SN54LS51			SN74LS51			UNIT
		MIN	NOM	MAX	MIN	NOM	MAX	
V_{CC}	Supply voltage	4.5	5	5.5	4.75	5	5.25	V
V_{IH}	High-level input voltage	2			2			V
V_{IL}	Low-level input voltage			0.7			0.8	V
I_{OH}	High-level output current			−0.4			−0.4	mA
I_{OL}	Low-level output current			4			8	mA
T_A	Operating free-air temperature	−55		125	0		70	°C

electrical characteristics over recommended operating free-air temperature range (unless otherwise noted)

PARAMETER	TEST CONDITIONS †			SN54LS51			SN74LS51			UNIT
				MIN	TYP‡	MAX	MIN	TYP‡	MAX	
V_{IK}	V_{CC} = MIN,	I_I = −18 mA				−1.5			−1.5	V
V_{OH}	V_{CC} = MIN,	V_{IL} = MAX,	I_{OH} = −0.4 mA	2.5	3.4		2.7	3.4		V
V_{OL}	V_{CC} = MIN,	V_{IH} = 2 V,	I_{OL} = 4 mA		0.25	0.4		0.25	0.4	V
	V_{CC} = MIN,	V_{IH} = 2 V,	I_{OL} = 8 mA					0.35	0.5	
I_I	V_{CC} = MAX,	V_I = 7 V				0.1			0.1	mA
I_{IH}	V_{CC} = MAX,	V_I = 2.7 V				20			20	μA
I_{IL}	V_{CC} = MAX,	V_I = 0.4 V				−0.4			−0.4	mA
I_{OS}§	V_{CC} = MAX			−20		−100	−20		−100	mA
I_{CCH}	V_{CC} = MAX,	V_I = 0 V			0.8	1.6		0.8	1.6	mA
I_{CCL}	V_{CC} = MAX,	See Note 2			1.4	2.8		1.4	2.8	mA

† For conditions shown as MIN or MAX, use the appropriate value specified under recommended operating conditions.
‡ All typical values are at V_{CC} = 5 V, T_A = 25°C.
§ Not more than one output should be shorted at a time, and the duration of the short-circuit should not exceed one second.
NOTE 2: All inputs of one AND gate at 4.5 V, all others at GND.

switching characteristics, V_{CC} = 5 V, T_A = 25°C (see note 3)

PARAMETER	FROM (INPUT)	TO (OUTPUT)	TEST CONDITIONS		MIN	TYP	MAX	UNIT
t_{PLH}	Any	Y	R_L = 2 kΩ,	C_L = 15 pF		12	20	ns
t_{PHL}						12.5	20	ns

NOTE 3: Load circuits and voltage waveforms are shown in Section 1.

recommended operating conditions

		SN54S51			SN74S51			UNIT
		MIN	NOM	MAX	MIN	NOM	MAX	
V_{CC}	Supply voltage	4.5	5	5.5	4.75	5	5.25	V
V_{IH}	High-level input voltage	2			2			V
V_{IL}	Low-level input voltage			0.8			0.8	V
I_{OH}	High-level output current			−1			−1	mA
I_{OL}	Low-level output current			20			20	mA
T_A	Operating free-air temperature	−55		125	0		70	°C

electrical characteristics over recommended operating free-air temperature range (unless otherwise noted)

PARAMETER	TEST CONDITIONS †				SN54S51			SN74S51			UNIT
					MIN	TYP‡	MAX	MIN	TYP‡	MAX	
V_{IK}	V_{CC} = MIN,	I_I = −18 mA					−1.2			−1.2	V
V_{OH}	V_{CC} = MIN,	V_{IL} = 0.8 V,	I_{OH} = −1 mA		2.5	3.4		2.7	3.4		V
V_{OL}	V_{CC} = MIN,	V_{IH} = 2 V,	I_{OL} = 20 mA				0.5			0.5	V
I_I	V_{CC} = MAX,	V_I = 5.5 V					1			1	mA
I_{IH}	V_{CC} = MAX,	V_I = 2.7 V					50			50	μA
I_{IL}	V_{CC} = MAX,	V_I = 0.5 V					−2			−2	mA
I_{OS}§	V_{CC} = MAX				−40		−100	−40		−100	mA
I_{CCH}	V_{CC} = MAX,	V_I = 0 V				8.2	17.8		8.2	17.8	mA
I_{CCL}	V_{CC} = MAX,	See Note 2				13.6	22		13.6	22	mA

† For conditions shown as MIN or MAX, use the appropriate value specified under recommended operating conditions.
‡ All typical values are at V_{CC} = 5 V, T_A = 25°C.
§ Not more than one output should be shorted at a time, and the duration of the short-circuit should not exceed one second.
NOTE 2: All inputs of one AND gate at 4.5 V, all others at GND.

switching characteristics, V_{CC} = 5 V, T_A = 25°C (see note 3)

PARAMETER	FROM (INPUT)	TO (OUTPUT)	TEST CONDITIONS		MIN	TYP	MAX	UNIT
t_{PLH}	Any	Y	R_L = 280 Ω,	C_L = 15 pF		3.5	5.5	ns
t_{PHL}						3.5	5.5	ns
t_{PLH}			R_L = 280 Ω,	C_L = 50 pF		5		ns
t_{PHL}						5.5		ns

NOTE 3: Load circuits and voltage waveforms are shown in Section 1.

TEXAS INSTRUMENTS
POST OFFICE BOX 655012 • DALLAS, TEXAS 75265

DECEMBER 1983—REVISED MARCH 1988

- **Package Options Include Plastic and Ceramic DIPs and Ceramic Flat Packages**
- **Dependable Texas Instruments Quality and Reliability**

description

These devices are expandable 4-wide AND-OR-INVERT gates. They perform the Boolean function $Y = \overline{AB+CD+EF+GH+X}$ with X = output of SN5460/SN7460.

The SN5453 is characterized for operation over the full military temperature range of −55°C to 125°C. The SN7453 is characterized for operation from 0°C to 70°C.

logic symbol†

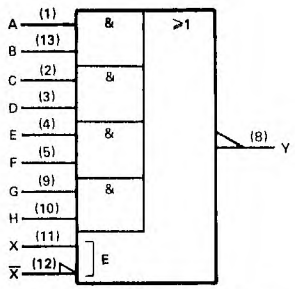

positive logic: $Y = \overline{AB+CD+EF+GH+X}$
X = output of SN5460/SN7460

†This symbol is in accordance with ANSI/IEEE Std 91-1984 and IEC Publication 617-12.
Pin numbers shown are for J and N packages.

logic diagram (positive logic)

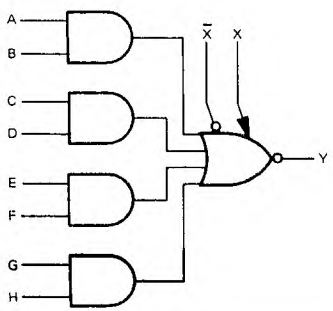

SN5453 . . . J PACKAGE
SN7453 . . . N PACKAGE
(TOP VIEW)

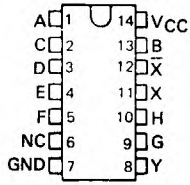

SN5453 . . . W PACKAGE
(TOP VIEW)

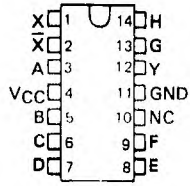

schematic

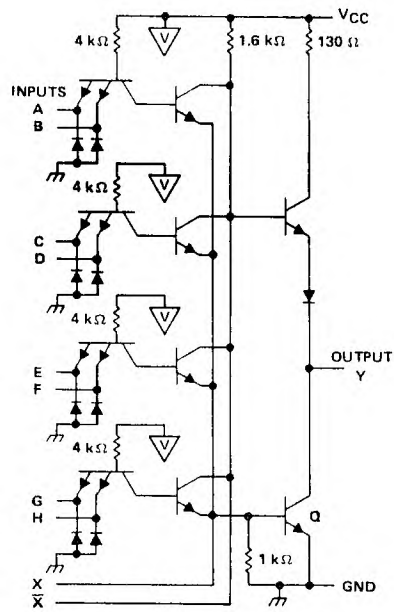

Resistor values shown are nominal.
If expander is not used, leave X and X̄ open.

PRODUCTION DATA documents contain information current as of publication date. Products conform to specifications per the terms of Texas Instruments standard warranty. Production processing does not necessarily include testing of all parameters.

absolute maximum ratings over operating free-air temperature range (unless otherwise noted)

Supply voltage, V_{CC} (see Note 1) . . . . . 7 V
Input voltage . . . . . 5.5 V
Operating free-air temperature range: SN5453 . . . . . −55°C to 125°C
SN7453 . . . . . 0°C to 70°C
Storage temperature range . . . . . −65°C to 150°C

NOTE 1: Voltage values are with respect to network ground terminals.

recommended operating conditions

		SN5453			SN7453			UNIT
		MIN	NOM	MAX	MIN	NOM	MAX	
V_{CC}	Supply voltage	4.5	5	5.5	4.75	5	5.25	V
V_{IH}	High-level input voltage	2			2			V
V_{IL}	Low-level input voltage			0.8			0.8	V
I_{OH}	High-level output current			−0.4			−0.4	mA
I_{OL}	Low-level output current			16			16	mA
T_A	Operating free-air temperature	−55		125	0		70	°C

electrical characteristics over recommended operating free-air temperature range (unless otherwise noted)

PARAMETER	TEST CONDITIONS†			SN5453			SN7453			UNIT
				MIN	TYP‡	MAX	MIN	TYP‡	MAX	
V_{IK}	V_{CC} = MIN,	I_I = −12 mA				−1.5			−1.5	V
V_{OH}	V_{CC} = MIN,	V_{IL} = 0.8 V,	I_{OH} = −0.4 mA	2.4	3.4		2.4	3.4		V
V_{OL}	V_{CC} = MIN,	V_{IH} = 2 V,	I_{OL} = 16 mA		0.2	0.4		0.2	0.4	V
I_I	V_{CC} = MAX,	V_I = 5.5 V				1			1	mA
I_{IH}	V_{CC} = MAX,	V_{IH} = 2.4 V				40			40	μA
I_{IL}	V_{CC} = MAX,	V_{IL} = 0.4 V				−1.6			−1.6	mA
I_{OS}§	V_{CC} = MAX			−20		−55	−18		−55	mA
I_{CCH}	V_{CC} = MAX,	V_I = 0 V			4	8		4	8	mA
I_{CCL}	V_{CC} = MAX,	See Note 2			5.1	9.5		5.1	9.5	mA
$I_{\overline{X}}$¶	$V_{\overline{X}X}$ = 0.4 V,	I_{OL} = 16 mA				−2.9			−3.1	mA
$V_{BE(Q)}$¶	$I_X+I_{\overline{X}}$ = 0.41 mA	$R_{\overline{X}X}$ = 0,	I_{OL} = 16 mA			1.1				V
	$I_X+I_{\overline{X}}$ = 0.62 mA,	$R_{\overline{X}X}$ = 0,	I_{OL} = 16 mA						1	
V_{OH}¶	I_X = 0.15 mA,	$I_{\overline{X}}$ = −0.15 mA,	I_{OH} = −0.4 mA	2.4	3.4					V
	I_X = 0.27 mA,	$I_{\overline{X}}$ = −0.27 mA,	I_{OH} = −0.4 mA				2.4	3.4		
V_{OL}¶	$I_X+I_{\overline{X}}$ = 0.3 mA,	$R_{\overline{X}X}$ = 138 Ω,	I_{OL} = 16 mA		0.2	0.4				V
	$I_X+I_{\overline{X}}$ = 0.43 mA,	$R_{\overline{X}X}$ = 130 Ω,	I_{OL} = 16 mA					0.2	0.4	

† For conditions shown as MIN or MAX, use the appropriate value specified under recommended operating conditions.
‡ All typical values are at V_{CC} = 5 V, T_A = 25°C.
§ Not more than one output should be shorted at a time.
¶ Using expander inputs, V_{CC} = MIN, T_A = MIN, except typical values.
NOTE 2: All inputs of one AND gate at 4.5 V, all others at GND.

switching characteristics, V_{CC} = 5 V, T_A = 25°C (see note 3)

PARAMETER	FROM (INPUT)	TO (OUTPUT)	TEST CONDITIONS	MIN	TYP	MAX	UNIT
t_{PLH}	Any	Y	R_L = 400 Ω, C_L = 15 pF #		13	22	ns
t_{PHL}					8	15	ns

Expander pins open.
NOTE 3: Load circuits and voltage waveforms are shown in Section 1.

TEXAS INSTRUMENTS
POST OFFICE BOX 655012 • DALLAS, TEXAS 75265

DECEMBER 1983 - REVISED MARCH 1988

- **Package Options Include Plastic "Small Outline" Packages, Ceramic Chip Carriers and Flat Packages, and Plastic and Ceramic DIPs**
- **Dependable Texas Instruments Quality and Reliability**

description

These devices contain 4-wide AND-OR-INVERT gates. They perform the following Boolean functions:

$$\text{'54} \quad Y = \overline{AB + CD + EF + GH}$$
$$\text{LS54} \quad Y = \overline{AB + CDE + FGH + IJ}$$

The SN5454 and SN54LS54 are characterized for operation over the full military temperature range of −55°C to 125°C. The SN7454 and SN74LS54 are characterized for operation from 0°C to 70°C.

logic diagrams (positive logic)

'54

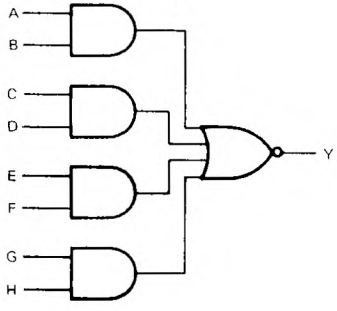

'LS54

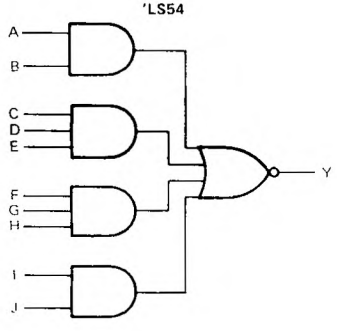

SN5454 . . . J PACKAGE
SN7454 . . . N PACKAGE
(TOP VIEW)

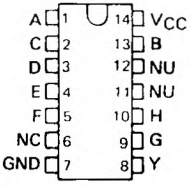

SN5454 . . . W PACKAGE
(TOP VIEW)

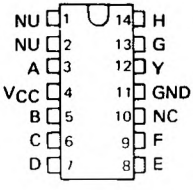

SN54LS54 . . . J OR W PACKAGE
SN74LS54 . . D OR N PACKAGE
(TOP VIEW)

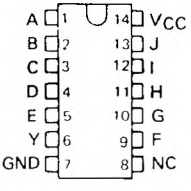

SN54LS54 . . . FK PACKAGE
(TOP VIEW)

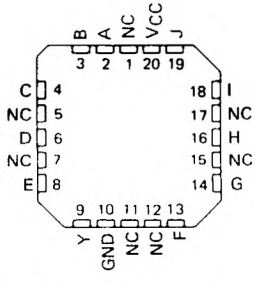

NC – No internal connection
NU – Make no external connection

PRODUCTION DATA documents contain information current as of publication date. Products conform to specifications per the terms of Texas Instruments standard warranty. Production processing does not necessarily include testing of all parameters.

logic symbols†

'54

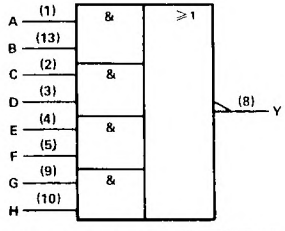

positive logic: $Y = \overline{AB + CD + EF + GH}$

'LS54

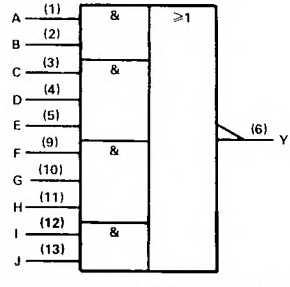

positive logic: $Y = \overline{AB + CDE + FGH + IJ}$

†These symbols are in accordance with ANSI/IEEE Std 91-1984 and IEC Publication 617-12.
Pin numbers shown are for D, J, and N package. For the SN54LS54 only, they apply also for the W package.

schematics

'54

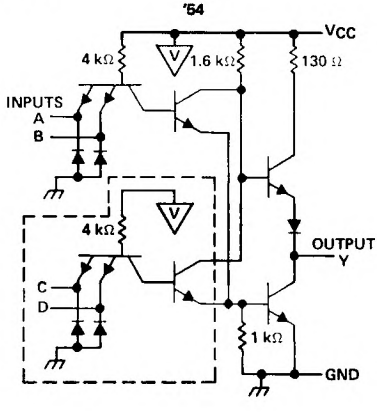

'LS54

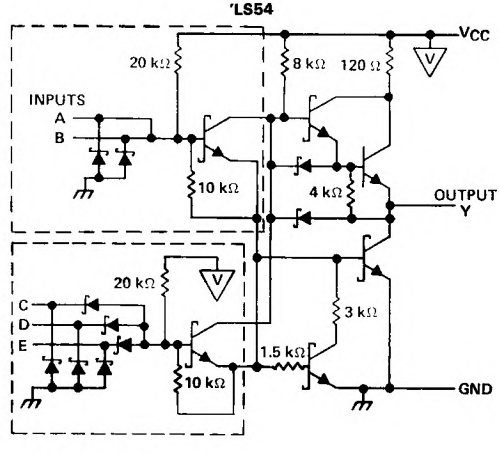

Resistor values shown are nominal.
The portion of the circuits within the dashed lines is repeated for each additional 2- or 3-input AND section, as shown in the logic diagram and logic symbols.

TEXAS INSTRUMENTS
POST OFFICE BOX 655012 • DALLAS, TEXAS 75265

absolute maximum ratings over operating free-air temperature range (unless otherwise noted)

Supply voltage, V_{CC} (see Note 1) . . . . . 7 V
Input voltage . . . . . 5.5 V
Operating free-air temperature: SN5454 . . . . . −55°C to 125°C
SN7454 . . . . . 0°C to 70°C
Storage temperature range . . . . . −65°C to 150°C

NOTE 1: Voltage values are with respect to network ground terminal.

recommended operating conditions

	SN5454			SN7454			UNIT
	MIN	NOM	MAX	MIN	NOM	MAX	
V_{CC} Supply voltage	4.5	5	5.5	4.75	5	5.25	V
V_{IH} High-level input voltage	2			2			V
V_{IL} Low-level input voltage			0.8			0.8	V
I_{OH} High-level output current			−0.4			−0.4	mA
I_{OL} Low-level output current			16			16	mA
T_A Operating free-air temperature	−55		125	0		70	°C

electrical characterics over recommended operating free-air temperature range (unless otherwise noted)

PARAMETER	TEST CONDITIONS†	SN5454			SN7454			UNIT
		MIN	TYP‡	MAX	MIN	TYP‡	MAX	
V_{IK}	V_{CC} = MIN, I_I = −12 mA			−1.5			−1.5	V
V_{OH}	V_{CC} = MIN, V_{IL} = 0.8 V, I_{OH} = −0.4 mA	2.4	3.4		2.4	3.4		V
V_{OL}	V_{CC} = MIN, V_{IH} = 2 V, I_{OL} = 16 mA		0.2	0.4		0.2	0.4	V
I_I	V_{CC} = MAX, V_I = 5.5 V			1			1	mA
I_{IH}	V_{CC} = MAX, V_I = 2.4 V			40			40	μA
I_{IL}	V_{CC} = MAX, V_I = 0.4 V			−1.6			−1.6	mA
I_{OS}§	V_{CC} = MAX	−20		−55	−18		−55	mA
I_{CCH}	V_{CC} = MAX, V_I = 0 V		4	8		4	8	mA
I_{CCL}	V_{CC} = MAX, See Note 2		5.1	9.5		5.1	9.5	mA

† For conditions shown as MIN or MAX, use the appropriate value specified under recommended operating conditions.
‡ All typical values are at V_{CC} = 5 V, T_A = 25°C.
§ Not more than one output should be shorted at a time.
NOTE 2: All inputs of one AND gate at 4.5 V, all others at GND.

switching characteristics, V_{CC} = 5 V, T_A = 25°C (see note 3)

PARAMETER	FROM (INPUT)	TO (OUTPUT)	TEST CONDITIONS	MIN	TYP	MAX	UNIT
t_{PLH}	Any	Y	R_L = 400 Ω, C_L = 15 pF		13	22	ns
t_{PHL}					8	15	ns

NOTE 3: Load circuits and voltage waveforms are shown in Section 1.

absolute maximum ratings over operating free-air temperature range (unless otherwise noted)

Supply voltage, V_{CC} (see Note 1) . . . . . 7 V
Input voltage . . . . . 7 V
Operating free-air temperature: SN54LS54 . . . . . −55°C to 125°C
SN74LS54 . . . . . 0°C to 70°C
Storage temperature range . . . . . −65°C to 150°C

NOTE 1: Voltage values are with respect to network ground terminal.

recommended operating conditions

		SN54LS54			SN74LS54			UNIT
		MIN	NOM	MAX	MIN	NOM	MAX	
V_{CC}	Supply voltage	4.5	5	5.5	4.75	5	5.25	V
V_{IH}	High-level input voltage	2			2			V
V_{IL}	Low-level input voltage			0.7			0.8	V
I_{OH}	High-level output current			−0.4			−0.4	mA
I_{OL}	Low-level output current			4			8	mA
T_A	Operating free-air temperature	−55		125	0		70	°C

electrical characteristics over recommended operating free-air temperature range (unless otherwise noted)

PARAMETER	TEST CONDITIONS†			SN54LS54			SN74LS54			UNIT
				MIN	TYP‡	MAX	MIN	TYP‡	MAX	
V_{IK}	V_{CC} = MIN,	I_I = −18 mA				−1.5			−1.5	V
V_{OH}	V_{CC} = MIN,	V_{IL} = MAX,	I_{OH} = −0.4 mA	2.5	3.4		2.7	3.4		V
V_{OL}	V_{CC} = MIN,	V_{IH} = 2 V,	I_{OL} = 4 mA		0.25	0.4		0.25	0.4	V
	V_{CC} = MIN,	V_{IH} = 2 V,	I_{OL} = 8 mA					0.35	0.5	
I_I	V_{CC} = MAX,	V_I = 7 V				0.1			0.1	mA
I_{IH}	V_{CC} = MAX,	V_I = 2.7 V				20			20	μA
I_{IL}	V_{CC} = MAX,	V_I = 0.4 V				−0.4			−0.4	mA
I_{OS}§	V_{CC} = MAX			−20		−100	−20		−100	mA
I_{CCH}	V_{CC} = MAX,	V_I = 0 V			0.8	1.6		0.8	1.6	mA
I_{CCL}	V_{CC} = MAX,	See Note 2			1	2		1	2	mA

† For conditions shown as MIN or MAX, use the appropriate value specified under recommended operating conditions.
‡ All typical values are at V_{CC} = 5 V, T_A = 25°C.
§ Not more than one output should be shorted at a time, and the duration of the short-circuit should not exceed one second.
NOTE 2: All inputs of one AND gate at 4.5 V, all others at GND.

switching characteristics, V_{CC} = 5 V, T_A = 25°C (see note 3)

PARAMETER	FROM (INPUT)	TO (OUTPUT)	TEST CONDITIONS		MIN	TYP	MAX	UNIT
t_{PLH}	Any	Y	R_L = 2 kΩ,	C_L = 15 pF		12	20	ns
t_{PHL}						12.5	20	ns

NOTE 3: Load circuits and voltage waveforms are shown in Section 1.

TEXAS INSTRUMENTS
POST OFFICE BOX 655012 • DALLAS, TEXAS 75265

DECEMBER 1983—REVISED MARCH 1988

- **Package Options Include "Small Outline" Packages, Ceramic Chip Carriers and Flat Packages, and Plastic and Ceramic DIPs**
- **Dependable Texas Instruments Quality and Reliability**

description

These devices contain 2-wide 4-input AND-OR-INVERT gates. They perform the Boolean function $Y = \overline{ABCD + EFGH}$.

The SN54LS55 is characterized for operation over the full military temperature range of −55°C to 125°C. The SN74LS55 is characterized for operation from 0°C to 70°C.

logic symbol†

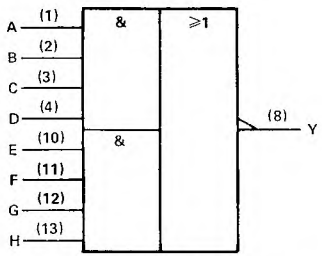

positive logic: $Y = \overline{ABCD + EFGH}$

†This symbol is in accordance with ANSI/IEEE Std. 91-1984 and IEC Publication 617-12.
Pin numbers shown are for D, J, N, and W packages.

logic diagram

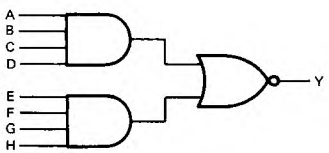

SN54LS55 . . . J OR W PACKAGE
SN74LS55 . . . D OR N PACKAGE
(TOP VIEW)

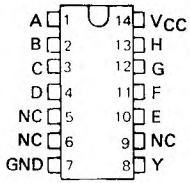

SN54LS55 . . . FK PACKAGE
(TOP VIEW)

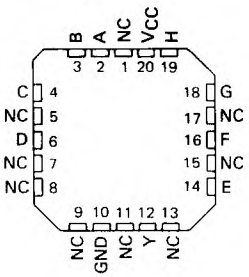

NC – No internal connection

schematic

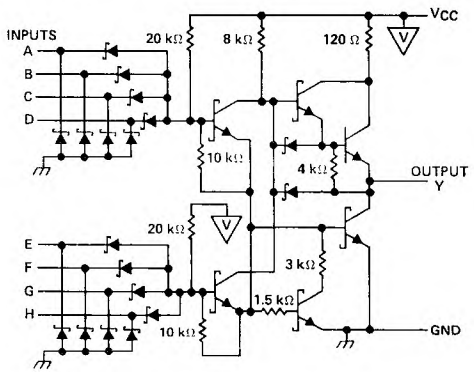

Resistor values shown are nominal.

PRODUCTION DATA documents contain information current as of publication date. Products conform to specifications per the terms of Texas Instruments standard warranty. Production processing does not necessarily include testing of all parameters.

absolute maximum ratings over operating free-air temperature range (unless otherwise noted)

Supply voltage, V_{CC} (see Note 1) . . . . . 7 V
Input voltage . . . . . 7 V
Operating free-air temperature: SN54LS55 . . . . . −55°C to 125°C
SN74LS55 . . . . . 0°C to 70°C
Storage temperature range . . . . . −65°C to 150°C

NOTE 1: Voltage values are with respect to network ground terminal.

recommended operating conditions

		SN54LS55			SN74LS55			UNIT
		MIN	NOM	MAX	MIN	NOM	MAX	
V_{CC}	Supply voltage	4.5	5	5.5	4.75	5	5.25	V
V_{IH}	High-level input voltage	2			2			V
V_{IL}	Low-level input voltage			0.7			0.8	V
I_{OH}	High-level output current			−0.4			−0.4	mA
I_{OL}	Low-level output current			4			8	mA
T_A	Operating free-air temperature	−55		125	0		70	°C

electrical characteristics over recommended operating free-air temperature range (unless otherwise noted)

PARAMETER	TEST CONDITIONS†			SN54LS55			SN74LS55			UNIT
				MIN	TYP‡	MAX	MIN	TYP‡	MAX	
V_{IK}	V_{CC} = MIN	I_I = −18 mA				−1.5			−1.5	V
V_{OH}	V_{CC} = MIN	V_{IL} = MAX,	I_{OH} = −0.4 mA	2.5	3.4		2.7	3.4		V
V_{OL}	V_{CC} = MIN	V_{IH} = 2 V,	I_{OL} = 4 mA		0.25	0.4		0.25	0.4	V
	V_{CC} = MIN	V_{IH} = 2 V,	I_{OL} = 8 mA					0.35	0.5	
I_I	V_{CC} = MAX,	V_I = 7 V				0.1			0.1	mA
I_{IH}	V_{CC} = MAX,	V_I = 2.7 V				20			20	μA
I_{IL}	V_{CC} = MAX,	V_I = 0.4 V				−0.4			−0.4	mA
I_{OS}§	V_{CC} = MAX			−20		−100	−20		−100	mA
I_{CCH}	V_{CC} = MAX,	V_I = 0 V			0.4	0.8		0.4	0.8	mA
I_{CCL}	V_{CC} = MAX,	See Note 2			0.7	1.3		0.7	1.3	mA

† For conditions shown as MIN or MAX, use the appropriate value specified under recommended operating conditions.
‡ All typical values are at V_{CC} = 5 V, T_A = 25°C.
§ Not more than one output should be shorted at a time, and the duration of the short-circuit should not exceed one second.
NOTE 2: All outputs of one AND gate at 4.5 V, all others at GND.

switching characteristics, V_{CC} = 5 V, T_A = 25°C (see note 3)

PARAMETER	FROM (INPUT)	TO (OUTPUT)	TEST CONDITIONS	MIN	TYP	MAX	UNIT
t_{PLH}	Any	Y	R_L = 2 kΩ, C_L = 15 pF		12	20	ns
t_{PHL}					12.5	20	ns

NOTE 3: Load circuits and voltage waveforms are shown in Section 1.

TEXAS INSTRUMENTS
POST OFFICE BOX 655012 • DALLAS, TEXAS 75265

DECEMBER 1983 – REVISED MARCH 1988

- **'LS56 Performs 50 to 1 Frequency Division (5 to 1, 5 to 1, and 10 to 1)**
- **'LS57 Performs 60 to 1 Frequency Division (6 to 1, 5 to 1, and 10 to 1)**
- **Available in P or JG package (two P or JG Packages Fit in a Single 16-pin Socket)**
- **Maximum Clock Frequency 25 MHz Typical**

SN54LS56, SN54LS57 . . . JG PACKAGE
SN74LS56, SN74LS57 . . . JG OR P PACKAGE

(TOP VIEW)

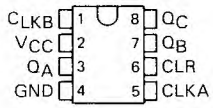

FOR CHIP CARRIER INFORMATION, CONTACT THE FACTORY.

description

These frequency dividers are particularly useful in generating one second or one hour timing pulses from 50 Hz (European standard frequency) or 60 Hz (United States standard frequency). 50 to 1 frequency division is accomplished in the 'LS56 by connecting output Q_A to input CLKB. 60 to 1 frequency division in the 'LS57 is accomplished in the same way. More universal capabilities are evidenced by the 25 MHz typical f_{max} and the almost limitless frequency division possibilities when used in cascade. Two 'LS56 packages may be interconnected to give frequency division of 2500 to 1, 625 to 1, 100 to 1, etc. Two 'LS57 packages can be connected to generate frequency divisions of 3600 to 1, 1800 to 1, 900 to 1 etc.

The 'LS56 and 'LS57 frequency dividers consist of three separate counters, A, B, and C on a single monolithic substrate. The A counter divides by 5 to 1 in the 'LS56 and by 6 to 1 in the 'LS57. The B counter divides by 5 to 1 in both devices and is internally tied to the C counter which divides by 2 to 1. The resulting C counter output is 10 to 1. Both the 'LS56 and 'LS57 feature a clear pin which is common to all three counters, A, B, and C. When the clear pin is low, the counters are enabled. When the clear is high, the counters are disabled and their outputs are set to a low-level.

All three counters, A, B, and C trigger on the high-to-low transition of the clock input. All output waveforms are symmetrical except for the 5 to 1 outputs (A and B of the 'LS56 and B of the 'LS57). See the output waveform drawings below.

input and output waveforms

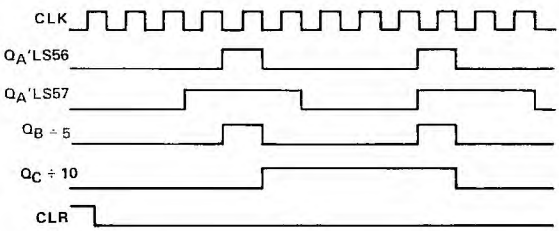

logic diagram (positive logic)

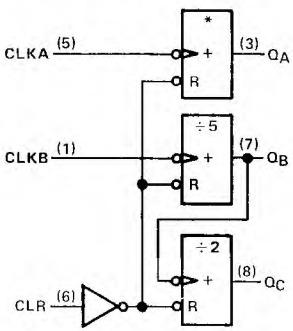

* 'LS56 ÷5
'LS57 ÷6

logic symbols†

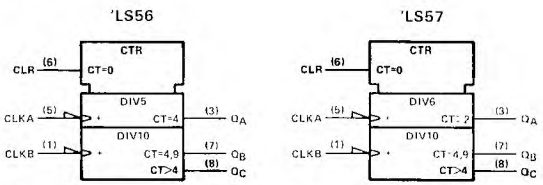

†These symbols are in accordance with ANSI/IEEE Std 91-1984 and IEC Publication 617-12.

PRODUCTION DATA documents contain information current as of publication date. Products conform to specifications per the terms of Texas Instruments standard warranty. Production processing does not necessarily include testing of all parameters.

schematics of inputs and outputs

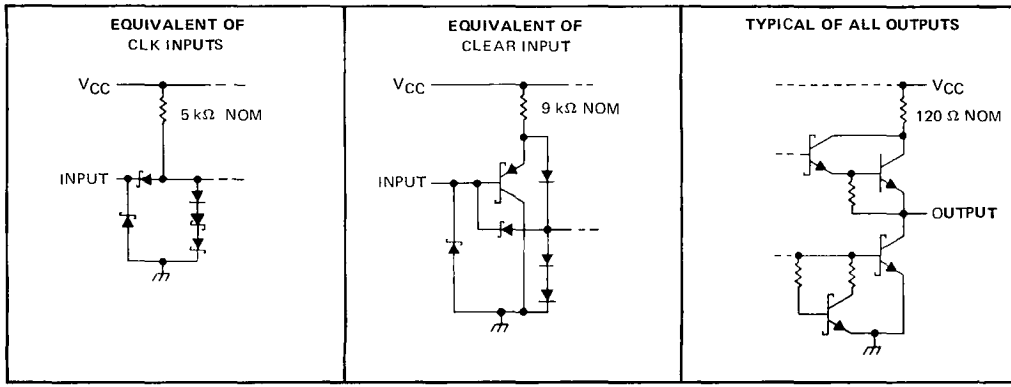

absolute maximum ratings over operating free-air temperature range (unless otherwise noted)

Supply voltage, V_{CC} (see Note 1) . . . . . 7 V
Input voltage: CLR . . . . . 7 V
CLKA, CLKB . . . . . 5.5 V
Operating free-air temperature range: SN54LS' . . . . . −55°C to 125°C
SN74LS' . . . . . 0°C to 70°C
Storage temperature range . . . . . −65°C to 150°C

NOTE 1: Voltage values are with respect to network ground terminal.

recommended operating conditions

		SN54LS'			SN74LS'			UNIT
		MIN	NOM	MAX	MIN	NOM	MAX	
V_{CC}	Supply voltage	4.5	5	5.5	4.75	5	5.25	V
V_{IH}	High-level input voltage	2			2			V
V_{IL}	Low-level input voltage			0.7			0.8	V
I_{OH}	High-level output current			−1			−1	mA
I_{OL}	Low-level output current			8			16	mA
f_{clock}	Clock frequency	0		15	0		15	MHz
t_r, t_f	Rise and fall time of clock			50			50	ns
t_w	Pulse width of clock or clear	30			30			ns
t_{su}	Clear inactive state set-up time	25			25			ns
T_A	Operating free-air temperature	−55		125	0		70	°C

TEXAS INSTRUMENTS
POST OFFICE BOX 655012 • DALLAS, TEXAS 75265

electrical characteristics over recommended operating free-air temperature range (unless otherwise noted)

PARAMETER		TEST CONDITIONS†			SN54LS'			SN74LS'			UNIT
					MIN	TYP‡	MAX	MIN	TYP‡	MAX	
V_{IK}		V_{CC} = MIN, I_I = −18 mA					−1.5			−1.5	V
V_{OH}		V_{CC} = MIN, V_{IL} = MAX	V_{IH} = 2 V,	I_{OH} = −1 mA	2.5	3.4		2.7	3.4		V
V_{OL}		V_{CC} = MIN, V_{IL} = MAX	V_{IH} = 2 V,	I_{OL} = 8 mA		0.25	0.4		0.25	0.4	V
				I_{OL} = 16 mA					0.35	0.5	
I_I	CLKA, CLKB	V_{CC} = MAX		V_I = 5.5 V			0.2			0.2	mA
	CLR			V_I = 7 V			0.1			0.1	
I_{IH}	CLKA, CLKB	V_{CC} = MAX,	V_I = 2.7 V				80			80	μA
	CLR						20			20	
I_{IL}	CLKA, CLKB	V_{CC} = MAX,	CLR = 0 V,	V_I = 0.4 V			−3.2			−3.2	mA
	CLR						−0.2			−0.2	
I_{OS}§		V_{CC} = MAX,	CLR = 0 V,	V_O = 0 V	−20		−100	−20		−100	mA
I_{CC}		V_{CC} = MAX,	See Note 2			17	30		17	30	mA

† For conditions shown as MIN or MAX, use the appropriate value specified under recommended operating conditions.
‡ All typical values are at V_{CC} = 5 V, T_A = 25°C.
§ Not more than one output should be shorted at a time and the duration of the short-circuit should not exceed one second.
NOTE 2: I_{CC} is measured by applying 4.5 V to the CLR pin with all other inputs grounded and the outputs open.

switching characteristics, V_{CC} = 5 V, T_A = 25°C (see note 3)

PARAMETER	FROM (INPUT)	TO (OUTPUT)	TEST CONDITIONS	'LS56			'LS57			UNIT
				MIN	TYP	MAX	MIN	TYP	MAX	
f_{max}	CLKA	Q_A	R_L = 1 kΩ, C_L = 30 pF	15	25		15	25		MHz
f_{max}	CLKB	Q_B, Q_C		15	25		15	25		MHz
t_{PLH}	CLKB	Q_B			8	15		8	15	ns
t_{PHL}					14	25		14	25	ns
t_{PLH}¶	CLKB	Q_C			18	30		18	30	ns
t_{PHL}¶					24	35		24	35	ns
t_{PLH}	CLKA	Q_A			12	20		14	25	ns
t_{PHL}					14	25		18	30	ns
t_{PHL}	CLR	Q_A			17	30		17	30	ns
t_{PHL}	CLR	Q_B			17	30		17	30	ns
t_{PHL}	CLR	Q_C			17	30		17	30	ns

¶ Times measured from CLKB to output Q_C are taken with output Q_B unloaded.
NOTE 3: Load circuits and voltage waveforms are shown in Section 1.

- **Package Options Include Plastic "Small Outline" Packages, Ceramic Chip Carriers and Flat Packages, and Plastic and Ceramic DIPs**
- **Dependable Texas Instruments Quality and Reliability**

description

These devices contain 4-2-3-2 input AND-OR-INVERT gates. They perform the Boolean function $Y = \overline{ABCD + EF + GHI + JK}$. The 'S64 has totem-pole outputs and the 'S65 has open-collector outputs.

The SN54S64 and the SN54S65 are characterized for operation over the full military temperature range of −55 °C to 125 °C. The SN74S64 and the SN74S65 are characterized for operation from 0 °C to 70 °C.

logic symbols†

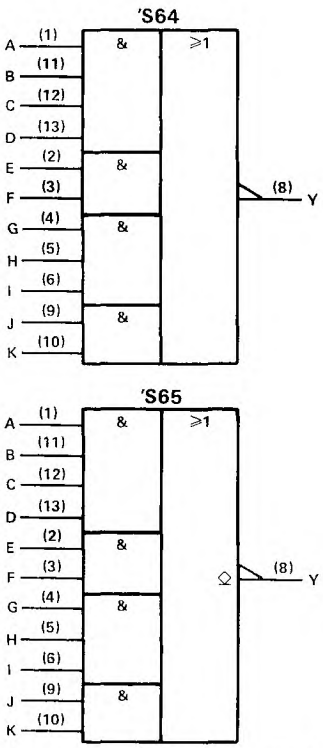

†These symbols are in accordance with ANSI/IEEE Std 91-1984 and IEC Publication 617-12.
Pin numbers shown are for D, J, N, and W packages.

SN54S64, SN54S65 . . . J OR W PACKAGE
SN74S64, SN74S65 . . . D OR N PACKAGE
(TOP VIEW)

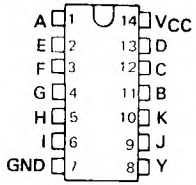

SN54S64, SN54S65 . . . FK PACKAGE
(TOP VIEW)

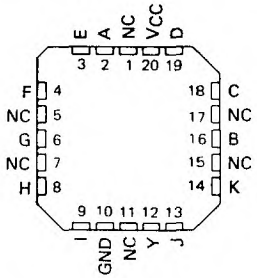

NC – No internal connection

logic diagram (each device) (positive logic)

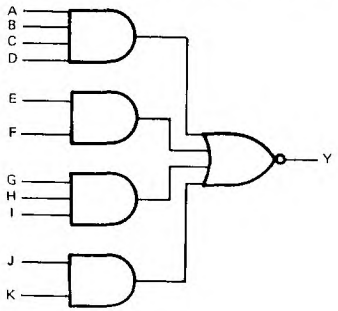

PRODUCTION DATA documents contain information current as of publication date. Products conform to specifications per the terms of Texas Instruments standard warranty. Production processing does not necessarily include testing of all parameters.

schematics (each gate)

'S64

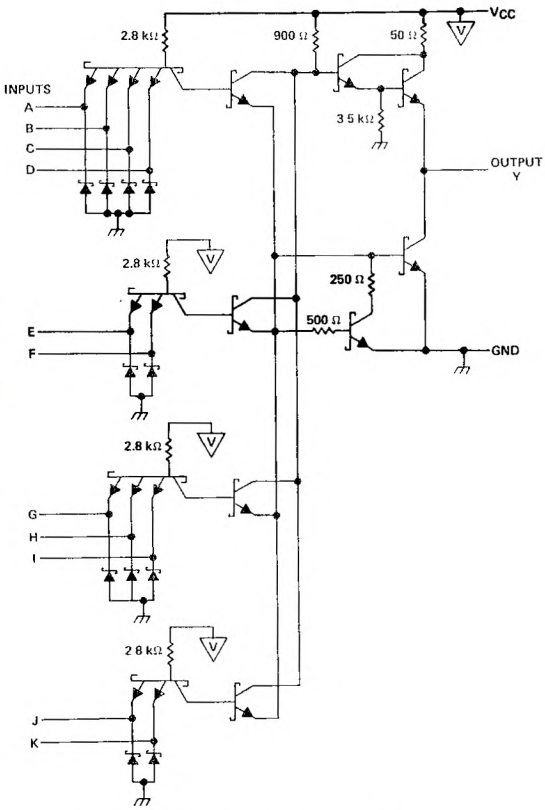

'S65

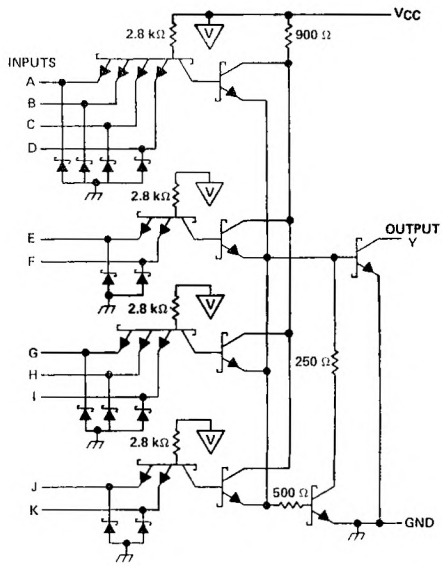

Resistor values shown are nominal and in ohms.

absolute maximum ratings over operating free-air temperature range (unless otherwise noted)

Supply voltage, V_{CC} (see Note 1) . . . . . 7 V
Input voltage . . . . . 5.5 V
Off-state output voltage, 'S65 . . . . . 7 V
Operating free-air temperature range: SN54' . . . . . −55°C to 125°C
SN74' . . . . . 0°C to 70°C
Storage temperature range . . . . . −65°C to 150°C

NOTE 1: Voltage values are with respect to network ground terminal.

TEXAS INSTRUMENTS
POST OFFICE BOX 655012 • DALLAS, TEXAS 75265

recommended operating conditions

		SN54S64			SN74S64			UNIT
		MIN	NOM	MAX	MIN	NOM	MAX	
V_{CC}	Supply voltage	4.5	5	5.5	4.75	5	5.25	V
V_{IH}	High-level input voltage	2			2			V
V_{IL}	Low-level input voltage			0.8			0.8	V
I_{OH}	High-level output current			−1			−1	mA
I_{OL}	Low-level output current			20			20	mA
T_A	Operating free-air temperature	−55		125	0		70	°C

electrical characteristics over recommended operating free-air temperature range (unless otherwise noted)

PARAMETER	TEST CONDITIONS †			SN54S64			SN74S64			UNIT
				MIN	TYP‡	MAX	MIN	TYP‡	MAX	
V_{IK}	V_{CC} = MIN,	I_I = −18 mA				−1.2			−1.2	V
V_{OH}	V_{CC} = MIN,	V_{IL} = 0.8 V,	I_{OH} = −1 mA	2.5	3.4		2.7	3.4		V
V_{OL}	V_{CC} = MIN,	V_{IH} = 2 V,	I_{OL} = 20 mA			0.5			0.5	V
I_I	V_{CC} = MAX,	V_I = 5.5 V				1			1	mA
I_{IH}	V_{CC} = MAX,	V_I = 2.7 V				50			50	μA
I_{IL}	V_{CC} = MAX,	V_I = 0.5 V				−2			−2	mA
I_{OS}§	V_{CC} = MAX			−40		−100	−40		−100	mA
I_{CCH}	V_{CC} = MAX,	V_I = 0			7	12.5		7	12.5	mA
I_{CCL}	V_{CC} = MAX,	V_I = 4.5 V			8.5	16		8.5	16	mA

† For conditions shown as MIN or MAX, use the appropriate value specified under recommended operating conditions.
‡ All typical values are at V_{CC} = 5 V, T_A = 25°C.
§ Not more than one output should be shorted at a time, and the duration of the short-circuit should not exceed one second.

switching characteristics, V_{CC} = 5 V, T_A = 25°C (see note 2)

PARAMETER	FROM (INPUT)	TO (OUTPUT)	TEST CONDITIONS		MIN	TYP	MAX	UNIT
t_{PLH}	Any	Y	R_L = 280 Ω,	C_L = 15 pF		3.5	5.5	ns
t_{PHL}						3.5	5.5	ns
t_{PLH}			R_L = 280 Ω,	C_L = 50 pF		5		ns
t_{PHL}						5.5		ns

NOTE 2: Load circuits and voltage waveforms are shown in Section 1.

recommended operating conditions

		SN54S65			SN74S65			UNIT
		MIN	NOM	MAX	MIN	NOM	MAX	
V_{CC}	Supply voltage	4.5	5	5.5	4.75	5	5.25	V
V_{IH}	High-level input voltage	2			2			V
V_{IL}	Low-level input voltage			0.8			0.8	V
V_{OH}	High-level output voltage			5.5			5.5	V
I_{OL}	Low-level output current			20			20	mA
T_A	Operating free-air temperature	−55		125	0		70	°C

electrical characteristics over recommended operating free-air temperature range (unless otherwise noted)

PARAMETER	TEST CONDITIONS†	SN54S65			SN74S65			UNIT
		MIN	TYP‡	MAX	MIN	TYP‡	MAX	
V_{IK}	V_{CC} = MIN, I_I = −18 mA			1.2			1.2	V
I_{OH}	V_{CC} = MIN, V_{IL} = 0.8 V, V_{OH} = 5.5 V						0.25	mA
	V_{CC} = MIN, V_{IL} = 0.7 V, V_{OH} = 5.5 V			0.25				
V_{OL}	V_{CC} = MIN, V_{IH} = 2 V, I_{OL} = 20 mA		0.2	0.4		0.2	0.4	V
I_I	V_{CC} = MAX, V_I = 5.5 V			1			1	mA
I_{IH}	V_{CC} = MAX, V_I = 2.7 V			50			50	μA
I_{IL}	V_{CC} = MAX, V_I = 0.5 V			−2			−2	mA
I_{CCH}	V_{CC} = MAX, V_I = 0		6	11		6	11	mA
I_{CCL}	V_{CC} = MAX, V_I = 4.5 V		8.5	16		8.5	16	mA

†For conditions shown as MIN or MAX, use the appropriate value specified under recommended operating conditions.
‡All typical values are at V_{CC} = 5 V, T_A = 25°C.

switching characteristics, V_{CC} = 5 V, T_A = 25°C (see note 2)

PARAMETER	FROM (INPUT)	TO (OUTPUT)	TEST CONDITIONS	MIN	TYP	MAX	UNIT
t_{PLH}	Any	Y	R_L = 280 Ω, C_L = 15 pF	2	5	7.5	ns
t_{PHL}				2	5.5	8.5	ns
t_{PLH}			R_L = 280 Ω, C_L = 50 pF		8		ns
t_{PHL}					6.5		ns

NOTE 2: Load circuits and voltage waveforms are shown in Section 1.

TEXAS INSTRUMENTS
POST OFFICE BOX 655012 • DALLAS, TEXAS 75265

DECEMBER 1983 – REVISED MARCH 1988

- **Heavy Duty Outputs I_{OL} Rated at 8mA/16 mA**
- **Counter One of Either 'LS68 or 'LS69 Has Individual Clicks for the A Flip-Flop**
- **Direct Clear for Each 4-Bit Counter**
- **Guaranteed Maximum Count Frequency is 50 MHz for 'LS69 and 40 MHz for 'LS68**

5N54LS68, SN54LS69 . . . J PACKAGE
SN74LS68, SN74LS69 . . . D OR N PACKAGE
(TOP VIEW)

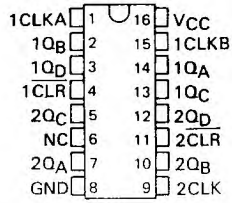

SN54LS68, SN54LS69 . . . FK PACKAGE
(TOP VIEW)

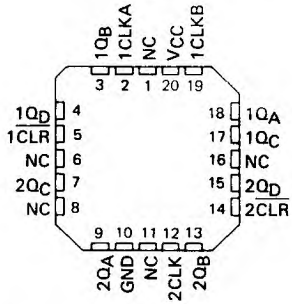

NC No internal connection

description

Each of the 'LS68 and 'LS69 circuits contain two four-bit counters. The 'LS68 is a dual decade counter, while the 'LS69 is a dual binary counter. Counter number one of both the 'LS68 and 'LS69 has two clock pins. Clock 1 is for the A flip-flop, while clock 2 is for the B, C, D flip-flops. Counter one of the 'LS68 can perform bi-quinary counting. All $1Q_A$ outputs are rated with sufficient I_{OL} to drive clock 2 while maintaining a full fan-out.

All clocks trigger on the high-to-low transition of the clock pulse. All counters have direct overriding clear pins which, when low, reset Q_A, Q_B, Q_C, and Q_D low regardless of the state of the clock.

The SN54LS68 and SN54LS69 circuits are characterized for operation over the full military temperature range of −55°C to 125°C. The SN74LS68 and SN74LS69 circuits are characterized for operation from 0°C to 70°C

logic symbols†

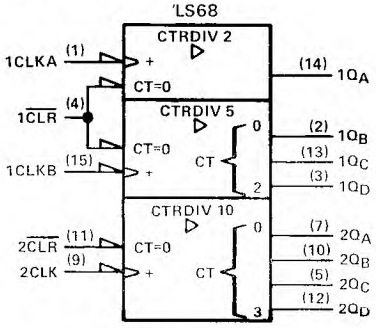

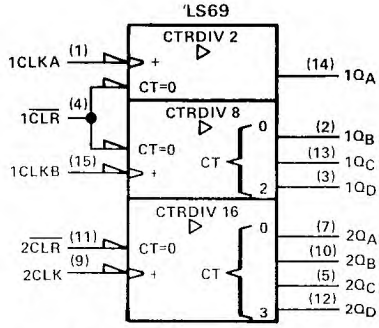

†These symbols are in accordance with ANSI/IEEE Std 91-1984 and IEC Publication 617-12.
Pin numbers shown are for D, J, and N packages.

PRODUCTION DATA documents contain information current as of publication date. Products conform to specifications per the terms of Texas Instruments standard warranty. Production processing does not necessarily include testing of all parameters.

count sequence tables

'LS68 DECADE COUNTER
BCD COUNT SEQUENCE
(See Note 1)
Applies to Counters 1 & 2

COUNT	OUTPUT			
	Q_D	Q_C	Q_B	Q_A
0	L	L	L	L
1	L	L	L	H
2	L	L	H	L
3	L	L	H	H
4	L	H	L	L
5	L	H	L	H
6	L	H	H	L
7	L	H	H	H
8	H	L	L	L
9	H	L	L	H

'LS68 DECADE COUNTER
BI-QUINARY SEQUENCE
(See Note 2)
Applies to Counter 1 only

COUNT	OUTPUT			
	Q_A	Q_D	Q_C	Q_B
0	L	L	L	L
1	L	L	L	H
2	L	L	H	L
3	L	L	H	H
4	L	H	L	L
5	H	L	L	L
6	H	L	L	H
7	H	L	H	L
8	H	L	H	H
9	H	H	L	L

'LS69 BINARY COUNTER
BCD COUNT SEQUENCE
(See Note 3)
Applies to Counters 1 & 2

COUNT	OUTPUT			
	Q_D	Q_C	Q_B	Q_A
0	L	L	L	L
1	L	L	L	H
2	L	L	H	L
3	L	L	H	H
4	L	H	L	L
5	L	H	L	H
6	L	H	H	L
7	L	H	H	H
8	H	L	L	L
9	H	L	L	H
10	H	L	H	L
11	H	L	H	H
12	H	H	L	L
13	H	H	L	H
14	H	H	H	L
15	H	H	H	H

NOTES: 1. Output $1Q_A$ is connected to 1CLK2 for BCD count.
2. Output $1Q_A$ is connected to 1CLK1 for bi-quinary count.
3. Output $1Q_A$ is connected to 1CLK2 for binary count.

schematics of inputs and outputs

EQUIVALENT OF CLOCK INPUTS

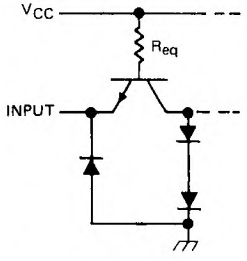

INPUT	R_{eq} NOM
1CLK1, 2CLK	4.5k Ω
1CLK2	7.5k Ω

EQUIVALENT OF $\overline{CLR}$ INPUTS

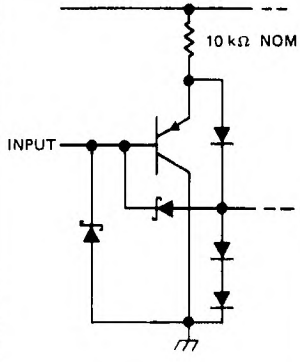

TYPICAL OF ALL OUTPUTS

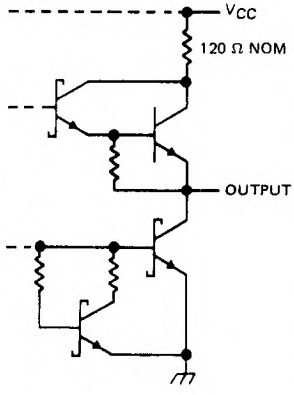

TEXAS INSTRUMENTS
POST OFFICE BOX 655012 • DALLAS, TEXAS 75265

logic diagrams (positive logic)

'LS68

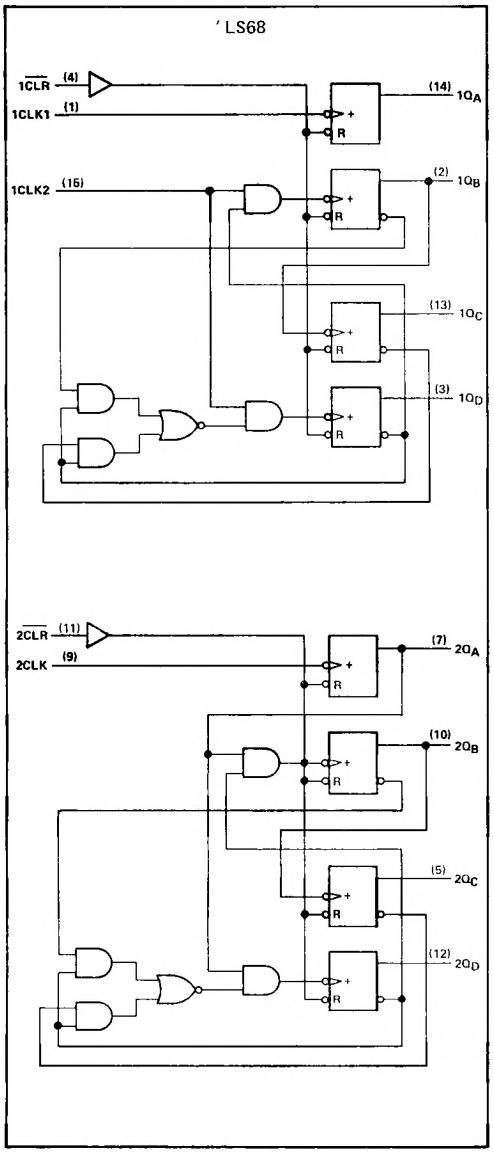

'LS69

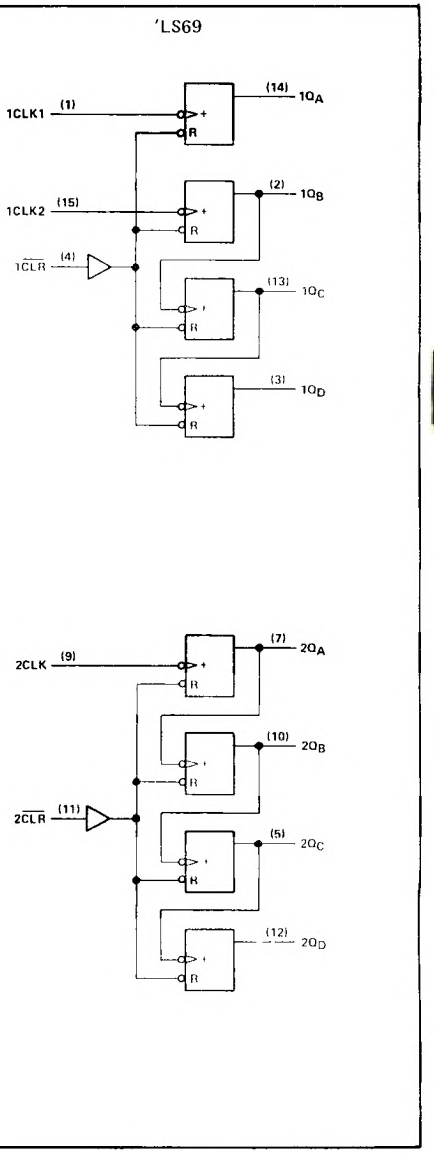

Pin numbers shown are for D, J, and N packages.

absolute maximum ratings over operating free-air temperature range (unless otherwise noted)

Supply voltage, V_{CC} (see Note 4) . . . . . 7 V
Input voltage: Clear inputs . . . . . 7 V
Clock inputs . . . . . 5.5 V
Operating free-air temperature range: SN54LS' . . . . . −55°C to 125°C
SN74LS' . . . . . 0°C to 70°C
Storage temperature range . . . . . −65°C to 150°C

NOTE 4: Voltage values are with respect to network ground terminal.

recommended operating conditions

				SN54LS'			SN74LS'			UNIT
				MIN	NOM	MAX	MIN	NOM	MAX	
V_{CC}	Supply voltage			4.5	5	5.5	4.75	5	5.25	V
V_{IH}	High-level input voltage			2			2			V
V_{IL}	Low-level input voltage					0.7			0.8	V
I_{OH}	High-level output current					−1			−1	mA
I_{OL}	Low-level output current					8			16	mA
f_{max}	Clock frequency	1CLK1		0		50	0		50	MHz
		1CLK2	'LS68	0		20	0		20	
			'LS69	0		25	0		25	
		2CLK	'LS68	0		40	0		40	
			'LS69	0		50	0		50	
t_w	Pulse width	1CLK1		10			10			ns
		1CLK2	'LS68	25			25			
			'LS69	20			20			
		2CLK	'LS68	13			13			
			'LS69	10			10			
		$\overline{\text{CLEAR}}$		15			15			
t_{su}	Clear inactive-state set-up time			25			25			ns
T_A	Operating free-air temperature			−55		125	0		70	°C

TEXAS INSTRUMENTS
POST OFFICE BOX 655012 • DALLAS, TEXAS 75265

electrical characteristics over recommended operating free-air temperature range (unless otherwise noted)

PARAMETER		TEST CONDITIONS†		SN54LS' MIN	SN54LS' TYP‡	SN54LS' MAX	SN74LS' MIN	SN74LS' TYP‡	SN74LS' MAX	UNIT
V_{IK}		V_{CC} = MIN, I_I = −18 mA				−1.5			−1.5	V
V_{OH}		V_{CC} = MIN, V_{IH} = 2 V, V_{IL} = MAX	I_{OH} = −1 mA	2.5	3.4		2.7	3.4		V
V_{OL}		V_{CC} = MIN, V_{IH} = 2 V, V_{IL} = MAX	I_{OL} = 8 mA		0.25	0.4		0.25	0.4	V
			I_{OL} = 16 mA					0.35	0.5	
I_I	CLK	V_{CC} = MAX, V_I = 5.5 V				0.1			0.1	mA
	$\overline{CLR}$	V_{CC} = MAX, V_I = 7 V				0.1			0.1	
I_{IH}	CLK	V_{CC} = MAX, V_I = 2.7 V				40			40	μA
	$\overline{CLR}$					20			20	
I_{IL}	1CLK1, 2CLK	V_{CC} = MAX, V_I = 0.4 V				−2			−2	mA
	[illegible]					−1.2			−1.2	
	[illegible]					−0.2			−0.2	
I_{OS}§		V_{CC} = MAX, V_O = 0 V		−20		−100	−20		−100	mA
I_{CC}		V_{CC} = MAX, see Note 5			36	54		36	54	mA

† For conditions shown as MIN or MAX, use the appropriate value specified under recommended operating conditions.
‡ All typical values are at V_{CC} = 5 V, T_A = 25°C.
§ Not more than one output should be shorted at a time, and duration of the short-circuit should not exceed one second.
NOTE 5: I_{CC} is measured with all inputs grounded and all outputs open.

switching characteristics, V_{CC} = 5 V, T_A = 25°C (see note 6)

PARAMETER	FROM (INPUT)	TO (OUTPUT)	TEST CONDITIONS	'LS68 MIN	'LS68 TYP	'LS68 MAX	'LS69 MIN	'LS69 TYP	'LS69 MAX	UNIT
f_{max}	1CLK1	$1Q_A$	R_L = 1 kΩ, C_L = 30 pF	50	70		50	70		MHz
f_{max}		$1Q_B$, $1Q_C$, $1Q_D$		20	30		25	35		MHz
f_{max}		$2Q_A$, $2Q_B$ $2Q_C$, $2Q_D$		40	60		50	70		MHz
t_{PLH}	1CLK1	$1Q_A$			7	11		7	11	ns
t_{PHL}					14	21		14	21	
t_{PLH}	1CLK2	$1Q_B$			8	12		7	11	ns
t_{PHL}					12	18		14	21	
t_{PLH}		$1Q_C$			15	23		16	24	
t_{PHL}					21	32		21	32	
t_{PLH}		$1Q_D$			8	12		25	38	
t_{PHL}					13	20		30	45	
t_{PLH}	2CLK	$2Q_A$			7	11		7	11	ns
t_{PHL}					14	21		14	21	
t_{PLH}		$2Q_B$			16	24		14	21	
t_{PHL}					19	29		19	29	
t_{PLH}		$2Q_C$			23	35		23	35	
t_{PHL}					27	40		27	40	
t_{PLH}		$2Q_D$			16	24		32	48	
t_{PHL}					19	29		36	54	
t_{PHL}	Any $\overline{CLR}$	Any Q			20	30		20	30	ns

NOTE 6: Load circuits and voltage waveforms are shown in Section 1.

- **Package Options Include Plastic and Ceramic DIPs and Ceramic Flat Packages**
- **Dependable Texas Instruments Quality and Reliability**

description

These monolithic, edge-triggered J-K flip-flops feature gated inputs, direct clear and preset inputs, and complementary Q and $\overline{Q}$ outputs. Input information is transferred to the outputs on the positive edge of the clock pulse.

Direct-coupled clock triggering occurs at a specific voltage level of the clock pulse, and after the clock input threshold voltage has been passed, the gated inputs are locked out.

These flip-flops are ideally suited for medium-to-high-speed applications and can result in a significant saving in system power dissipation and package count where input gating is required.

The SN5470 is characterized for operation over the full military temperature range of −55°C to 125°C. The SN7470 is characterized for operation from 0°C to 70°C.

FUNCTION TABLE

INPUTS					OUTPUTS	
$\overline{PRE}$	$\overline{CLR}$	CLK	J	K	Q	$\overline{Q}$
L	H	L	X	X	H	L
H	L	L	X	X	L	H
L	L	X	X	X	L†	L†
H	H	↑	L	L	Q_0	Q_0
H	H	↑	H	L	H	L
H	H	↑	L	H	L	H
H	H	↑	H	H	TOGGLE	
H	H	L	X	X	Q_0	Q_0

If inputs J and K are not used, they must be grounded. Preset or clear function can occur only when the clock input is low.
†This configuration is nonstable; that is, it will not persist when preset and clear inputs return to their inactive (high) level.

SN5470 . . . J PACKAGE
SN7470 . . . N PACKAGE
(TOP VIEW)

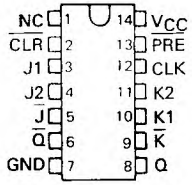

SN5470 . . . W PACKAGE
(TOP VIEW)

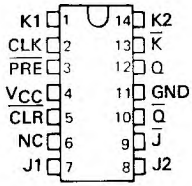

NC - No internal connection

logic symbol†

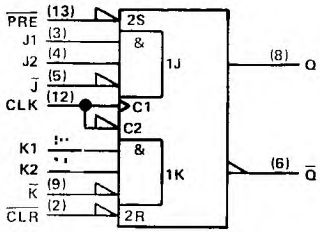

†This symbol is in accordance with ANSI/IEEE Std. 91-1984 and IEC Publication 617-12.
Pin numbers shown are for J and N packages only.

positive logic

$$J = J1 \cdot J2 \cdot \overline{J}$$
$$K = K1 \cdot K2 \cdot \overline{K}$$

PRODUCTION DATA documents contain information current as of publication date. Products conform to specifications per the terms of Texas Instruments standard warranty. Production processing does not necessarily include testing of all parameters.

logic diagram (positive logic)

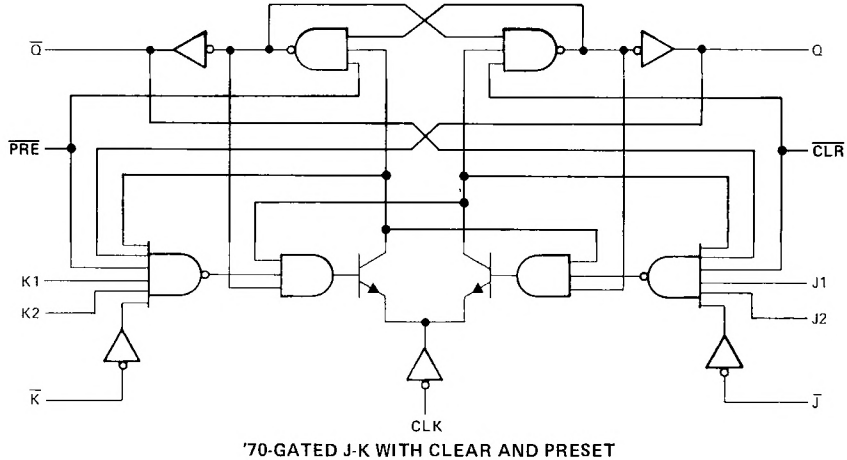

'70-GATED J-K WITH CLEAR AND PRESET

schematics of input and outputs

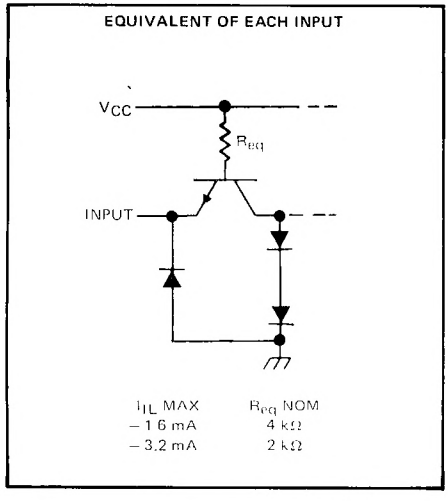

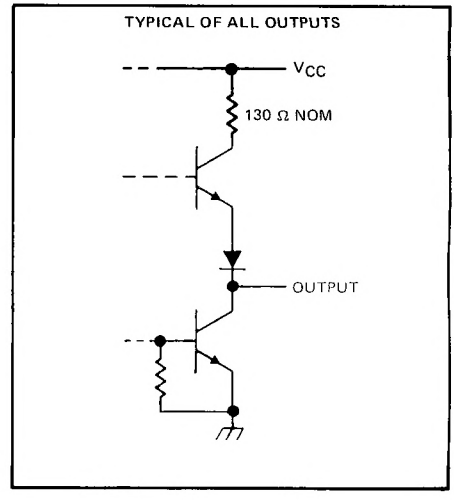

TEXAS INSTRUMENTS
POST OFFICE BOX 655012 • DALLAS, TEXAS 75265

absolute maximum ratings over operating free-air temperature range (unless otherwise noted)

Supply voltage, V_{CC} (see Note 1) . . . . . 7 V
Input voltage . . . . . 5.5 V
Operating free-air temperature: SN5470 . . . . . −55°C to 125°C
SN7470 . . . . . 0°C to 70°C
Storage temperature range . . . . . −65°C to 150°C

NOTE 1: All voltage values are with respect to network ground terminal.

recommended operating conditions

			SN5470			SN7470			UNIT
			MIN	NOM	MAX	MIN	NOM	MAX	
V_{CC}	Supply voltage		4.5	5	5.5	4.75	5	5.25	V
V_{IH}	High-level input voltage		2			2			V
V_{IL}	Low-level input voltage				0.8			0.8	V
I_{OH}	High-level output current				−0.4			−0.4	mA
I_{OL}	Low-level output current				16			16	mA
t_w	Pulse duration	CLK high	20			20			ns
		CLK low	30			30			
		PRE or CLR low	25			25			
t_{su}	Setup time before CLK↑		20			20			ns
t_h	Hold time-Data after CLK↑		5			5			ns
T_A	Operating free-air temperature		−55		125	0		70	°C

↑↓The arrow indicates the edge of the clock pulse used for reference: ↑for the rising edge, ↓ for the falling edge.

electrical characteristics over recommended operating free-air temperature range (unless otherwise noted)

PARAMETER		TEST CONDITIONS†		SN5470			SN7470			UNIT
				MIN	TYP‡	MAX	MIN	TYP‡	MAX	
V_{IK}		V_{CC} = MIN,	I_I = −12 mA			−1.5			−1.5	V
V_{OH}		V_{CC} = MIN, V_{IL} = 0.8 V,	V_{IH} = 2 V, I_{OH} = −0.4 mA	2.4	3.4		2.4	3.4		V
V_{OL}		V_{CC} = MIN, V_{IL} = 0.8 V,	V_{IH} = 2 V, I_{OL} = 16 mA		0.2	0.4		0.2	0.4	V
I_I		V_{CC} = MAX,	V_I = 5.5 V			1			1	mA
I_{IH}	PRE or CLR	V_{CC} = MAX,	V_I = 2.4 V			80			80	μA
	All other					40			40	
I_{IL}	PRE or CLR¶	V_{CC} = MAX,	V_I = 0.4 V			−3.2			−3.2	mA
	All other					−1.6			−1.6	
I_{OS}§		V_{CC} = MAX		−20		−57	−18		−57	mA
I_{CC}		V_{CC} = MAX,	See Note 2		13	26		13	26	mA

†For conditions shown as MIN or MAX, use the appropriate value specified under recommended operating conditions.
‡All typical values are at V_{CC} = 5 V, T_A = 25°C.
§Not more than one output should be shorted at a time.
¶Clear is tested with preset high and preset is tested with clear high.
NOTE 2: With all outputs open, I_{CC} is measured with the Q and $\overline{Q}$ outputs high in turn. At the time of measurement, the clock input is at 4.5 V.

switching characteristics, V_{CC} = 5 V, T_A = 25°C (see note 3)

PARAMETER†	FROM (INPUT)	TO (OUTPUT)	TEST CONDITIONS	MIN	TYP	MAX	UNIT
f_{max}			R_L = 400 Ω, C_L = 15 pF	20	35		MHz
t_{PLH}	$\overline{PRE}$ or $\overline{CLR}$	Q or $\overline{Q}$				50	ns
t_{PHL}						50	ns
t_{PLH}	CLK	Q or $\overline{Q}$			27	50	ns
t_{PHL}					18	50	ns

†f_{max} = maximum clock frequency; t_{PLH} = propagation delay time, low-to-high level output; t_{PHL} = propagation delay time, high-to-low level output.
NOTE 3: Load circuits and voltage waveforms are shown in Section 1.

TEXAS INSTRUMENTS
POST OFFICE BOX 655012 • DALLAS, TEXAS 75265

AND-GATED J-K MASTER-SLAVE FLIP-FLOPS WITH PRESET AND CLEAR

DECEMBER 1983 – REVISED MARCH 1988

- **Package Options Include Plastic and Ceramic DIPs and Ceramic Flat Packages**
- **Dependable Texas Instruments Quality and Reliability**

description

These J-K flip-flops are based on the master-slave principle and each has AND gate inputs for entry into the master section which are controlled by the clock pulse. The clock pulse also regulates the state of the coupling transistors which connect the master and slave sections. The sequence of operation is as follows:

1. Isolate slave from master
2. Enter information from AND gate inputs to master
3. Disable AND gate inputs
4. Transfer information from master to slave

The logical states of the J and K inputs must not be allowed to change when the clock pulse is in a high state.

The SN5472, and the SN54H72 are characterized for operation over the full military temperature range of −55°C to 125°C. The SN7472 is characterized for operation from 0°C to 70°C.

FUNCTION TABLE

INPUTS					OUTPUTS	
$\overline{PRE}$	$\overline{CLR}$	CLK	J	K	Q	$\overline{Q}$
L	H	X	X	X	H	L
H	L	X	X	X	L	H
L	L	X	X	X	H†	H†
H	H	⊓	L	L	Q_0	$\overline{Q}_0$
H	H	⊓	H	L	H	L
H	H	⊓	L	H	L	H
H	H	⊓	H	H	TOGGLE	

† This configuration is nonstable; that is, it will not persist when either preset or clear returns to its inactive (high) level.

SN5472 . . . J PACKAGE
SN7472 . . . N PACKAGE
(TOP VIEW)

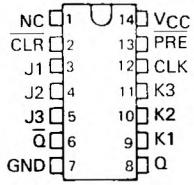

SN5472 . . . W PACKAGE
(TOP VIEW)

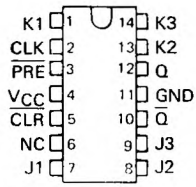

NC – No internal connection

logic symbol‡

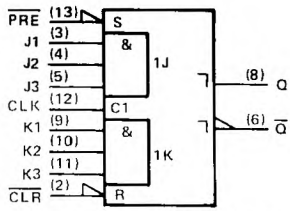

‡ This symbol is in accordance with ANSI/IEEE Std. 91-1984 and IEC Publication 617-12.
Pin numbers shown are for J and N packages.

positive logic

$$J = J1 \cdot J2 \cdot J3$$
$$K = K1 \cdot K2 \cdot K3$$

2 TTL Devices

PRODUCTION DATA documents contain information current as of publication date. Products conform to specifications per the terms of Texas Instruments standard warranty. Production processing does not necessarily include testing of all parameters.

logic diagram (positive logic)

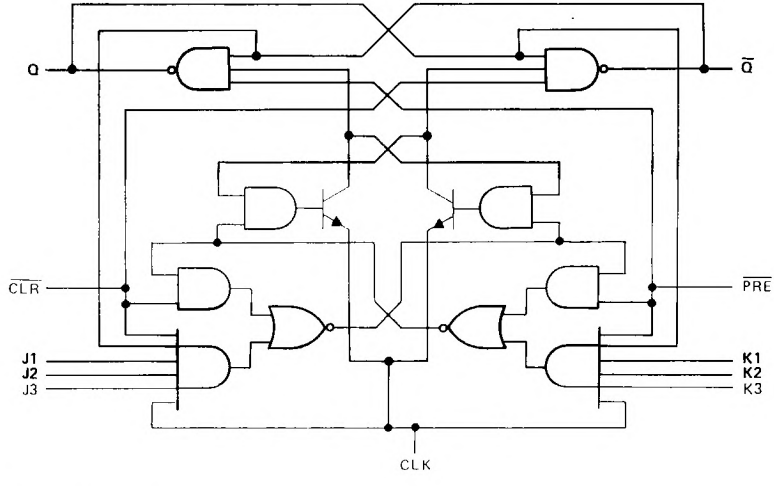

schematics of inputs and outputs

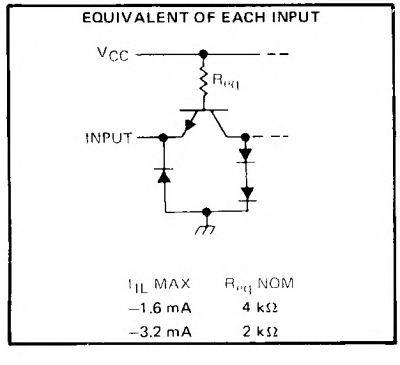

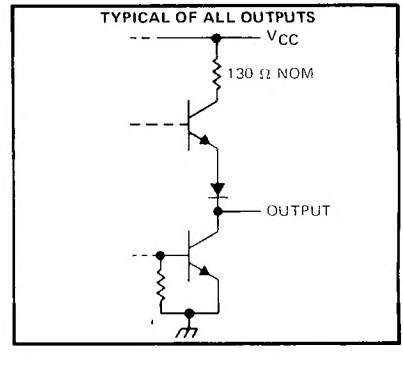

absolute maximum ratings over operating free-air temperature range (unless otherwise noted)

Supply voltage, V_{CC} (see Note 1) . . . . . 7 V
Input voltage . . . . . 5.5 V
Operating free-air temperature: SN54′ . . . . . −55°C to 125°C
SN74′ . . . . . 0°C to 70°C
Storage temperature range . . . . . −65°C to 150°C

NOTE 1: Voltage values are with respect to network ground terminal.

recommended operating conditions

			SN5472			SN7472			UNIT
			MIN	NOM	MAX	MIN	NOM	MAX	
V_{CC}	Supply voltage		4.5	5	5.5	4.75	5	5.25	V
V_{IH}	High-level input voltage		2			2			V
V_{IL}	Low-level input voltage				0.8			0.8	V
I_{OH}	High-level output current				−0.4			−0.4	mA
I_{OL}	Low-level output current				16			16	mA
t_w	Pulse duration	CLK high	20			20			ns
		CLK low	47			47			
		$\overline{PRE}$ or $\overline{CLR}$	25			25			
t_{su}	Input setup time before CLK↑		0			0			ns
t_h	Input hold time-data after CLK↓		0			0			ns
T_A	Operating free-air temperature		−55		125	0		70	°C

electrical characteristics over recommended operating free-air temperature range (unless otherwise noted)

PARAMETER		TEST CONDITIONS †	SN5472			SN7472			UNIT
			MIN	TYP‡	MAX	MIN	TYP‡	MAX	
V_{IK}		V_{CC} = MIN, I_I = −12 mA			−1.5			−1.5	V
V_{OH}		V_{CC} = MIN, V_{IH} = 2 V, V_{IL} = 0.8 V, I_{OH} = −0.4 mA	2.4	3.4		2.4	3.4		V
V_{OL}		V_{CC} = MIN, V_{IH} = 2 V, V_{IL} = 0.8 V, I_{OL} = 16 mA		0.2	0.4		0.2	0.4	V
I_I		V_{CC} = MAX, V_I = 5.5 V			1			1	mA
I_{IH}	J or K	V_{CC} = MAX, V_I = 2.4 V			40			40	μA
	All other				80			80	
I_{IL}	J or K	V_{CC} = MAX, V_I = 0.4 V			−1.6			−1.6	mA
	All other				−3.2			−3.2	
I_{OS}§		V_{CC} = MAX	−20		−57	−18		−57	mA
I_{CC}		V_{CC} = MAX, See Note 2		10	20		10	20	mA

† For conditions shown as MIN or MAX, use the appropriate value specified under recommended operating conditions.
‡ All typical values are at V_{CC} = 5 V, T_A = 25°C.
§ Not more than one output should be shorted at a time.
NOTE 2: With all outputs open, I_{CC} is measured with the Q and $\overline{Q}$ outputs high in turn. At the time of measurement, the clock input is grounded

switching characteristics, V_{CC} = 5 V, T_A = 25°C (see note 3)

PARAMETER	FROM (INPUT)	TO (OUTPUT)	TEST CONDITIONS	MIN	TYP	MAX	UNIT
f_{max}			R_L = 400 Ω, C_L = 15 pF	15	20		MHz
t_{PLH}	$\overline{PRE}$ or $\overline{CLR}$	Q or $\overline{Q}$			16	25	ns
t_{PHL}					25	40	ns
t_{PLH}	CLK	Q or $\overline{Q}$			16	25	ns
t_{PHL}					25	40	ns

NOTE 3: Load circuits and voltage waveforms are shown in Section 1

DECEMBER 1983 – REVISED MARCH 1988

- **Package Options Include Plastic "Small Outline" Packages, Flat Packages, and Plastic and Ceramic DIPs**
- **Dependable Texas Instruments Quality and Reliability**

description

The '73, and 'H73, contain two independent J-K flip-flops with individual J-K, clock, and direct clear inputs. The '73, and 'H73, are positive pulse-triggered flip-flops. J-K input is loaded into the master while the clock is high and transferred to the slave on the high-to-low transition. For these devices the J and K inputs must be stable while the clock is high.

The 'LS73A contains two independent negative-edge-triggered flip-flops. The J and K inputs must be stable one setup time prior to the high-to-low clock transition for predictable operation. When the clear is low, it overrides the clock and data inputs forcing the Q output low and the $\overline{Q}$ output high.

The SN5473, SN54H73, and the SN54LS73A are characterized for operation over the full military temperature range of −55°C to 125°C. The SN7473, and the SN74LS73A are characterized for operation from 0°C to 70°C.

SN5473, SN54LS73A . . . J OR W PACKAGE
SN7473 . . . N PACKAGE
SN74LS73A . . . D OR N PACKAGE
(TOP VIEW)

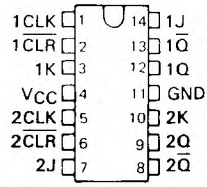

'73
FUNCTION TABLE

INPUTS				OUTPUTS	
$\overline{CLR}$	CLK	J	K	Q	$\overline{Q}$
L	X	X	X	L	H
H	↓	L	L	Q_0	$\overline{Q}_0$
H	↓	H	L	H	L
H	↓	L	H	L	H
H	↓	H	H	TOGGLE	

'LS73A
FUNCTION TABLE

INPUTS				OUTPUTS	
$\overline{CLR}$	CLK	J	K	Q	$\overline{Q}$
L	X	X	X	L	H
H	↓	L	L	Q_0	$\overline{Q}_0$
H	↓	H	L	H	L
H	↓	L	H	L	H
H	↓	H	H	TOGGLE	
H	H	X	X	Q_0	$\overline{Q}_0$

FOR CHIP CARRIER INFORMATION, CONTACT THE FACTORY

PRODUCTION DATA documents contain information current as of publication date. Products conform to specifications per the terms of Texas Instruments standard warranty. Production processing does not necessarily include testing of all parameters.

logic symbols†

'73

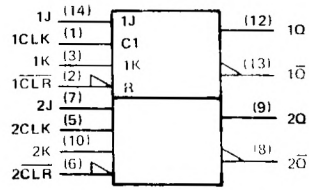

'LS73A

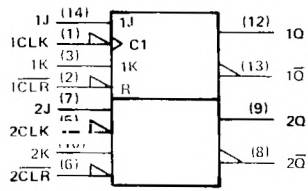

†These symbols are in accordance with ANSI/IEEE Std 91-1984 and IEC Publication 617-12

schematics of inputs and outputs

'73

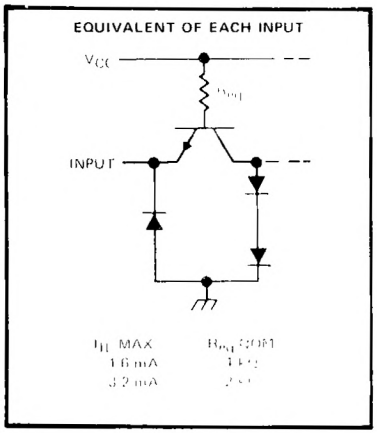

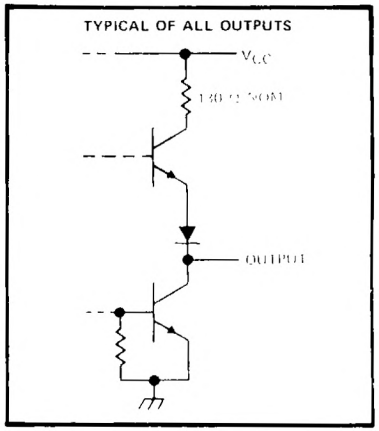

'LS73

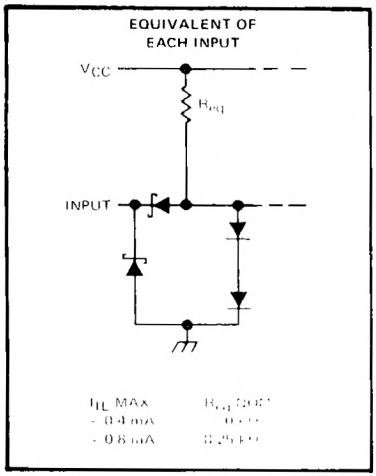

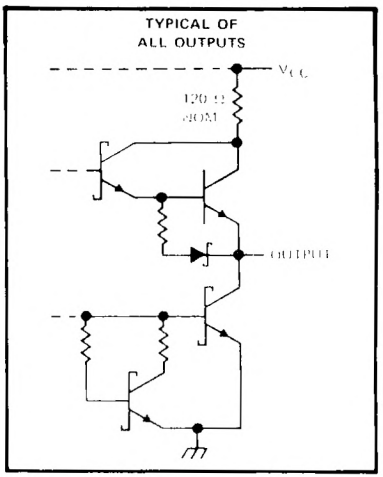

TEXAS INSTRUMENTS
POST OFFICE BOX 655012 • DALLAS, TEXAS 75265

logic diagrams (positive logic)

'73

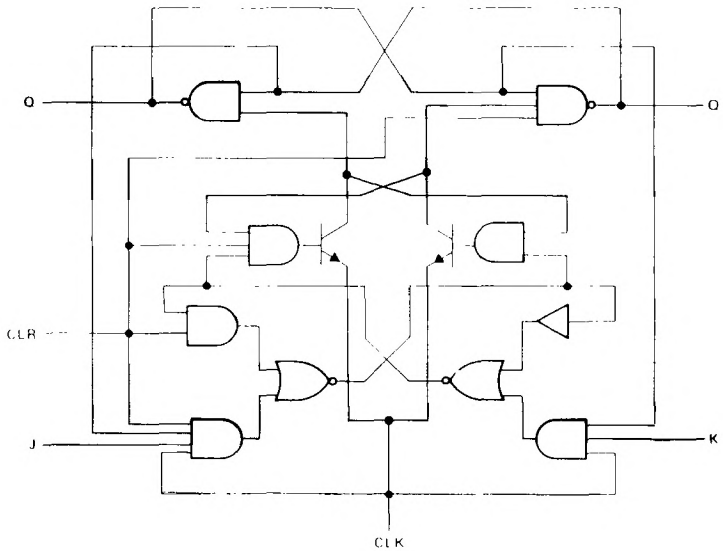

'LS73A

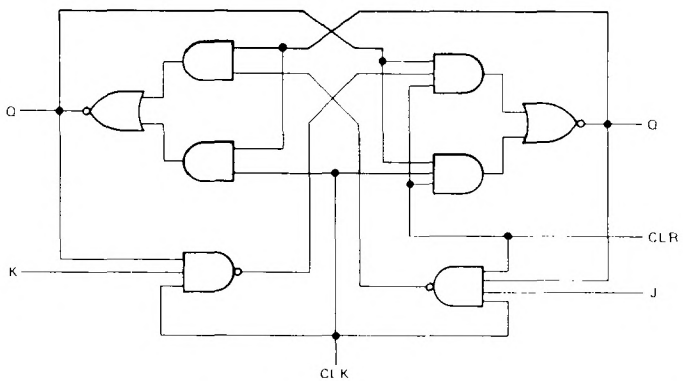

absolute maximum ratings over operating free-air temperature range (unless otherwise noted)

Supply voltage, V_{CC} (See Note 1)	7 V
Input voltage: '73	5.5 V
'LS73A	7 V
Operating free-air temperature range: SN54'	−55°C to 125°C
SN74'	0° C to 70°C
Storage temperature range	−65°C to 150°C

NOTE 1 Voltage values are with respect to network ground terminal

recommended operating conditions

			SN5473			SN7473			UNIT
			MIN	NOM	MAX	MIN	NOM	MAX	
V_{CC}	Supply voltage		4.5	5	5.5	4.75	5	5.25	V
V_{IH}	High-level input voltage		2			2			V
V_{IL}	Low-level input voltage				0.8			0.8	V
I_{OH}	High-level output current				−0.4			−0.4	mA
I_{OL}	Low-level output current				16			16	mA
t_w	Pulse duration	CLK high	20			20			ns
		CLK low	47			47			
		$\overline{CLR}$ low	25			25			
t_{su}	Input setup time before CLK↑		0			0			ns
t_h	Input hold time data after CLK↓		0			0			ns
T_A	Operating free-air temperature		−55		125	0		70	°C

electrical characteristics over recommended operating free-air temperature range (unless otherwise noted)

PARAMETER		TEST CONDITIONS†			SN5473			SN7473			UNIT
					MIN	TYP‡	MAX	MIN	TYP‡	MAX	
V_{IK}		V_{CC} = MIN,	I_I = −12 mA				−1.5			−1.5	V
V_{OH}		V_{CC} = MIN, I_{OH} = −0.4 mA	V_{IH} = 2 V,	V_{IL} = 0.8 V,	2.4	3.4		2.4	3.4		V
V_{OL}		V_{CC} = MIN, I_{OL} = 16 mA	V_{IH} = 2 V,	V_{IL} = 0.8 V,		0.2	0.4		0.2	0.4	V
I_I		V_{CC} = MAX,	V_I = 5.5 V				1			1	mA
I_{IH}	J or K	V_{CC} = MAX,	V_I = 2.4 V				40			40	μA
	$\overline{CLR}$ or CLK						80			80	
I_{IL}	J or K	V_{CC} = MAX,	V_I = 0.4 V				−1.6			−1.6	mA
	$\overline{CLR}$						−3.2			−3.2	
	CLK						−3.2			−3.2	
I_{OS}§		V_{CC} = MAX			−20		−57	−18		−57	mA
I_{CC}¶		V_{CC} = MAX,	See Note 2			10	20		10	20	mA

† For conditions shown as MIN or MAX, use the appropriate value specified under recommended operating conditions.
‡ All typical values are at V_{CC} = 5 V, T_A = 25°C.
§ Not more than one output should be shorted at a time.
¶ Average per flip-flop.
NOTE 2: With all outputs open, I_{CC} is measured with the Q and $\overline{Q}$ outputs high in turn. At the time of measurement, the clock input is grounded.

switching characteristics, V_{CC} = 5 V, T_A = 25°C (see note 3)

PARAMETER#	FROM (INPUT)	TO (OUTPUT)	TEST CONDITIONS	MIN	TYP	MAX	UNIT
f_{max}			R_L = 400 Ω, C_L = 15 pF	15	20		MHz
t_{PLH}	$\overline{CLR}$	$\overline{Q}$			16	25	ns
t_{PHL}		Q			25	40	ns
t_{PLH}	CLK	Q or $\overline{Q}$			16	25	ns
t_{PHL}					25	40	ns

#f_{max} = maximum clock frequency; t_{PLH} = propagation delay time, low-to-high-level output; t_{PHL} = propagation delay time, high-to-low-level output.
NOTE 3: Load circuits and voltage waveforms are shown in Section 1.

TEXAS INSTRUMENTS
POST OFFICE BOX 655012 • DALLAS, TEXAS 75265

recommended operating conditions

			SN54LS73A			SN74LS73A			UNIT
			MIN	NOM	MAX	MIN	NOM	MAX	
V_{CC}	Supply voltage		4.5	5	5.5	4.75	5	5.25	V
V_{IH}	High-level input voltage		2			2			V
V_{IL}	Low-level input voltage				0.7			0.8	V
I_{OH}	High-level output current				−0.4			−0.4	mA
I_{OL}	Low-level output current				4			8	mA
f_{clock}	Clock frequency		0		30	0		30	MHz
t_w	Pulse duration	CLK high	20			20			ns
		$\overline{CLR}$ low	25			20			
t_{su}	Set up time-before CLK↓	data high or low	20			20			ns
		$\overline{CLR}$ inactive	20			20			
t_h	Hold time-data after CLK↓		0			0			ns
T_A	Operating free-air temperature		−55		125	0		70	°C

electrical characteristics over recommended operating free-air temperature range (unless otherwise noted)

PARAMETER		TEST CONDITIONS†			SN54LS73A			SN74LS73A			UNIT
					MIN	TYP‡	MAX	MIN	TYP‡	MAX	
V_{IK}		V_{CC} = MIN,	I_I = −18 mA				−1.5			−1.5	V
V_{OH}		V_{CC} = MIN, I_{OH} = −0.4 mA	V_{IH} = 2 V,	V_{IL} = MAX,	2.5	3.4		2.7	3.4		V
V_{OL}		V_{CC} = MIN, I_{OL} = 4 mA	V_{IL} = MAX,	V_{IH} = 2 V,		0.25	0.4		0.25	0.4	V
		V_{CC} = MIN, I_{OL} = 8 mA	V_{IL} = MAX,	V_{IH} = 2 V,					0.35	0.5	
I_I	J or K	V_{CC} = MAX,	V_I = 7 V				0.1			0.1	mA
	$\overline{CLR}$						0.3			0.3	
	CLK						0.4			0.4	
I_{IH}	J or K	V_{CC} = MAX,	V_I = 2.7 V				20			20	μA
	$\overline{CLR}$						60			60	
	CLK						80			80	
I_{IL}	J or K	V_{CC} = MAX,	V_I = 0.4 V				−0.4			−0.4	mA
	$\overline{CLR}$ or CLK						−0.8			−0.8	
I_{OS}§		V_{CC} = MAX,	See Note 4		−20		−100	−20		−100	mA
I_{CC} (Total)		V_{CC} = MAX,	See Note 2			4	6		4	6	mA

† For conditions shown as MIN or MAX, use the appropriate value specified under recommended operating conditions.
‡ All typical values are at V_{CC} = 5 V, T_A = 25°C.
§ Not more than one output should be shorted at a time, and the duration of the short circuit should not exceed one second.
NOTE 2: With all outputs open, I_{CC} is measured with the Q and $\overline{Q}$ outputs high in turn. At the time of measurement, the clock input is grounded.
NOTE 4: For certain devices where state commutation can be caused by shorting an output to ground, an equivalent test may be performed with V_O = 2.25 V and 2.125 V for the 54 family and the 74 family, respectively, with the minimum and maximum limits reduced to one half of their stated values.

switching characteristics, V_{CC} = 5 V, T_A = 25°C (see note 3)

PARAMETER	FROM (INPUT)	TO (OUTPUT)	TEST CONDITIONS	MIN	TYP	MAX	UNIT
f_{max}			R_L = 2 kΩ, C_L = 15 pF	30	45		MHz
t_{PLH}	$\overline{CLR}$ or CLK	Q or $\overline{Q}$			15	20	ns
t_{PHL}					15	20	ns

NOTE 3: Load circuits and voltage waveforms are shown in Section 1.

DUAL D-TYPE POSITIVE-EDGE-TRIGGERED FLIP-FLOPS WITH PRESET AND CLEAR

DECEMBER 1983 – REVISED MARCH 1988

- **Package Options Include Plastic "Small Outline" Packages, Ceramic Chip Carriers and Flat Packages, and Plastic and Ceramic DIPs**
- **Dependable Texas Instruments Quality and Reliability**

description

These devices contain two independent D-type positive-edge-triggered flip-flops. A low level at the preset or clear inputs sets or resets the outputs regardless of the levels of the other inputs. When preset and clear are inactive (high), data at the D input meeting the setup time requirements are transferred to the outputs on the positive-going edge of the clock pulse. Clock triggering occurs at a voltage level and is not directly related to the rise time of the clock pulse. Following the hold time interval, data at the D input may be changed without affecting the levels at the outputs

The SN54' family is characterized for operation over the full military temperature range of −55°C to 125°C. The SN74' family is characterized for operation from 0°C to 70°C.

FUNCTION TABLE

INPUTS				OUTPUTS	
$\overline{PRE}$	$\overline{CLR}$	CLK	D	Q	$\overline{Q}$
L	H	X	X	H	L
H	L	X	X	L	H
L	L	X	X	H†	H†
H	H	↑	H	H	L
H	H	↑	L	L	H
H	H	L	X	Q_0	$\overline{Q}_0$

† The output levels in this configuration are not guaranteed to meet the minimum levels in V_{OH} if the lows at preset and clear are near V_{IL} maximum. Furthermore, this configuration is nonstable, that is, it will not persist when either preset or clear returns to its inactive (high) level.

logic symbol‡

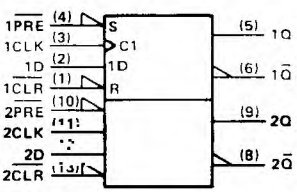

‡This symbol is in accordance with ANSI/IEEE Std 91-1984 and IEC Publication 617-12.

Pin numbers shown are for D, J, N, and W packages.

SN5474 . . . J PACKAGE
SN54LS74A, SN54S74 . . . J OR W PACKAGE
SN7474 . . . N PACKAGE
SN74LS74A, SN74S74 . . . D OR N PACKAGE
(TOP VIEW)

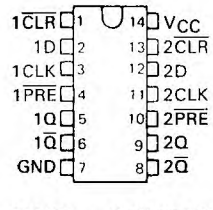

SN5474 . . . W PACKAGE
(TOP VIEW)

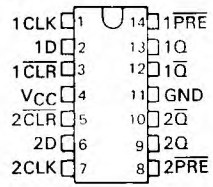

SN54LS74A, SN54S74 . . . FK PACKAGE
(TOP VIEW)

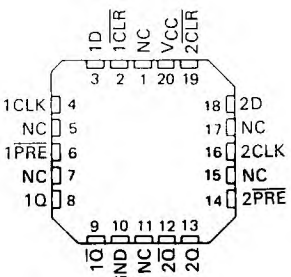

NC - No internal connection

logic diagram (positive logic)

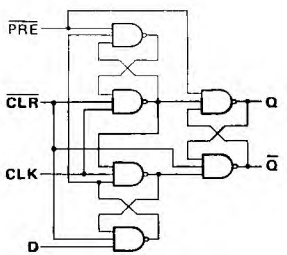

PRODUCTION DATA documents contain information current as of publication date. Products conform to specifications per the terms of Texas Instruments standard warranty. Production processing does not necessarily include testing of all parameters.

schematics of inputs and outputs

'74

EQUIVALENT OF EACH INPUT

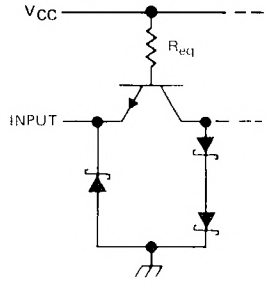

I_{IL} MAX	R_{eq} NOM
−1.6 mA	4 kΩ
−3.2 mA	2 kΩ

TYPICAL OF ALL OUTPUTS

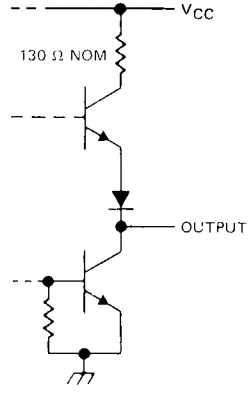

'S74

EQUIVALENT OF EACH INPUT

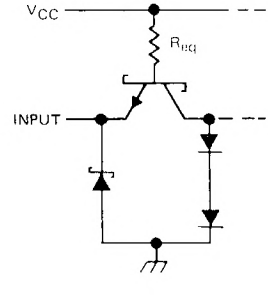

I_{IL} MAX	R_{eq} NOM
−2 mA	2.8 kΩ
−4 mA	1.4 kΩ
−6 mA	940 Ω

TYPICAL OF ALL OUTPUTS

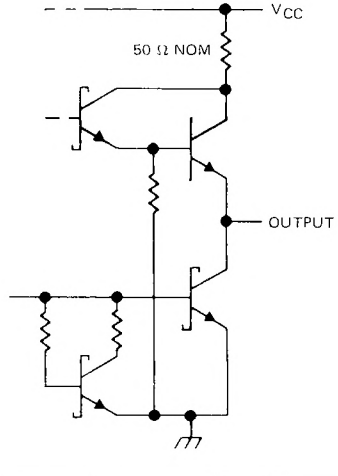

2 TTL Devices

TEXAS INSTRUMENTS
POST OFFICE BOX 655012 • DALLAS, TEXAS 75265

schematic

'LS74A

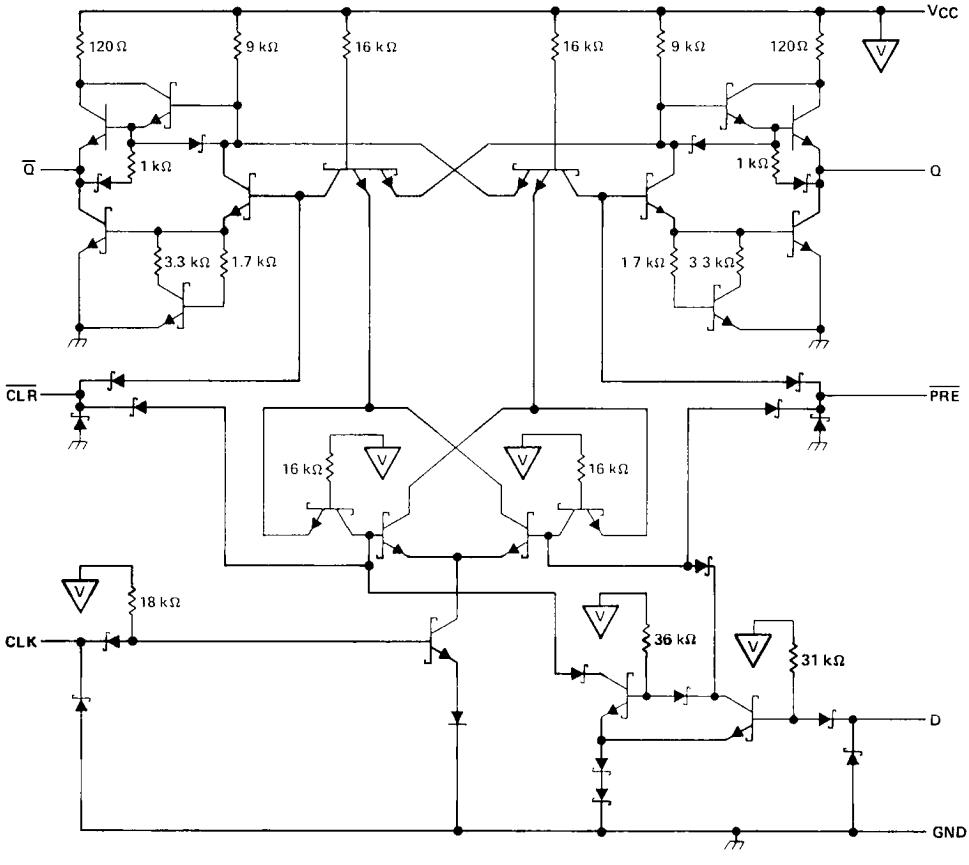

absolute maximum ratings over operating free-air temperature range (unless otherwise noted)

Supply voltage, V_{CC} (see Note 1) . . . . . 7 V
Input voltage: '74, 'S74 . . . . . 5.5 V
'LS74A . . . . . 7 V
Operating free-air temperature range: SN54' . . . . . −55°C to 125°C
SN74' . . . . . 0°C to 70°C
Storage temperature range . . . . . −65°C to 150°C

NOTE 1: Voltage values are with respect to network ground terminal.

recommended operating conditions

			SN5474			SN7474			UNIT
			MIN	NOM	MAX	MIN	NOM	MAX	
V_{CC}	Supply voltage		4.5	5	5.5	4.75	5	5.25	V
V_{IH}	High-level input voltage		2			2			V
V_{IL}	Low-level input voltage				0.8			0.8	V
I_{OH}	High-level output current				−0.4			−0.4	mA
I_{OL}	Low-level output current				16			16	mA
t_w	Pulse duration	CLK high	30			30			ns
		CLK low	37			37			
		PRE or CLR low	30			30			
t_{su}	Input setup time before CLK ↑		20			20			ns
t_h	Input hold time-data after CLK ↑		5			5			ns
T_A	Operating free-air temperature		−55		125	0		70	°C

electrical characteristics over recommended operating free-air temperature range (unless otherwise noted)

PARAMETER		TEST CONDITIONS†			SN5474			SN7474			UNIT
					MIN	TYP‡	MAX	MIN	TYP‡	MAX	
V_{IK}		V_{CC} = MIN,	I_I = −12 mA				−1.5			−1.5	V
V_{OH}		V_{CC} = MIN, I_{OH} = −0.4 mA	V_{IH} = 2 V,	V_{IL} = 0.8 V,	2.4	3.4		2.4	3.4		V
V_{OL}		V_{CC} = MIN, I_{OL} = 16 mA	V_{IH} = 2 V,	V_{IL} = 0.8 V,		0.2	0.4		0.2	0.4	V
I_I		V_{CC} = MAX,	V_I = 5.5 V				1			1	mA
I_{IH}	D	V_{CC} = MAX,	V_I = 2.4 V				40			40	μA
	CLR						120			120	
	All Other						80			80	
I_{IL}	D	V_{CC} = MAX,	V_I = 0.4 V				−1.6			−1.6	mA
	PRE§						−1.6			−1.6	
	CLK						−3.2			−3.2	
	CLR						−3.2			−3.2	
I_{OS}¶		V_{CC} = MAX			−20		−57	−18		−57	mA
I_{CC}#		V_{CC} = MAX,	See Note 2			8.5	15		8.5	15	mA

†For conditions shown as MIN or MAX, use the appropriate value specified under recommended operating conditions.
‡All typical values are at V_{CC} = 5 V, T_A = 25°C.
§Clear is tested with preset high and preset is tested with clear high.
¶Not more than one output should be shown at a time.
#Average per flip-flop.
NOTE 2: With all outputs open, I_{CC} is measured with the Q and $\overline{Q}$ outputs high in turn. At the time of measurement, the clock input is grounded.

switching charateristics, V_{CC} = 5 V, T_A = 25°C (see note 3)

PARAMETER	FROM (INPUT)	TO (OUTPUT)	TEST CONDITIONS	MIN	TYP	MAX	UNIT
f_{max}			R_L = 400 Ω, C_L = 15 pF	15	25		MHz
t_{PLH}	$\overline{PRE}$ or $\overline{CLR}$	Q or $\overline{Q}$				25	ns
t_{PHL}						40	ns
t_{PLH}	CLK	Q or $\overline{Q}$			14	25	ns
t_{PHL}					20	40	ns

NOTE 3: Load circuits and voltage waveforms are shown in Section 1.

TEXAS INSTRUMENTS
POST OFFICE BOX 655012 • DALLAS, TEXAS 75265

recommended operating conditions

			SN54LS74A			SN74LS74A			UNIT
			MIN	NOM	MAX	MIN	NOM	MAX	
V_{CC}	Supply voltage		4.5	5	5.5	4.75	5	5.25	V
V_{IH}	High-level input voltage		2			2			V
V_{IL}	Low-level input voltage				0.7			0.8	V
I_{OH}	High-level output current				−0.4			−0.4	mA
I_{OL}	Low-level output current				4			8	mA
f_{clock}	Clock frequency		0		25	0		25	MHz
t_w	Pulse duration	CLK high	25			25			ns
		$\overline{PRE}$ or $\overline{CLR}$ low	25			25			
t_{su}	Setup time-before CLK↑	High-level data	20			20			ns
		Low-level data	20			20			
t_h	Hold time-data after CLK↑		5			5			ns
T_A	Operating free-air temperature		−55		125	0		70	°C

electrical characteristics over recommended operating free-air temperature range (unless otherwise noted)

PARAMETER		TEST CONDITIONS†			SN54LS74A			SN74LS74A			UNIT
					MIN	TYP‡	MAX	MIN	TYP‡	MAX	
V_{IK}		V_{CC} = MIN,	I_I = −18 mA				−1.5			−1.5	V
V_{OH}		V_{CC} = MIN, I_{OH} = −0.4 mA	V_{IH} = 2 V,	V_{IL} = MAX,	2.5	3.4		2.7	3.4		V
V_{OL}		V_{CC} = MIN, I_{OL} = 4 mA	V_{IL} = MAX,	V_{IH} = 2 V,		0.25	0.4		0.25	0.4	V
		V_{CC} = MIN, I_{OL} = 8 mA	V_{IL} = MAX,	V_{IH} = 2 V,					0.35	0.5	
I_I	D or CLK	V_{CC} = MAX,	V_I = 7 V				0.1			0.1	mA
	$\overline{CLR}$ or $\overline{PRE}$						0.2			0.2	
I_{IH}	D or CLK	V_{CC} = MAX,	V_I = 2.7 V				20			20	µA
	$\overline{CLR}$ or $\overline{PRE}$						40			40	
I_{IL}	D or CLK	V_{CC} = MAX,	V_I = 0.4 V				−0.4			−0.4	mA
	$\overline{CLR}$ or $\overline{PRE}$						−0.8			−0.8	
I_{OS}§		V_{CC} = MAX,	See Note 4		−20		−100	−20		−100	mA
I_{CC} (Total)		V_{CC} = MAX,	See Note 2			4	8		4	8	mA

† For conditions shown as MIN or MAX, use the appropriate value specified under recommended operating conditions.
‡ All typical values are at V_{CC} = 5 V, T_A = 25°C.
§ Not more than one output should be shorted at a time, and the duration of the short circuit should not exceed one second.
NOTE 2: With all outputs open, I_{CC} is measured with the Q and $\overline{Q}$ outputs high in turn. At the time of measurement, the clock input is grounded.
NOTE 4: For certain devices where state commutation can be caused by shorting an output to ground, an equivalent test may be performed with V_O = 2.25 V and 2.125 V for the 54 family and the 74 family, respectively, with the minimum and maximum limits reduced to one half of their stated values.

switching characteristics, V_{CC} = 5 V, T_A = 25°C (see note 3)

PARAMETER	FROM (INPUT)	TO (OUTPUT)	TEST CONDITIONS	MIN	TYP	MAX	UNIT
f_{max}			R_L = 2 kΩ, C_L = 15 pF	25	33		MHz
t_{PLH}	$\overline{CLR}$, $\overline{PRE}$ or CLK	Q or $\overline{Q}$			13	25	ns
t_{PHL}					25	40	ns

Note 3: Load circuits and voltage waveforms are shown in Section 1

recommended operating conditions

			SN54S74			SN74S74			UNIT
			MIN	NOM	MAX	MIN	NOM	MAX	
V_{CC}	Supply voltage		4.5	5	5.5	4.75	5	5.25	V
V_{IH}	High-level input voltage		2			2			V
V_{IL}	Low-level input voltage				0.8			0.8	V
I_{OH}	High-level output current				−1			−1	mA
I_{OL}	Low-level output current				20			20	mA
t_w	Pulse duration	CLK high	6			6			ns
		CLK low	7.3			7.3			
		$\overline{CLR}$ or $\overline{PRE}$ low	7			7			
t_{su}	Setup time, before CLK ↑	High-level data	3			3			ns
		Low-level data	3			3			
t_h	Input hold time - data after CLK ↑		2			2			ns
T_A	Operating free-air temperature		−55		125	0		70	°C

electrical characteristics over recommended operating free-air temperature range (unless otherwise noted)

PARAMETER		TEST CONDITIONS†	SN54S74			SN74S74			UNIT
			MIN	TYP‡	MAX	MIN	TYP‡	MAX	
V_{IK}		V_{CC} = MIN, I_I = −18 mA,			−1.2			−1.2	V
V_{OH}		V_{CC} = MIN, V_{IH} = 2 V, V_{IL} = 0.8 V, I_{OH} = −1 mA	2.5	3.4		2.7	3.4		V
V_{OL}		V_{CC} = MIN, V_{IH} = 2 V, V_{IL} = 0.8 V, I_{OL} = 20 mA			0.5			0.5	V
I_I		V_{CC} = MAX, V_I = 5.5 V			1			1	mA
I_{IH}	D	V_{CC} = MAX, V_I = 2.7 V			50			50	μA
	$\overline{CLR}$				150			150	
	$\overline{PRE}$ or CLK				100			100	
I_{IL}	D	V_{CC} = MAX, V_I = 0.5 V			−2			−2	mA
	$\overline{CLR}$				−6			−6	
	$\overline{PRE}$¶				−4			−4	
	CLK				−4			−4	
I_{OS}§		V_{CC} = MAX	−40		−100	−40		−100	mA
I_{CC}#		V_{CC} = MAX, See Note 2		15	25		15	25	mA

†For conditions shown as MIN or MAX, use the appropriate value specified under recommended operating conditions.
‡All typical values are at V_{CC} = 5 V, T_A = 25°C.
§Not more than one output should be shorted at a time, and the duration of the short circuit should not exceed one second.
¶Clear is tested with preset high and preset is tested with clear high.
#Average per flip-flop.
NOTE 2: With all outputs open, I_{CC} is measured with the Q and $\overline{Q}$ outputs high in turn. At the time of measurement, the clock input is grounded.

switching characteristics, V_{CC} = 5 V, T_A = 25°C (see note 3)

PARAMETER	FROM (INPUT)	TO (OUTPUT)	TEST CONDITIONS	MIN	TYP	MAX	UNIT
f_{max}			R_L = 280 Ω, C_L = 15 pF	75	110		MHz
t_{PLH}	$\overline{PRE}$ or $\overline{CLR}$	Q or $\overline{Q}$			4	6	ns
t_{PHL}	$\overline{PRE}$ or $\overline{CLR}$ (CLK high)	$\overline{Q}$ or Q			9	13.5	ns
	$\overline{PRE}$ or $\overline{CLR}$ (CLK low)				5	8	
t_{PLH}	CLK	Q or $\overline{Q}$			6	9	ns
t_{PHL}					6	9	ns

NOTE 3: Load circuits and voltage waveforms are shown in Section 1.

TEXAS INSTRUMENTS
POST OFFICE BOX 655012 • DALLAS, TEXAS 75265

FUNCTION TABLE
(each latch)

INPUTS		OUTPUTS	
D	C	Q	$\overline{Q}$
L	H	L	H
H	H	H	L
X	L	Q_0	$\overline{Q}_0$

H = high level, L = low level, X = irrelevant
Q_0 = the level of Q before the high-to-low transition of G

SN5475, SN54LS75 . . . J OR W PACKAGE
SN7475 . . . N PACKAGE
SN74LS75 . . . D OR N PACKAGE
(TOP VIEW)

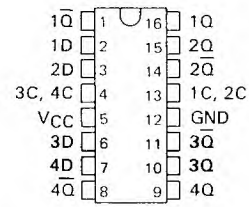

SN5477, SN54LS77 . . . W PACKAGE
(TOP VIEW)

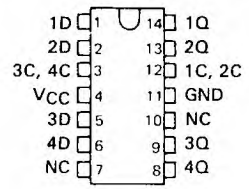

NC – No internal connection

description

These latches are ideally suited for use as temporary storage for binary information between processing units and input/output or indicator units. Information present at a data (D) input is transferred to the Q output when the enable (C) is high and the Q output will follow the data input as long as the enable remains high. When the enable goes low, the information (that was present at the data input at the time the transition occurred) is retained at the Q output until the enable is permitted to go high.

The '75 and 'LS75 feature complementary Q and $\overline{Q}$ outputs from a 4-bit latch, and are available in various 16-pin packages. For higher component density applications, the '77 and 'LS77 4-bit latches are available in 14-pin flat packages.

These circuits are completely compatible with all popular TTL families. All inputs are diode-clamped to minimize transmission-line effects and simplify system design. Series 54 and 54LS devices are characterized for operation over the full military temperature range of −55°C to 125°C; Series 74, and 74LS devices are characterized for operation from 0°C to 70°C.

logic symbols†

'75, 'LS75

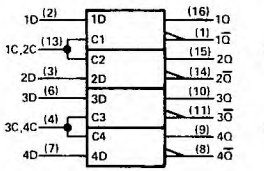

'77, 'LS77

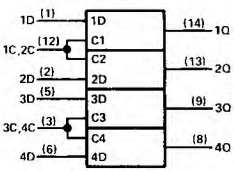

†These symbols are in accordance with ANSI/IEEE Std 91-1984 and IEC Publication 617-12

absolute maximum ratings over operating free-air temperature range (unless otherwise noted)

Supply voltage, V_{CC} (See Note 1) . . . . . 7 V
Input voltage: '75, '77 . . . . . 5.5 V
'LS75, 'LS77 . . . . . 7 V
Interemitter voltage (see Note 2) . . . . . 5.5 V
Operating free-air temperature range: SN54' . . . . . −55°C to 125°C
SN74' . . . . . 0° C to 70°C
Storage temperature range . . . . . −65°C to 150°C

NOTES: 1. Voltage values are with respect to network ground terminal.
2. This is the voltage between two emitters of a multiple-emitter input transistor and is not applicable to the 'LS75 and 'LS77.

PRODUCTION DATA documents contain information current as of publication date. Products conform to specifications per the terms of Texas Instruments standard warranty. Production processing does not necessarily include testing of all parameters.

logic diagrams (each latch) (positive logic)

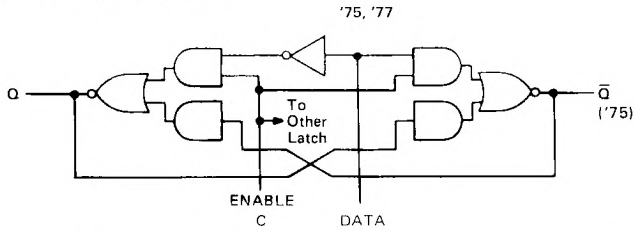

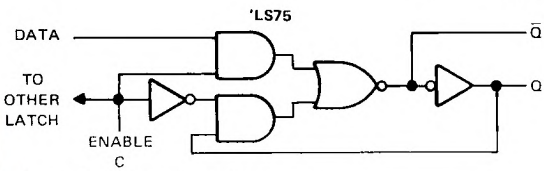

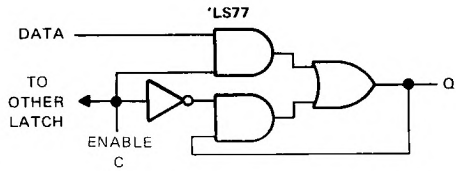

schematics of inputs and outputs

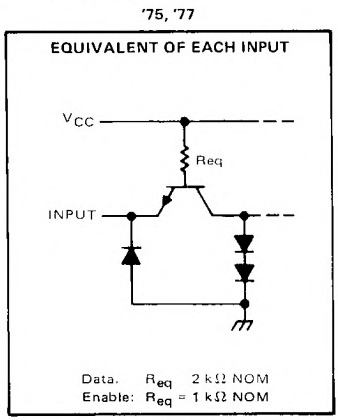

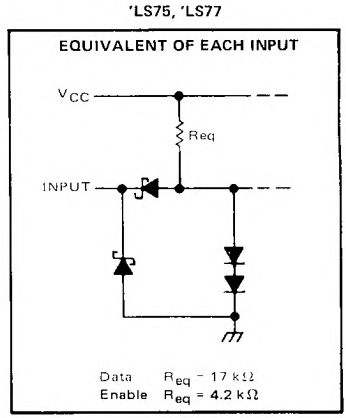

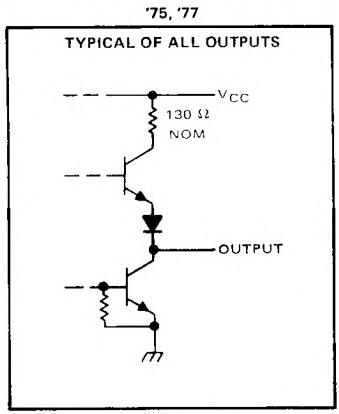

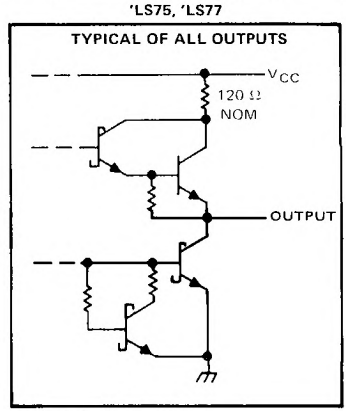

TEXAS INSTRUMENTS
POST OFFICE BOX 655012 • DALLAS, TEXAS 75265

recommended operating conditions

	SN5475, SN5477			SN7475			UNIT
	MIN	NOM	MAX	MIN	NOM	MAX	
Supply voltage, V_{CC}	4.5	5	5.5	4.75	5	5.25	V
High-level output current, I_{OH}			−400			−400	μA
Low-level output current, I_{OL}			16			16	mA
Width of enabling pulse, t_w	20			20			ns
Setup time, t_{su}	20			20			ns
Hold time, t_h	5			5			ns
Operating free-air temperature, T_A	−55		125	0		70	°C

electrical characteristics over recommended operating free-air temperature range (unless otherwise noted)

PARAMETER			TEST CONDITIONS†		MIN	TYP‡	MAX	UNIT
V_{IH}	High-level input voltage				2			V
V_{IL}	Low-level input voltage						0.8	V
V_{IK}	Input clamp voltage		V_{CC} = MIN, I_I = −12 mA				−1.5	V
V_{OH}	High-level output voltage		V_{CC} = MIN, V_{IH} = 2 V, V_{IL} = 0.8 V, I_{OH} = −400 μA		2.4	3.4		V
V_{OL}	Low-level output voltage		V_{CC} = MIN, V_{IH} = 2 V, V_{IL} = 0.8 V, I_{OL} = 16 mA			0.2	0.4	V
I_I	Input current at maximum input voltage		V_{CC} = MAX, V_I = 5.5 V				1	mA
I_{IH}	High-level input current	D input	V_{CC} = MAX, V_I = 2.4 V				80	μA
		C input					160	
I_{IL}	Low-level input current	D input	V_{CC} = MAX, V_I = 0.4 V				−3.2	mA
		C input					−6.4	
I_{OS}	Short-circuit output current§		V_{CC} = MAX	SN54'	−20		−57	mA
				SN74'	−18		−57	
I_{CC}	Supply current		V_{CC} = MAX, See Note 3	SN54'		32	46	mA
				SN74'		32	53	

†For conditions shown as MIN or MAX, use the appropriate value specified under recommended operating conditions.
‡All typical values are at V_{CC} = 5 V, T_A = 25°C.
§Not more than one output should be shorted at a time.
NOTE 3: I_{CC} is tested with all inputs grounded and all outputs open.

switching characteristics, V_{CC} = 5 V, T_A = 25°C

PARAMETER	FROM (INPUT)	TO (OUTPUT)	TEST CONDITIONS	MIN	TYP	MAX	UNIT
t_{PLH}	D	Q	C_L = 15 pF, R_L = 400 Ω, See Figure 1		16	30	ns
t_{PHL}					14	25	
t_{PLH}¶	D	$\overline{Q}$			24	40	ns
t_{PHL}¶					7	15	
t_{PLH}	C	Q			16	30	ns
t_{PHL}					7	15	
t_{PLH}¶	C	$\overline{Q}$			16	30	ns
t_{PHL}¶					7	15	

t_{PLH} = propagation delay time, low-to-high-level output
t_{PHL} = propagation delay time, high-to-low-level output
¶These parameters are not applicable for the SN5477.

recommended operating conditions

	SN54LS75 SN54LS77			SN74LS75			UNIT
	MIN	NOM	MAX	MIN	NOM	MAX	
Supply voltage, V_{CC}	4.5	5	5.5	4.75	5	5.25	V
High-level output current, I_{OH}			−400			−400	μA
Low-level output current, I_{OL}			4			8	mA
Width of enabling pulse, t_w	20			20			ns
Setup time, t_{su}	20			20			ns
Hold time, t_h	5			5			ns
Operating free-air temperature, T_A	−55		125	0		70	°C

electrical characteristics over recommended operating free-air temperature range (unless otherwise noted)

PARAMETER		TEST CONDITIONS†			SN54LS75 SN54LS77			SN74LS75			UNIT
					MIN	TYP‡	MAX	MIN	TYP‡	MAX	
V_{IH}	High-level input voltage				2			2			V
V_{IL}	Low-level input voltage						0.7			0.8	V
V_{IK}	Input clamp voltage	V_{CC} = MIN,	I_I = −18 mA				−1.5			−1.5	V
V_{OH}	High-level output voltage	V_{CC} = MIN, V_{IL} = V_{IL} max,	V_{IH} = 2 V, I_{OH} = −400 μA		2.5	3.5		2.7	3.5		V
V_{OL}	Low-level output voltage	V_{CC} = MIN, V_{IL} = V_{IL} max	V_{IH} = 2 V,	I_{OL} = 4 mA		0.25	0.4		0.25	0.4	V
				I_{OL} = 8 mA					0.35	0.5	
I_I	Input current at maximum input voltage	V_{CC} = MAX,	V_I = 7 V	D input			0.1			0.1	mA
				C input			0.4			0.4	
I_{IH}	High-level input current	V_{CC} = MAX,	V_I = 2.7 V	D input			20			20	μA
				C input			80			80	
I_{IL}	Low-level input current	V_{CC} = MAX,	V_I = 0.4 V	D input			−0.4			−0.4	mA
				C input			−1.6			−1.6	
I_{OS}	Short-circuit output current§	V_{CC} = MAX			−20		−100	−20		−100	mA
I_{CC}	Supply current	V_{CC} = MAX,	See Note 2	'LS75		6.3	12		6.3	12	mA
				'LS77		6.9	13				

† For conditions shown as MIN or MAX, use the appropriate value specified under recommended operating conditions.
‡ All typical values are at V_{CC} = 5 V, T_A = 25°C
§ Not more than one output should be shorted at a time, and duration of the short circuit should not exceed one second
NOTE 2. I_{CC} is tested with all inputs grounded and all outputs open.

switching characteristics, V_{CC} = 5 V, T_A = 25°C

PARAMETER¶	FROM (INPUT)	TO (OUTPUT)	TEST CONDITIONS	'LS75			'LS77			UNIT
				MIN	TYP	MAX	MIN	TYP	MAX	
t_{PLH}	D	Q	C_L = 15 pF, R_L = 2 kΩ, See Figure 1		15	27		11	19	ns
t_{PHL}					9	17		9	17	
t_{PLH}	D	$\overline{Q}$			12	20				ns
t_{PHL}					7	15				
t_{PLH}	C	Q			15	27		10	18	ns
t_{PHL}					14	25		10	18	
t_{PLH}	C	$\overline{Q}$			16	30				ns
t_{PHL}					7	15				

¶ t_{PLH} = propagation delay time, low-to-high-level output
t_{PLH} = propagation delay time, high-to-low-level output

TEXAS INSTRUMENTS
POST OFFICE BOX 655012 • DALLAS, TEXAS 75265

PARAMETER MEASUREMENT INFORMATION

switching characteristics†

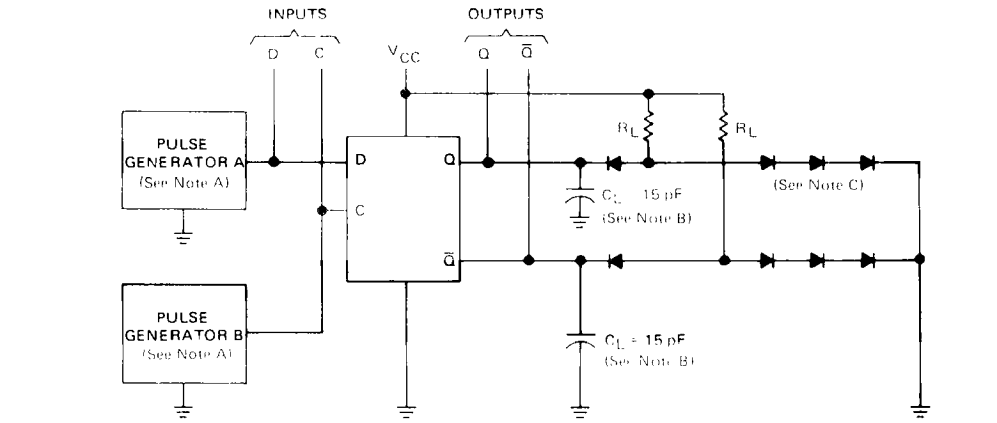

TEST CIRCUIT

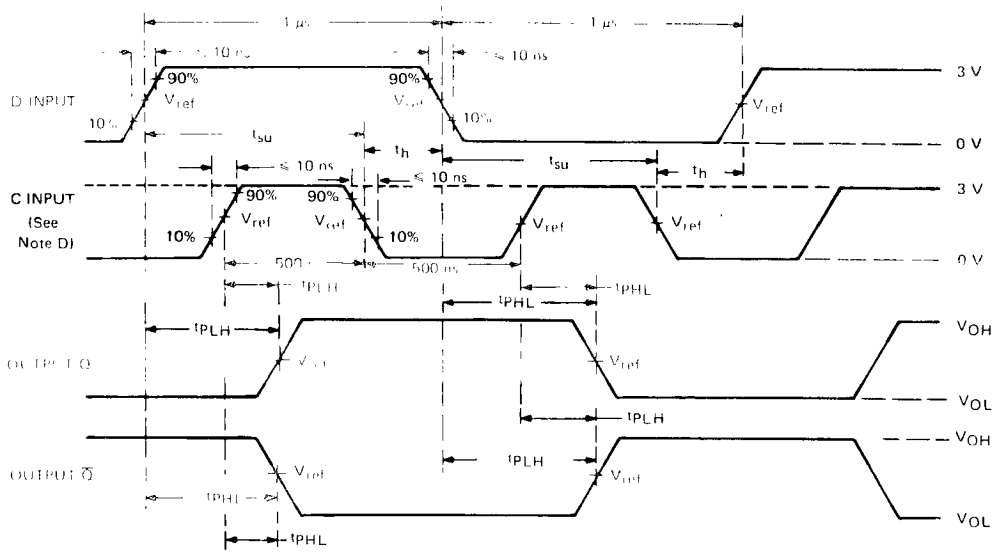

VOLTAGE WAVEFORMS

†Complementary Q outputs are on the '75 and 'LS75 only.

NOTES. A. The pulse generators have the following characteristics: $Z_{out} \approx 50\ \Omega$; for pulse generator A, PRR ≤ 500 kHz; for pulse generator B, PRR ≤ 1 MHz. Positions of D and C input pulses are varied with respect to each other to verify setup times.

B. C_L includes probe and jig capacitance

C. All diodes are 1N3064 or equivalent.

D. When measuring propagation delay times from the D input, the corresponding C input must be held high.

E. For '75 and '77, V_{ref} = 1.5 V, for 'LS75 and 'LS77, V_{ref} = 1.3 V.

FIGURE 1

- **Package Options Include Plastic and Ceramic DIPs and Ceramic Flat Packages**
- **Dependable Texas Instruments Quality and Reliability**

SN5476, SN54LS76A . . . J PACKAGE
SN7476 . . . N PACKAGE
SN74LS76A . . . D OR N PACKAGE
(TOP VIEW)

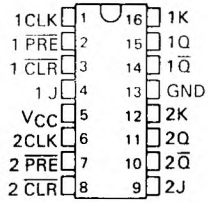

description

The '76 contains two independent J-K flip-flops with individual J-K, clock, preset, and clear inputs. The '76 is a positive-edge-triggered flip-flop. J-K input is loaded into the master while the clock is high and transferred to the slave on the high-to-low transition. For these devices the J and K inputs must be stable while the clock is high.

The 'LS76A contain two independent negative-edge-triggered flip-flops. The J and K inputs must be stable one setup time prior to the high-to-low clock transition for predicatble operation. The preset and clear are asynchronous active low inputs. When low they override the clock and data inputs forcing the outputs to the steady state levels as shown in the function table.

The SN5476 and the SN54LS76A are characterized for operation over the full military temperature range of −55°C to 125°C. The SN7476 and the SN74LS76A are characterized for operation from 0°C to 70°C.

'76
FUNCTION TABLE

INPUTS					OUTPUTS	
PRE	CLR	CLK	J	K	Q	Q̄
L	H	X	X	X	H	L
H	L	X	X	X	L	H
L	L	X	X	X	H†	H†
H	H	⊓	L	L	Q_0	$\overline{Q}_0$
H	H	⊓	H	L	H	L
H	H	⊓	L	H	L	H
H	H	⊓	H	H	TOGGLE	

'LS76A
FUNCTION TABLE

INPUTS					OUTPUTS	
PRE	CLR	CLK	J	K	Q	Q̄
L	H	X	X	X	H	L
H	L	X	X	X	L	H
L	L	X	X	X	H†	H†
H	H	↓	L	L	Q_0	$\overline{Q}_0$
H	H	↓	H	L	H	L
H	H	↓	L	H	L	H
H	H	↓	H	H	TOGGLE	
H	H	H	X	X	Q_0	$\overline{Q}_0$

† This configuration is nonstable, that is, it will not persist when either preset or clear returns to its inactive (high) level

PRODUCTION DATA documents contain information current as of publication date. Products conform to specifications per the terms of Texas Instruments standard warranty. Production processing does not necessarily include testing of all parameters.

logic diagrams (positive logic)

'76

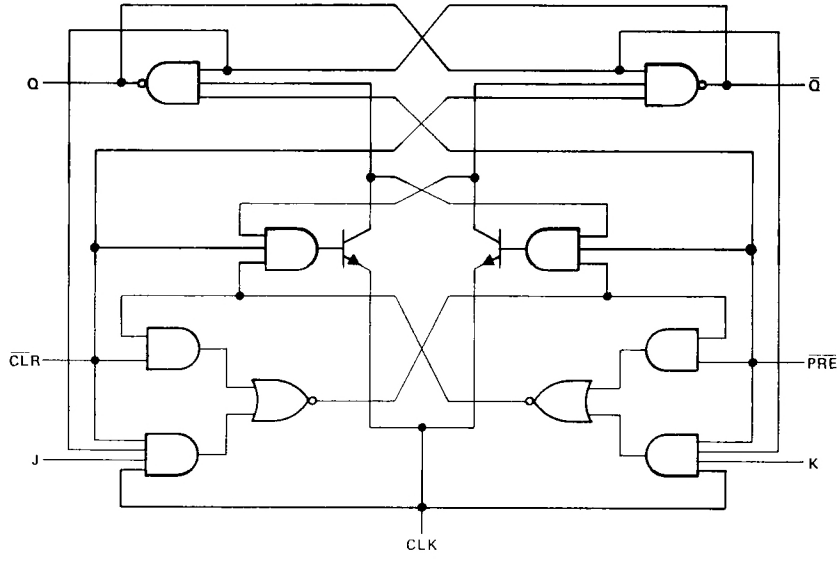

TEXAS INSTRUMENTS
POST OFFICE BOX 655012 • DALLAS, TEXAS 75265

logic diagrams (positive logic) (continued)

'LS76A

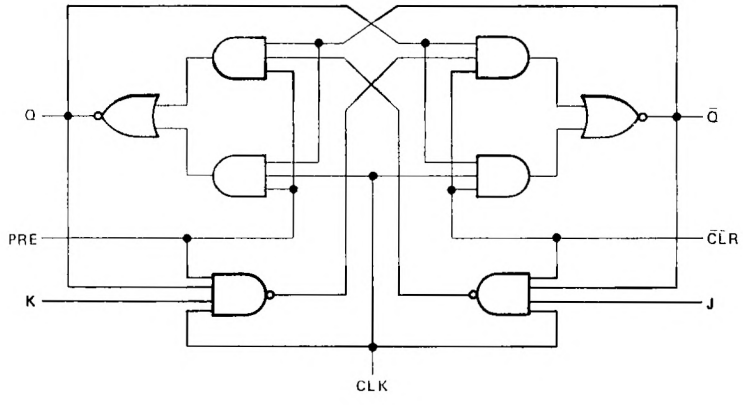

logic symbols†

'76

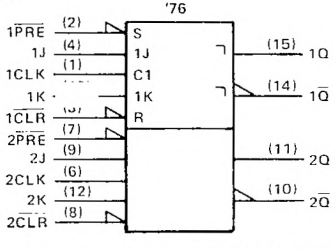

'LS76A

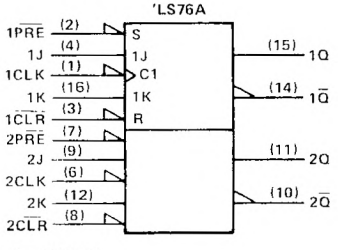

†These symbols are in accordance with ANSI/IEEE Std 91-1984 and IEC Publication 617-12.

schematics of inputs and outputs

'76

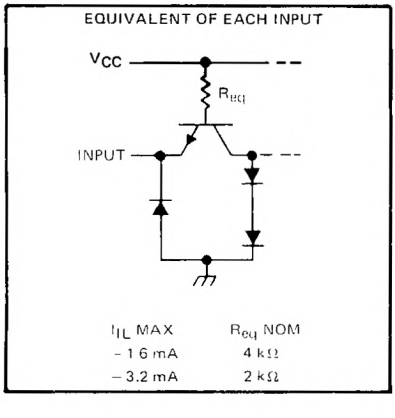

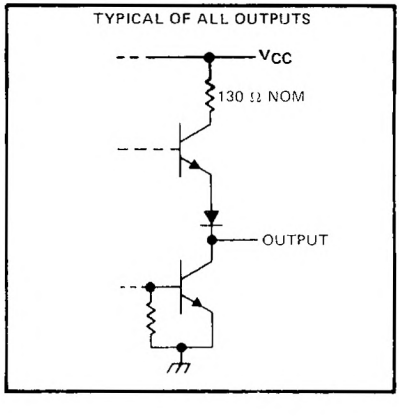

schematics of inputs and outputs (continued)

'LS76A

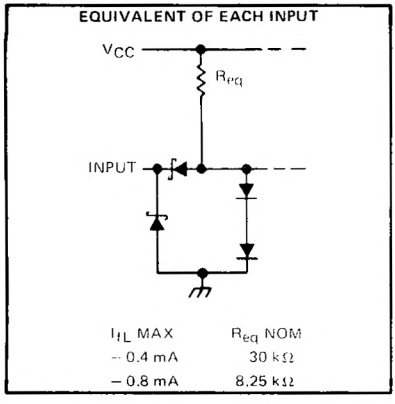

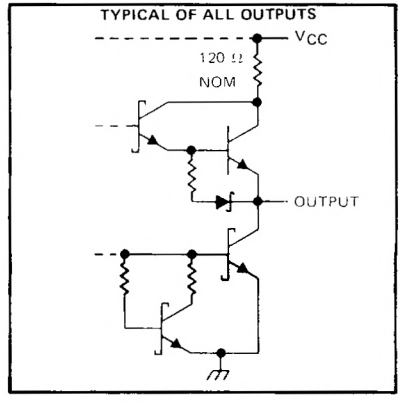

absolute maximum ratings over operating free-air temperature range (unless otherwise noted)

Supply voltage, V_{CC} (see **Note 1**) . . . . . 7 V
Input voltage: '76 . . . . . 5.5 V
'LS76A . . . . . 7 V
Operating free-air temperature range: SN54' . . . . . −55°C to 125°C
SN74' . . . . . 0°C to 70°C
Storage temperature range . . . . . −65°C to 150°C

NOTE 1: Voltage values are with respect to network ground terminal.

TEXAS INSTRUMENTS
POST OFFICE BOX 655012 • DALLAS, TEXAS 75265

recommended operating conditions

			SN5476			SN7476			UNIT
			MIN	NOM	MAX	MIN	NOM	MAX	
V_{CC}	Supply voltage		4.5	5	5.5	4.75	5	5.25	V
V_{IH}	High-level input voltage		2			2			V
V_{IL}	Low-level input voltage				0.8			0.8	V
I_{OH}	High-level output current				−0.4			−0.4	mA
I_{OL}	Low-level output current				16			16	mA
t_w	Pulse duration	CLK high	20			20			ns
		CLK low	47			47			
		$\overline{PRE}$ or $\overline{CLR}$ low	25			25			
t_{su}	Input setup time before CLK↑		0			0			ns
t_h	Input hold time-data after CLK↓		0			0			ns
T_A	Operating free-air temperature		−55		125	0		70	°C

electrical characteristics over recommended operating free-air temperature range (unless otherwise noted)

PARAMETER		TEST CONDITIONS†			SN5476			SN7476			UNIT
					MIN	TYP‡	MAX	MIN	TYP‡	MAX	
V_{IK}		V_{CC} = MIN,	I_I = −12 mA				−1.5			−1.5	V
V_{OH}		V_{CC} = MIN, I_{OH} = −0.4 mA	V_{IH} = 2 V,	V_{IL} = 0.8 V,	2.4	3.4		2.4	3.4		V
V_{OL}		V_{CC} = MIN, I_{OL} = 16 mA	V_{IH} = 2 V,	V_{IL} = 0.8 V,		0.2	0.4		0.2	0.4	V
I_I		V_{CC} = MAX,	V_I = 5.5 V				1			1	mA
I_{IH}	J or K	V_{CC} = MAX,	V_I = 2.4 V				40			40	μA
	All other						80			80	
I_{IL}	J or K	V_{CC} = MAX,	V_I = 0.4 V				−1.6			−1.6	mA
	All other¶						−3.2			−3.2	
I_{OS}§		V_{CC} = MAX			−20		−57	−18		−57	mA
I_{CC}#		V_{CC} = MAX,	See Note 2			10	20		10	20	mA

† For conditions shown as MIN or MAX, use the appropriate value specified under recommended operating conditions.
‡ All typical values are at V_{CC} = 5 V, T_A = 25°C.
§ Not more than one output should be shorted at a time.
¶ Clear is tested with preset high and preset is tested with clear high.
# Average per flip-flop.
NOTE 2: With all outputs open, I_{CC} is measured with the Q and $\overline{Q}$ outputs high in turn. At the time of measurement, the clock input is grounded.

switching characteristics, V_{CC} = 5 V, T_A = 25°C (see note 3)

PARAMETER	FROM (INPUT)	TO (OUTPUT)	TEST CONDITIONS	MIN	TYP	MAX	UNIT
f_{max}			R_L = 400 Ω, C_L = 15 pF	15	20		MHz
t_{PLH}	$\overline{PRE}$ or $\overline{CLR}$	Q or $\overline{Q}$			16	25	ns
t_{PHL}					25	40	ns
t_{PLH}	CLK	Q or $\overline{Q}$			16	25	ns
t_{PHL}					25	40	ns

NOTE 3: Load circuits and voltage waveforms are shown in Section 1.

recommended operating conditions

			SN54LS76A			SN74LS76A			UNIT
			MIN	NOM	MAX	MIN	NOM	MAX	
V_{CC}	Supply voltage		4.5	5	5.5	4.75	5	5.75	V
V_{IH}	High-level input voltage		2			2			V
V_{IL}	Low-level input voltage				0.7			0.8	V
I_{OH}	High-level output current				−0.4			−0.4	mA
I_{OL}	Low-level output current				4			8	mA
f_{clock}	Clock frequency		0		30	0		30	MHz
t_w	Pulse duration	CLK high	20			20			ns
		$\overline{PRE}$ or $\overline{CLR}$ low	25			25			
t_{su}	Setup time before CLK↓	Data high or low	20			20			ns
		$\overline{CLR}$ inactive	20			20			
		$\overline{PRE}$ inactive	25			25			
t_h	Hold time-data after CLK↓		0			0			ns
T_A	Operating free-air temperature		−55		125	0		70	°C

2 TTL Devices

electrical characteristics over recommended operating free-air temperature range (unless otherwise noted)

PARAMETER		TEST CONDITIONS†			SN54LS76A			SN74LS76A			UNIT
					MIN	TYP‡	MAX	MIN	TYP‡	MAX	
V_{IK}		V_{CC} = MIN,	I_I = −18 mA				−1.5			−1.5	V
V_{OH}		V_{CC} = MIN, I_{OH} = −0.4 mA	V_{IH} = 2 V,	V_{IL} = MAX,	2.5	3.4		2.7	3.4		V
V_{OL}		V_{CC} = MIN, I_{OL} = 4 mA	V_{IL} = MAX,	V_{IH} = 2 V,		0.25	0.4		0.25	0.4	V
		V_{CC} = MIN, I_{OL} = 8 mA	V_{IL} = MAX,	V_{IH} = 2 V,					0.35	0.5	
I_I	J or K	V_{CC} = MAX,	V_I = 7 V				0.1			0.1	mA
	$\overline{CLR}$ or $\overline{PRE}$						0.3			0.3	
	CLK						0.4			0.4	
I_{IH}	J or K	V_{CC} = MAX,	V_I = 2.7 V				20			20	μA
	$\overline{CLR}$ or $\overline{PRE}$						60			60	
	CLK						80			80	
I_{IL}	J or K	V_{CC} = MAX,	V_I = 0.4 V				−0.4			−0.4	mA
	All other						−0.8			−0.8	
I_{OS}§		V_{CC} = MAX,	See Note 4		−20		−100	−20		−100	mA
I_{CC} (Total)		V_{CC} = MAX,	See Note 2			4	6		4	6	mA

† For conditions shown as MIN or MAX, use the appropriate value specified under recommended operating conditions.
‡ All typical values are at V_{CC} = 5 V, T_A = 25°C.
§ Not more than one output should be shorted at a time, and the duration of the short circuit should not exceed one second.
NOTE 2: With all outputs open, I_{CC} is measured with the Q and $\overline{Q}$ outputs high in turn. At the time of measurement, the clock input is grounded.
NOTE 4: For certain devices where state commutation can be caused by shorting an output to ground, an equivalent test may be performed with V_O = 2.25 V and 2.125 V for the 54 family and the 74 family, respectively, with the minimum and maximum limits reduced to one half of their stated values.

switching characteristics, V_{CC} = 5 V, T_A = 25°C (see note 3)

PARAMETER	FROM (INPUT)	TO (OUTPUT)	TEST CONDITIONS	MIN	TYP	MAX	UNIT
f_{max}			R_L = 2 kΩ, C_L = 15 pF	30	45		MHz
t_{PLH}	$\overline{PRE}$, $\overline{CLR}$ or CLK	Q or $\overline{Q}$			15	20	ns
t_{PHL}					15	20	ns

NOTE 3: Load circuits and voltage waveforms are shown in Section 1.

TEXAS INSTRUMENTS
POST OFFICE BOX 655012 • DALLAS, TEXAS 75265

DECEMBER 1983—REVISED MARCH 1988

- **Package Options Include Plastic "Small Outline" Packages, Flat Packages, and Plastic and Ceramic DIPs**
- **Dependable Texas Instrument Quality and Reliability**

SN54LS78A . . . J OR W PACKAGE
SN74LS78A . . . D OR N PACKAGE
(TOP VIEW)

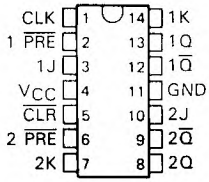

description

The 'LS78A contains two negative-edge-triggered flip-flops with individual J-K, preset inputs, and common clock and common clear inputs. The logic levels at the J and k inputs may be allowed to change while the clock pulse is high and the flip-flop will perform according to the function talbe as long as minimum setup and hold times are observed. The preset and clear are asynchronous active-low inputs. When low they override the clock and data inputs forcing the outputs to the steady-state levels as shown in the function table.

The SN54LS78A is characterized for operation over the full military temperature range of −55°C to 125°C. The SN74LS78A is characterized for operation from 0°C to 70°C.

logic symbol†

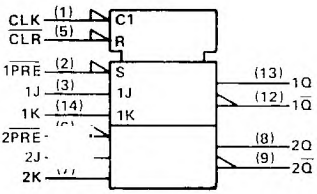

†This symbol is in accordance with ANSI/IEEE Std 91-1984 and IEC Publication 617-12.

FUNCTION TABLE

INPUTS					OUTPUTS	
PRE	CLR	CLK	J	K	Q	Q̄
L	↓	X	X	X	H	L
H	L	X	X	X	L	H
L	L	X	X	X	H‡	H‡
H	H	↓	L	L	Q_0	$\overline{Q}_0$
H	H	↓	H	L	H	L
H	H	↓	L	H	L	H
H	H	↓	H	H	TOGGLE	
H	H	H	X	X	Q_0	$\overline{Q}_0$

‡This configuration is nonstable; that is, it will not persist when preset and clear inputs return to their inactive (high) level.

PRODUCTION DATA documents contain information current as of publication date. Products conform to specifications per the terms of Texas Instruments standard warranty. Production processing does not necessarily include testing of all parameters.

logic diagram (positive logic)

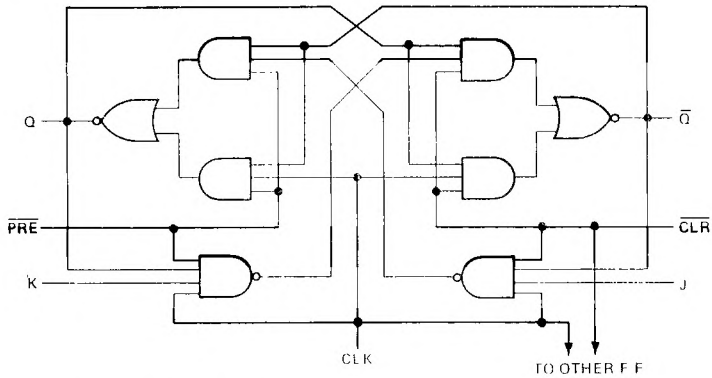

schematics of inputs and outputs (continued)

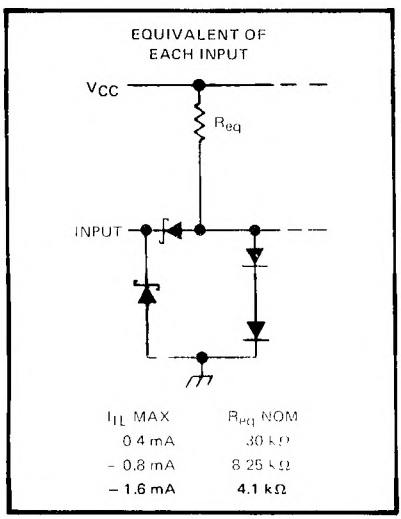

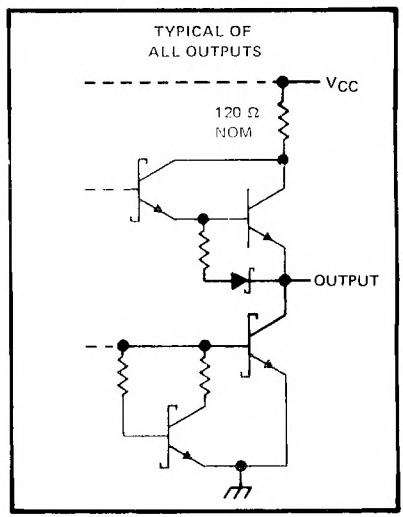

absolute maximum ratings over operating free-air temperature range (unless otherwise noted)

Supply voltage, V_{CC} (see Note 1)		7 V
Input voltage		7 V
Operating free-air temperature range:	SN54LS78A	−55°C to 125°C
	SN74LS78A	0°C to 70°C
Storage temperature range		−65°C to 150°C

NOTE 1: Voltage values are with respect to network ground terminal.

TEXAS INSTRUMENTS
POST OFFICE BOX 655012 • DALLAS, TEXAS 75265

recommended operating conditions

			SN54LS78A			SN74LS78A			UNIT
			MIN	NOM	MAX	MIN	NOM	MAX	
V_{CC}	Supply voltage		4.5	5	5.5	4.75	5	5.75	V
V_{IH}	High-level input voltage		2			2			V
V_{IL}	Low-level input voltage				0.7			0.8	V
I_{OH}	High-level output current				−0.4			−0.4	mA
I_{OL}	Low-level output current				4			8	mA
f_{clock}	Clock frequency		0		30	0		30	MHz
t_w	Pulse duration	CLK high	20			20			ns
		$\overline{PRE}$ or $\overline{CLR}$ low	25			25			
t_{su}	Setup time before CLK↓	data high or low	20			20			ns
		$\overline{PRE}$ or $\overline{CLR}$ inactive	20			20			
t_h	Hold time-data after CLK↓		0			0			ns
T_A	Operating free-air temperature		−55		125	0		70	°C

electrical characteristics over recommended operating free-air temperature range (unless otherwise noted)

PARAMETER		TEST CONDITIONS†			SN54LS78A			SN74LS78A			UNIT
					MIN	TYP‡	MAX	MIN	TYP‡	MAX	
V_{IK}		V_{CC} = MIN,	I_I = −18 mA				−1.5			−1.5	V
V_{OH}		V_{CC} = MIN,	V_{IH} = 2 V,	V_{IL} = 0.7 V, I_{OH} = −0.4 mA	2.5	3.4					V
		V_{CC} = MIN,	V_{IH} = 2 V,	V_{IL} = 0.8 V, I_{OH} = −0.4 mA				2.7	3.4		
V_{OL}		V_{CC} = MIN,	V_{IL} = MAX,	V_{IH} = 2 V, I_{OL} = 4 mA		0.25	0.4		0.25	0.4	V
		V_{CC} = MIN,	V_{IL} = MAX,	V_{IH} = 2 V, I_{OL} = 8 mA					0.35	0.5	
I_I	J or K	V_{CC} = MAX,	V_I = 7 V				0.1			0.1	mA
	$\overline{CLR}$						0.6			0.6	
	$\overline{PRE}$						0.3			0.3	
	CLK						0.8			0.8	
I_{IH}	J or K	V_{CC} = MAX,	V_I = 2.7 V				20			20	μA
	$\overline{CLR}$						120			120	
	$\overline{PRE}$						60			60	
	CLK						160			160	
I_{IL}	J or K	V_{CC} = MAX,	V_I = 0.4 V				−0.4			−0.4	mA
	$\overline{CLR}$						−1.6			−1.6	
	$\overline{PRE}$						−0.8			−0.8	
	CLK						−1.6			−1.6	
I_{OS}§		V_{CC} = MAX,	See Note 4		−20		−100	−20		−100	mA
I_{CC} (Total)		V_{CC} = MAX,	See Note 2			4	6		4	6	mA

† For conditions shown as MIN or MAX, use the appropriate value specified under recommended operating conditions.
‡ All typical values are at V_{CC} = 5 V, T_A = 25°C.
§ Not more than one output should be shorted at a time, and the duration of the short circuit should not exceed one second.
NOTE 2: With all outputs open, I_{CC} is measured with the Q and $\overline{Q}$ outputs high in turn. At the time of measurement, the clock input is grounded.
NOTE 4: For certain devices where state commutation can be caused by shorting an output to ground, an equivalent test may be performed with V_O = 2.25 V and 2.125 V for the 54 family and the 74 family, respectively, with the minimum and maximum limits reduced to one half of their stated values.

switching characteristics, V_{CC} = 5 V, T_A = 25°C (see note 3)

PARAMETER	FROM (INPUT)	TO (OUTPUT)	TEST CONDITIONS	MIN	TYP	MAX	UNIT
f_{max}			R_L = 2 kΩ, C_L = 15 pF	30	45		MHz
t_{PLH}	$\overline{PRE}$, $\overline{CLR}$ or CLK	Q or $\overline{Q}$			15	20	ns
t_{PHL}					15	20	ns

NOTE 3: Load circuits and voltage waveforms are shown in Section 1.

TEXAS INSTRUMENTS
POST OFFICE BOX 655012 • DALLAS, TEXAS 75265

MARCH 1974 – REVISED MARCH 1988

- Full-Carry Look-Ahead across the Four Bits
- Systems Achieve Partial Look-Ahead Performance with the Economy of Ripple Carry
- SN54283/SN74283 and SN54LS283/SN74LS283 Are Recommended For New Designs as They Feature Supply Voltage and Ground on Corner Pins to Simplify Board Layout

TYPE	TYPICAL ADD TIMES: TWO 8-BIT WORDS	TYPICAL ADD TIMES: TWO 16-BIT WORDS	TYPICAL POWER DISSIPATION PER 4-BIT ADDER
'83A	23 ns	43 ns	310 mW
'LS83A	25 ns	45 ns	95 mW

description

These improved full adders perform the addition of two 4-bit binary numbers. The sum (Σ) outputs are provided for each bit and the resultant carry (C4) is obtained from the fourth bit. These adders feature full internal look ahead across all four bits generating the carry term in ten nanoseconds typically. This provides the system designer with partial look-ahead performance at the economy and reduced package count of a ripple-carry implementation.

The adder logic, including the carry, is implemented in its true form meaning that the end-around carry can be accomplished without the need for logic or level inversion.

Designed for medium-speed applications, the circuits utilize transistor-transistor logic that is compatible with most other TTL families and other saturated low-level logic families.

Series 54 and 54LS circuits are characterized for operation over the full military temperature range of −55°C to 125°C, and Series 74 and 74LS circuits are characterized for operation from 0°C to 70°C.

logic symbol†

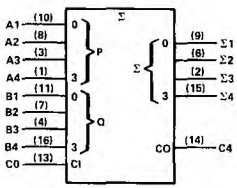

†This symbol is in accordance with ANSI/IEEE Std 91-1984 and IEC Publication 617-12.
Pin numbers are for D, J, N, and W packages.

SN5483A, SN54LS83A . . . J OR W PACKAGE
SN7483A . . . N PACKAGE
SN74LS83A . . . D OR N PACKAGE
(TOP VIEW)

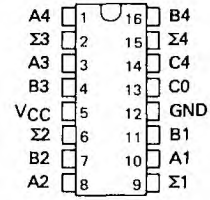

SN54LS83A . . . FK PACKAGE
(TOP VIEW)

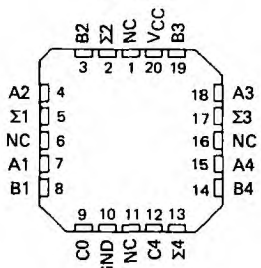

NC - No internal connection

FUNCTION TABLE

INPUT				OUTPUT: WHEN C0 = L			OUTPUT: WHEN C0 = H		
				WHEN C2 = L			WHEN C2 = H		
A1 A3	B1 B3	A2 A4	B2 B4	Σ1 Σ3	Σ2 Σ4	C2 C4	Σ1 Σ3	Σ2 Σ4	C2 C4
L	L	L	L	L	L	L	H	L	L
H	L	L	L	H	L	L	L	H	L
L	H	L	L	H	L	L	L	H	L
H	H	L	L	L	H	L	H	H	L
L	L	H	L	L	H	L	H	H	L
H	L	H	L	H	H	L	L	L	H
L	H	H	L	H	H	L	L	L	H
H	H	H	L	L	L	H	H	L	H
L	L	L	H	L	H	L	H	H	L
H	L	L	H	H	H	L	L	L	H
L	H	L	H	H	H	L	L	L	H
H	H	L	H	L	L	H	H	L	H
L	L	H	H	L	L	H	H	L	H
H	L	H	H	H	L	H	L	H	H
L	H	H	H	H	L	H	L	H	H
H	H	H	H	L	H	H	H	H	H

H = high level, L = low level

NOTE: Input conditions at A1, B1, A2, B2, and C0 are used to determine outputs Σ1 and Σ2 and the value of the internal carry C2. The values at C2, A3, B3, A4, and B4 are then used to determine outputs Σ3, Σ4, and C4.

PRODUCTION DATA documents contain information current as of publication date. Products conform to specifications per the terms of Texas Instruments standard warranty. Production processing does not necessarily include testing of all parameters.

schematics of inputs and outputs

'83A

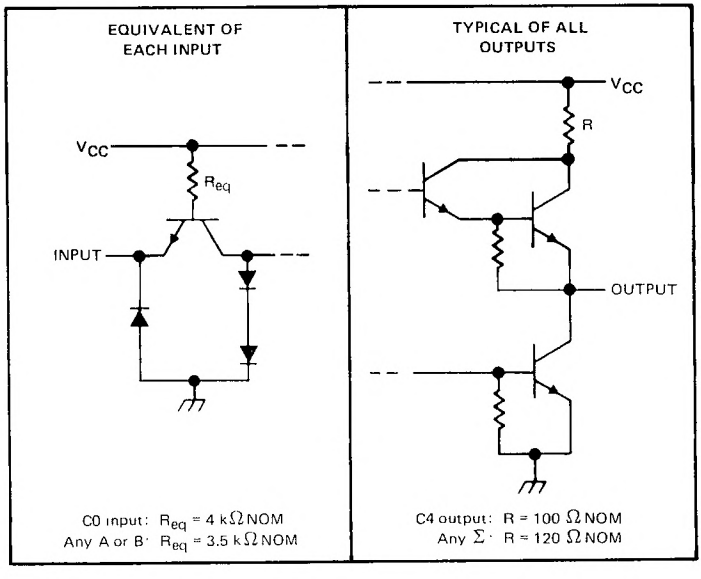

'LS83A

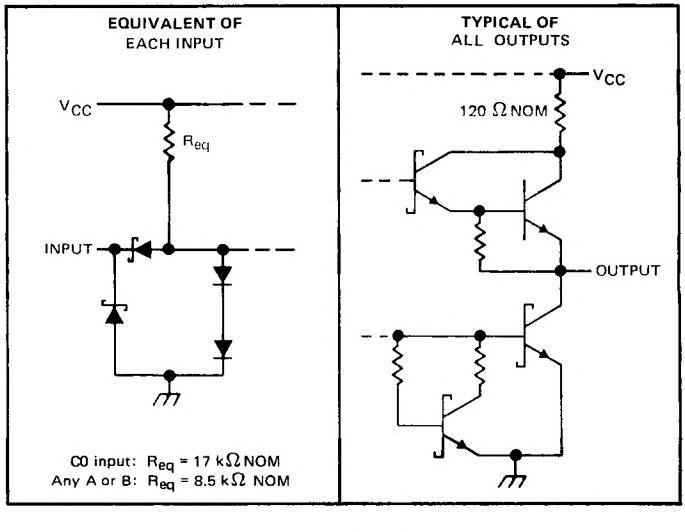

TEXAS INSTRUMENTS
POST OFFICE BOX 655012 • DALLAS, TEXAS 75265

logic diagram (positive logic)

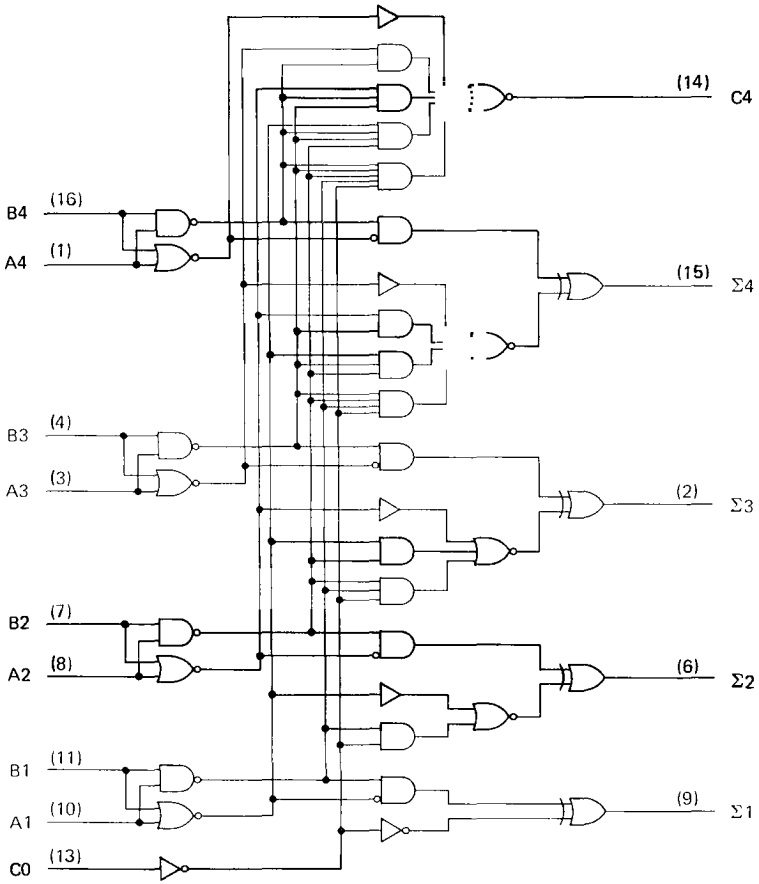

Pin numbers shown are for D, J, N, and W packages.

absolute maximum ratings over operating free-air temperature range (unless otherwise noted)

Supply voltage, V_{CC} (see Note 1)	7 V
Input voltage: '83A	5.5 V
'LS83A	7 V
Interemitter voltage (see Note 2)	5.5 V
Operating free-air temperature range: SN5483A, SN54LS83A	−55°C to 125°C
SN7483A, SN74LS83A	0°C to 70°C
Storage temperature range	−65°C to 150°C

NOTES: 1. Voltage values, except interemitter voltage, are with respect to network ground terminal.
2. This is the voltage between two emitters of a multiple-emitter transistor. This rating applies for the '83A only between the following pairs: A1 and B1, A2 and B2, A3 and B3, A4 and B4.

recommended operating conditions

		SN5483A			SN7483A			UNIT
		MIN	NOM	MAX	MIN	NOM	MAX	
Supply Voltage, V_{CC}		4.5	5	5.5	4.75	5	5.25	V
High-level output current, I_{OH}	Any output except C4			−800			−800	μA
	Output C4			−400			−400	
Low-level output current, I_{OL}	Any output except C4			16			16	mA
	Output C4			8			8	
Operating free-air temperature, T_A		−55		125	0		70	°C

electrical characteristics over recommended operating free-air temperature range (unless otherwise noted)

PARAMETER			TEST CONDITIONS†		SN5483A			SN7483A			UNIT
					MIN	TYP‡	MAX	MIN	TYP‡	MAX	
V_{IH}	High-level input voltage				2			2			V
V_{IL}	Low-level input voltage						0.8			0.8	V
V_{IK}	Input clamp voltage		V_{CC} = MIN, I_I = −12 mA				−1.5			−1.5	V
V_{OH}	High-level output voltage		V_{CC} = MIN, V_{IH} = 2 V, V_{IL} = 0.8 V, I_{OH} = MAX		2.4	3.4		2.4	3.4		V
V_{OL}	Low-level output voltage		V_{CC} = MIN, V_{IH} = 2 V, V_{IL} = 0.8 V, I_{OL} = MAX			0.2	0.4		0.2	0.4	V
I_I	Input current at maximum input voltage		V_{CC} = MAX, V_I = 5.5 V				1			1	mA
I_{IH}	High-level input current		V_{CC} = MAX, V_I = 2.4 V				40			40	μA
I_{IL}	Low-level input current		V_{CC} = MAX, V_I = 0.4 V				−1.6			−1.6	mA
I_{OS}	Short-circuit output current§	Any output except C4	V_{CC} = MAX		−20		−55	−18		−55	mA
		Output C4			−20		−70	−18		−70	
I_{CC}	Supply current		V_{CC} = MAX, Outputs open	All B low, other inputs at 4.5 V		56			56		mA
				All inputs at 4.5 V		66	99		66	110	

† For conditions shown as MIN or MAX, use the appropriate value specified under recommended operating conditions.
‡ All typical values are at V_{CC} = 5 V, T_A = 25°C.
§ Only one output should be shorted at a time.

switching characteristics, V_{CC} = 5 V, T_A = 25°C

PARAMETER¶	FROM (INPUT)	TO (OUTPUT)	TEST CONDITIONS	MIN	TYP	MAX	UNIT
t_{PLH}	C0	Any Σ	C_L = 15 pF, R_L = 400 Ω, See Note 3		14	21	ns
t_{PHL}					12	21	
t_{PLH}	A_i or B_i	Σ_i			16	24	ns
t_{PHL}					16	24	
t_{PLH}	C0	C4	C_L = 15 pF, R_L = 780 Ω, See Note 3		9	14	ns
t_{PHL}					11	16	
t_{PLH}	A_i or B_i	C4			9	14	ns
t_{PHL}					11	16	

¶ t_{PLH} = propagation delay time, low-to-high-level output
t_{PHL} = propagation delay time, high-to-low-level output
NOTE 3: Load circuits and voltage waveforms are shown in Section 1.

TEXAS INSTRUMENTS
POST OFFICE BOX 655012 • DALLAS, TEXAS 75265

recommended operating conditions

	SN54LS83A			SN74LS83A			UNIT
	MIN	NOM	MAX	MIN	NOM	MAX	
Supply voltage, V_{CC}	4.5	5	5.5	4.75	5	5.25	V
High-level output current, I_{OH}			−400			−400	μA
Low-level output current, I_{OL}			4			8	mA
Operating free-air temperature, T_A	−55		125	0		70	°C

electrical characteristics over recommended operating free-air temperature range (unless otherwise noted)

PARAMETER			TEST CONDITIONS†		SN54LS83A			SN74LS83A			UNIT
					MIN	TYP‡	MAX	MIN	TYP‡	MAX	
V_{IH}	High-level input voltage				2			2			V
V_{IL}	Low-level input voltage						0.7			0.8	V
V_{IK}	Input clamp voltage		V_{CC} = MIN, I_I = −18 mA				−1.5			−1.5	V
V_{OH}	High-level output voltage		V_{CC} = MIN, V_{IH} = 2 V, V_{IL} = V_{IL} max, I_{OH} = −400 μA		2.5	3.4		2.7	3.4		V
V_{OL}	Low-level output voltage		V_{CC} = MIN, V_{IH} = 2 V, V_{IL} = V_{IL} max	I_{OL} = 4 mA		0.25	0.4			0.4	V
				I_{OL} = 8 mA						0.5	
I_I	Input current at maximum input voltage	Any A or B	V_{CC} = MAX, V_I = 7 V				0.2			0.2	mA
		C0					0.1			0.1	
I_{IH}	High-level input current	Any A or B	V_{CC} = MAX, V_I = 2.7 V				40			40	μA
		C0					20			20	
I_{IL}	Low-level input current	Any A or B	V_{CC} = MAX, V_I = 0.4 V				−0.8			−0.8	mA
		C0					−0.4			−0.4	
I_{OS}	Short-circuit output current§		V_{CC} = MAX		−20		−100	−20		−100	mA
I_{CC}	Supply current		V_{CC} = MAX, Outputs open	All inputs grounded		22	39		22	39	mA
				All B low, other inputs at 4.5 V		19	34		19	34	
				All inputs at 4.5 V		19	34		19	34	

†For conditions shown as MIN or MAX, use the appropriate value specified under recommended operating conditions.
‡All typical values are at V_{CC} = 5 V, T_A = 25°C.
§Only one output should be shorted at a time, and duration of the short-circuit should not exceed one second.

switching characteristics, V_{CC} = 5 V, T_A = 25°C

PARAMETER¶	FROM (INPUT)	TO (OUTPUT)	TEST CONDITIONS	MIN	TYP	MAX	UNIT
t_{PLH}	C0	Any Σ	C_L = 15 pF, R_L = 2 kΩ, See Note 3		16	24	ns
t_{PHL}					15	24	
t_{PLH}	A_i or B_i	Σ_i			15	24	ns
t_{PHL}					15	24	
t_{PLH}	C0	C4			11	17	ns
t_{PHL}					15	22	
t_{PLH}	A_i or B_i	C4			11	17	ns
t_{PHL}					12	17	

¶t_{PLH} = propagation delay time, low-to-high-level output
t_{PHL} = propagation delay time, high-to-low-level output
NOTE 3: Load circuits and voltage waveforms are shown in Section 1.

TYPE	TYPICAL POWER DISSIPATION	TYPICAL DELAY (4-BIT WORDS)
'85	275 mW	23 ns
'LS85	52 mW	24 ns
'S85	365 mW	11 ns

description

These four-bit magnitude comparators perform comparison of straight binary and straight BCD (8-4-2-1) codes. Three fully decoded decisions about two 4-bit words (A, B) are made and are externally available at three outputs. These devices are fully expandable to any number of bits without external gates. Words of greater length may be compared by connecting comparators in cascade. The A > B, A < B, and A = B outputs of a stage handling less-significant bits are connected to the corresponding A > B, A < B, and A = B inputs of the next stage handling more-significant bits. The stage handling the least-significant bits must have a high-level voltage applied to the A = B input. The cascading paths of the '85, 'LS85, and 'S85 are implemented with only a two-gate-level delay to reduce overall comparison times for long words. An alternate method of cascading which further reduces the comparison time is shown in the typical application data.

SN5485, SN54LS85, SN54S85 . . . J OR W PACKAGE
SN7485 . . . N PACKAGE
SN74LS85, SN74S85 . . . D OR N PACKAGE
(TOP VIEW)

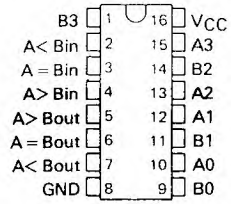

SN54LS85, SN54S85 . . . FK PACKAGE
(TOP VIEW)

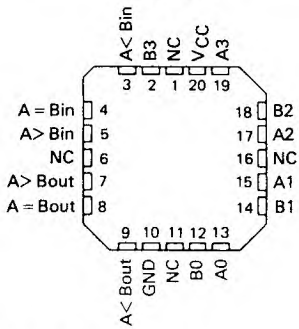

NC - No internal connection

FUNCTION TABLE

COMPARING INPUTS				CASCADING INPUTS			OUTPUTS		
A3, B3	A2, B2	A1, B1	A0, B0	A > B	A < B	A = B	A > B	A < B	A = B
A3 > B3	X	X	X	X	X	X	H	L	L
A3 < B3	X	X	X	X	X	X	L	H	L
A3 = B3	A2 > B2	X	X	X	X	X	H	L	L
A3 = B3	A2 < B2	X	X	X	X	X	L	H	L
A3 = B2	A2 = B2	A1 > B1	X	X	X	X	H	L	L
A3 = B3	A2 = B2	A1 < B1	X	X	X	X	L	H	L
A3 = B3	A2 = B2	A1 = B1	A0 > B0	X	X	X	H	L	L
A3 = B3	A2 = B2	A1 = B1	A0 < B0	X	X	X	L	H	L
A3 = B3	A2 = B2	A1 = B1	A0 = B0	H	L	L	H	L	L
A3 = B3	A2 = B2	A1 = B1	A0 = B0	L	H	L	L	H	L
A3 = B3	A2 = B2	A1 = B1	A0 = B0	X	X	H	L	L	H
A3 = B3	A2 = B2	A1 = B1	A0 = B0	H	H	L	L	L	L
A3 = B3	**A2 = B2**	**A1 = B1**	**A0 = B0**	L	L	L	H	H	L

PRODUCTION DATA documents contain information current as of publication date. Products conform to specifications per the terms of Texas Instruments standard warranty. Production processing does not necessarily include testing of all parameters.

logic diagrams (positive logic)

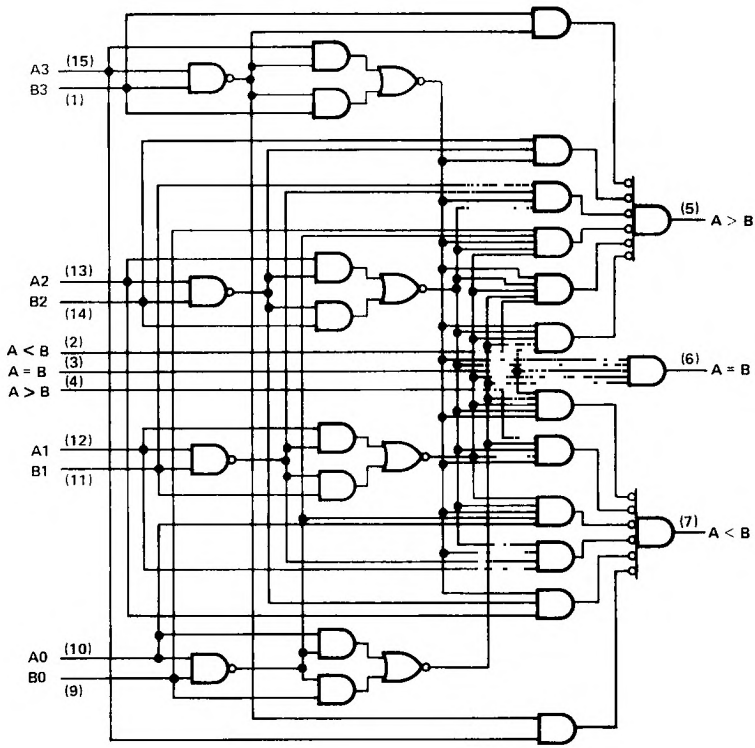

logic symbol†

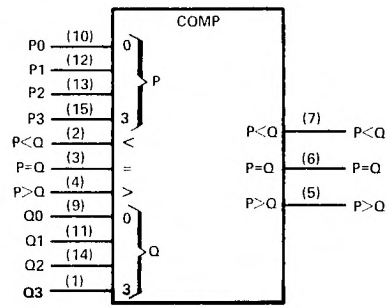

†This symbol is in accordancae with ANSI/IEEE Std 91-1984 and IEC Publication 617-12.
Pin numbers shown are for D, J, N, and W packages.

schematics of inputs and outputs

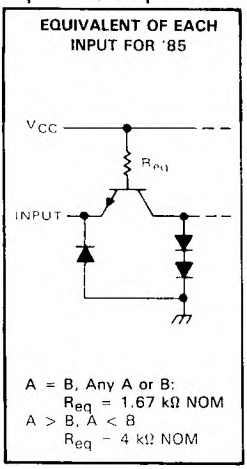

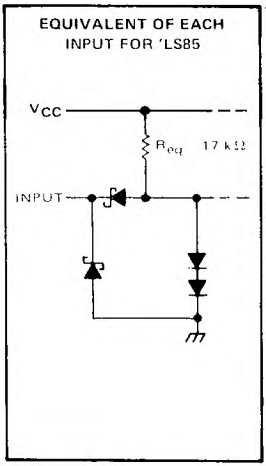

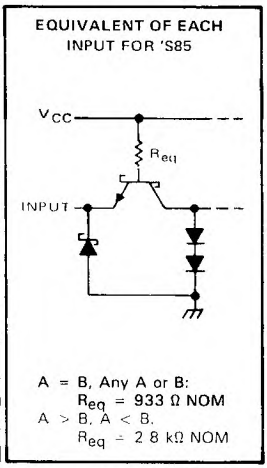

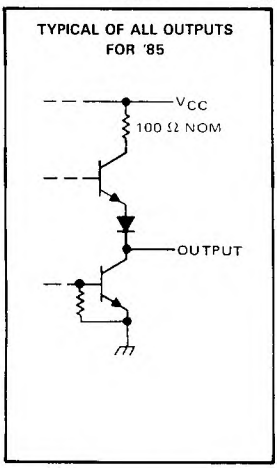

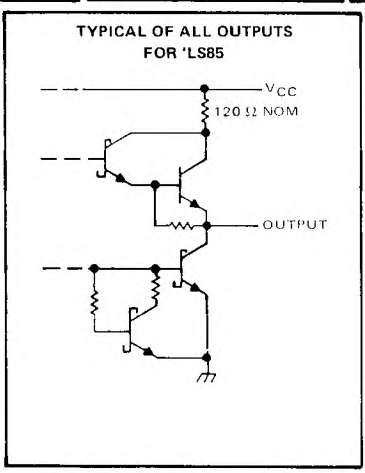

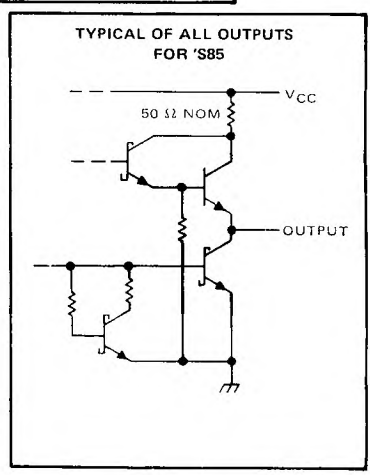

absolute maximum ratings over operating free-air temperature range (unless otherwise noted)

	SN54' SN54S'	SN54LS'	SN74' SN74S'	SN74LS'	UNIT
Supply voltage, V_{CC} (see Note 1)	7	7	7	7	V
Input voltage	5.5	7	5.5	7	V
Interemitter voltage (see Note 2)	5.5		5.5		V
Operating free-air temperature range	−55 to 125		−0 to 70		°C
Storage temperature range	−65 to 150		−65 to 150		°C

NOTES: 1. Voltage values, except interemitter voltage, are with respect to network ground terminal.
2. This is the voltage between two emitters of a multiple-emitter input transistor. This rating applies to each A input in conjunction with its respective B input of the '85 and 'S85.

recommended operating conditions

	SN5485			SN7485			UNIT
	MIN	NOM	MAX	MIN	NOM	MAX	
Supply voltage, V_{CC}	4.5	5	5.5	4.75	5	5.25	V
High-level output current, I_{OH}			−400			−400	μA
Low-level output current, I_{OL}			16			16	mA
Operating free-air temperature, T_A	−55		125	0		70	°C

electrical characteristics over recommended operating free-air temperature range (unless otherwise noted)

PARAMETER			TEST CONDITIONS†			MIN	TYP‡	MAX	UNIT
V_{IH}	High-level input voltage					2			V
V_{IL}	Low-level input voltage							0.8	V
V_{IK}	Input clamp voltage		V_{CC} = MIN,	I_I = −12 mA				−1.5	V
V_{OH}	High-level output voltage		V_{CC} = MIN, V_{IL} = 0.8 V,	V_{IH} = 2 V, I_{OH} = −400 μA		2.4	3.4		V
V_{OL}	Low-level output voltage		V_{CC} = MIN, V_{IL} = 0.8 V,	V_{IH} = 2 V, I_{OL} = 16 mA			0.2	0.4	V
I_I	Input current at maximum input voltage		V_{CC} = MAX,	V_I = 5.5 V				1	mA
I_{IH}	High-level input current	A < B, A > B inputs	V_{CC} = MAX,	V_I = 2.4 V				40	μA
		all other inputs						120	
I_{IL}	Low-level input current	A < B, A > B inputs	V_{CC} = MAX,	V_I = 0.4 V				−1.6	mA
		all other inputs						−4.8	
I_{OS}	Short-circuit output current§		V_{CC} = MAX,	V_O = 0	SN5485	−20		−55	mA
					SN7485	−18		−55	
I_{CC}	Supply current		V_{CC} = MAX, See Note 4				55	88	mA

†For conditions shown as MIN or MAX, use the appropriate value specified under recommended operating conditions.
‡All typical values are at V_{CC} = 5 V, T_A = 25°C.
§Not more than one output should be shorted at a time.
NOTE 4: I_{CC} is measured with outputs open, A = B grounded, and all other inputs at 4.5 V.

switching characteristics, V_{CC} = 5 V, T_A = 25°C

PARAMETER¶	FROM INPUT	TO OUTPUT	NUMBER OF GATE LEVELS	TEST CONDITIONS	MIN	TYP	MAX	UNIT
t_{PLH}	Any A or B data input	A < B, A > B	1	C_L = 15 pF, R_L = 400 Ω, See Note 5		7		ns
			2			12		
			3			17	26	
		A = B	4			23	35	
t_{PHL}	Any A or B data input	A < B, A > B	1			11		ns
			2			15		
			3			20	30	
		A = B	4			20	30	
t_{PLH}	A < B or A = B	A > B	1			7	11	ns
t_{PHL}	A < B or A = B	A > B	1			11	17	ns
t_{PLH}	A = B	A = B	2			13	20	ns
t_{PHL}	A = B	A = B	2			11	17	ns
t_{PLH}	A > B or A = B	A < B	1			7	11	ns
t_{PHL}	A > B or A = B	A < B	1			11	17	ns

¶t_{PLH} = propagation delay time, low-to-high-level output
t_{PHL} = propagation delay time, high-to-low-level output
NOTE 5: Load circuits and voltage waveforms are shown in Section 1.

TEXAS INSTRUMENTS
POST OFFICE BOX 655012 • DALLAS, TEXAS 75265

recommended operating conditions

	SN54LS85			SN74LS85			UNIT
	MIN	NOM	MAX	MIN	NOM	MAX	
Supply voltage, V_{CC}	4.5	5	5.5	4.75	5	5.25	V
High-level output current, I_{OH}			−400			−400	μA
Low-level output current, I_{OL}			4			8	mA
Operating free-air temperature, T_A	−55		125	0		70	°C

electrical characteristics over recommended operating free-air temperature range (unless otherwise noted)

PARAMETER			TEST CONDITIONS†		SN54LS85			SN74LS85			UNIT
					MIN	TYP‡	MAX	MIN	TYP‡	MAX	
V_{IH}	High-level input voltage				2			2			V
V_{IL}	Low-level input voltage						0.7			0.7	V
V_{IK}	Input clamp voltage		V_{CC} = MIN,	I_I = −18 mA			−1.5			−1.5	V
V_{OH}	High-level output voltage		V_{CC} = MIN, V_{IL} = V_{IL} max,	V_{IH} = 2 V, I_{OH} = −400 μA	2.5	3.4		2.7	3.4		V
V_{OL}	Low-level output voltage		V_{CC} = MIN, V_{IH} = 2 V, V_{IL} = V_{IL} max	I_{OL} = 4 mA		0.25	0.4		0.25	0.4	V
				I_{OL} = 8 mA					0.35	0.5	
I_I	Input current at maximum input voltage	A < B, A > B inputs	V_{CC} = MAX,	V_I = 7 V			0.1			0.1	mA
		all other inputs					0.3			0.3	
I_{IH}	High-level input current	A < B, A > B inputs	V_{CC} = MAX,	V_I = 2.7 V			20			20	μA
		all other inputs					60			60	
I_{IL}	Low-level input current	A < B, A > B inputs	V_{CC} = MAX,	V_I = 0.4 V			−0.4			−0.4	mA
		all other inputs					−1.2			−1.2	
I_{OS}	Short-circuit output current§		V_{CC} = MAX		−20		−100	−20		−100	mA
I_{CC}	Supply current		V_{CC} = MAX,	See Note 4		10.4	20		10.4	20	mA

†For conditions shown as MIN or MAX, use the appropriate value specified under recommended operating conditions.
‡All typical values are at V_{CC} = 5 V, T_A = 25°C.
§Not more than one output should be shorted at a time, and duration of the short-circuit should not exceed one second.
NOTE 4: I_{CC} is measured with outputs open, A = B grounded, and all other inputs at 4.5 V.

switching characteristics, V_{CC} = 5 V, T_A = 25°C

PARAMETER¶	FROM INPUT	TO OUTPUT	NUMBER OF GATE LEVELS	TEST CONDITIONS	MIN	TYP	MAX	UNIT
t_{PLH}	Any A or B data input	A < B, A > B	1	C_L = 15 pF, R_L = 2 kΩ, See Note 5		14		ns
			2			19		
			3			24	36	
		A = B	4			27	45	
t_{PHL}	Any A or B data input	A < B, A > B	1			11		ns
			2			15		
			3			20	30	
		A = B	4			23	45	
t_{PLH}	A < B or A = B	A > B	1			14	22	ns
t_{PHL}	A < B or A = B	A > B	1			11	17	ns
t_{PLH}	A = B	A = B	2			13	20	ns
t_{PHL}	A = B	A = B	2			13	26	ns
t_{PLH}	A > B or A = B	A < B	1			14	22	ns
t_{PHL}	A > B or A = B	A < B	1			11	17	ns

¶t_{PLH} = propagation delay time, low-to-high-level output
t_{PHL} = propagation delay time, high-to-low-level output
NOTE 5: Load circuits and voltage waveforms are shown in Section 1.

recommended operating conditions

	SN54S85			SN74S85			UNIT
	MIN	NOM	MAX	MIN	NOM	MAX	
Supply voltage, V_{CC}	4.5	5	5.5	4.75	5	5.25	V
High-level output current, I_{OH}			−1			−1	mA
Low-level output current, I_{OL}			20			20	mA
Operating free-air temperature, T_A	−55		125	0		70	°C

electrical characteristics over recommended operating free-air temperature range (unless otherwise noted)

PARAMETER			TEST CONDITIONS†		MIN	TYP‡	MAX	UNIT
V_{IH}	High-level input voltage				2			V
V_{IL}	Low-level input voltage						0.8	V
V_{IK}	Input clamp voltage		V_{CC} = MIN, I_I = −18 mA				−1.2	V
V_{OH}	High-level output voltage		V_{CC} = MIN, V_{IH} = 2 V, V_{IL} = 0.8 V, I_{OH} = −1 mA	SN54S85	2.5	3.4		V
				SN74S85	2.7	3.4		
V_{OL}	Low-level output voltage		V_{CC} = MIN, V_{IH} = 2 V, V_{IL} = 0.8 V, I_{OL} = 20 mA				0.5	V
I_I	Input current at maximum input voltage		V_{CC} = MAX, V_I = 5.5 V				1	mA
I_{IH}	High-level input current	A < B, A > B inputs	V_{CC} = MAX, V_I = 2.7 V				50	μA
		all other inputs					150	
I_{IL}	Low-level input current	A < B, A > B inputs	V_{CC} = MAX, V_I = 0.5 V				−2	mA
		all other inputs					−6	
I_{OS}	Short-circuit output current§		V_{CC} = MAX		−40		−100	mA
I_{CC}	Supply current		V_{CC} = MAX, See Note 4			73	115	mA
			V_{CC} = MAX, T_A = 125°C, See Note 4	SN54S85W			110	

†For conditions shown as MIN or MAX, use the appropriate value specified under recommended operating conditions.
‡All typical values are at V_{CC} = 5 V, T_A = 25°C.
§Not more than one output should be shorted at a time, and duration of the short-circuit should not exceed one second.
NOTE 4: I_{CC} is measured with outputs open, A = B grounded, and all other inputs at 4.5 V.

switching characteristics, V_{CC} = 5 V, T_A = 25°C

PARAMETER¶	FROM INPUT	TO OUTPUT	NUMBER OF GATE LEVELS	TEST CONDITIONS	MIN	TYP	MAX	UNIT
t_{PLH}	Any A or B data input	A < B, A > B	1	C_L = 15 pF, R_L = 280 Ω, See Note 5		5		ns
			2			7.5		
			3			10.5	16	
		A = B	4			12	18	
t_{PHL}	Any A or B data input	A < B, A > B	1			5.5		ns
			2			7		
			3			11	16.5	
		A = B	4			11	16.5	
t_{PLH}	A < B or A = B	A > B	1			5	7.5	ns
t_{PHL}	A < B or A = B	A > B	1			5.5	8.5	ns
t_{PLH}	A = B	A = B	2			7	10.5	ns
t_{PHL}	A = B	A = B	2			5	7.5	ns
t_{PLH}	A > B or A = B	A < B	1			5	7.5	ns
t_{PHL}	A > B or A = B	A < B	1			5.5	8.5	ns

¶t_{PLH} = propagation delay time, low-to-high-level output
t_{PHL} = propagation delay time, high-to-low-level output
NOTE 5: Load circuits and voltage waveforms are shown in Section 1.

TEXAS INSTRUMENTS
POST OFFICE BOX 655012 • DALLAS, TEXAS 75265

TYPICAL APPLICATION DATA

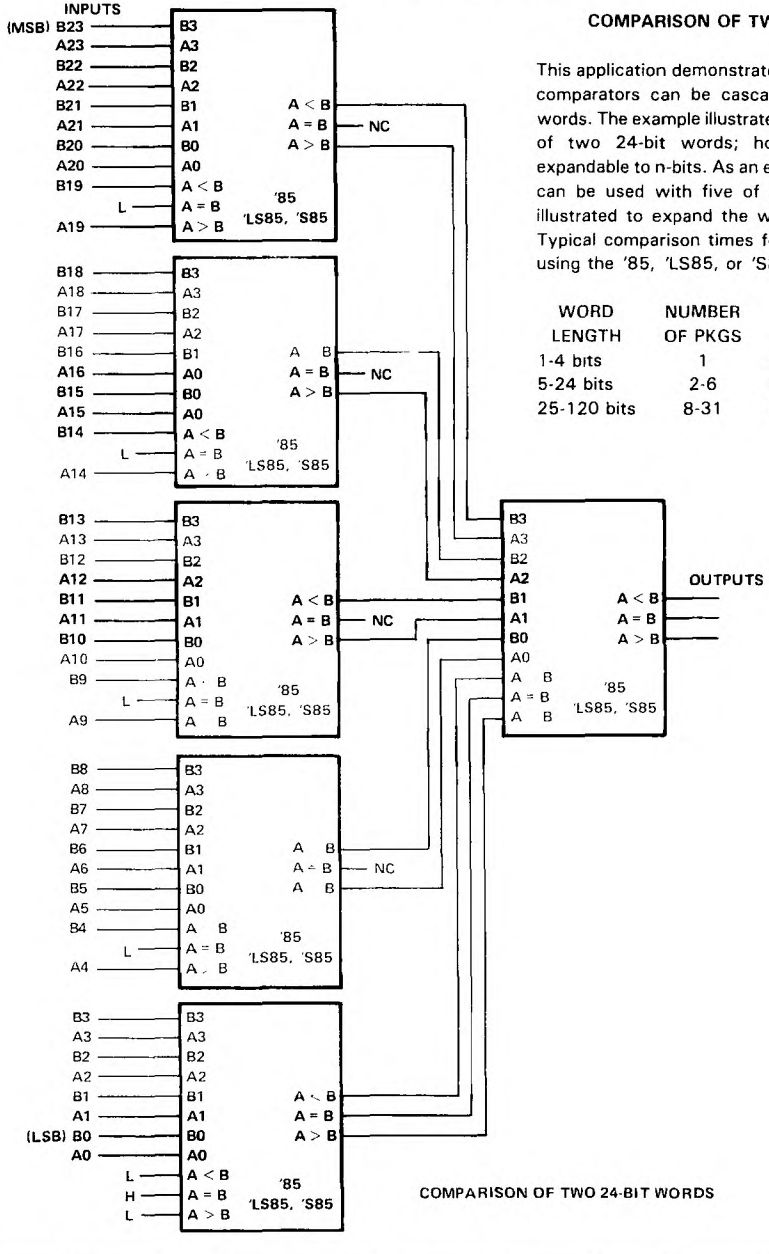

COMPARISON OF TWO 24-BIT WORDS

COMPARISON OF TWO N-BIT WORDS

This application demonstrates how these magnitude comparators can be cascaded to compare longer words. The example illustrated shows the comparison of two 24-bit words; however, the design is expandable to n-bits. As an example, one comparator can be used with five of the 24-bit comparators illustrated to expand the word length to 120-bits. Typical comparison times for various word lengths using the '85, 'LS85, or 'S85 are:

WORD LENGTH	NUMBER OF PKGS	'85	'LS85	'S85
1-4 bits	1	23 ns	24 ns	11 ns
5-24 bits	2-6	46 ns	48 ns	22 ns
25-120 bits	8-31	69 ns	72 ns	33 ns

- Package Options Include Plastic "Small Outline" Packages, Ceramic Chip Carriers and Flat Packages, and Standard Plastic and Ceramic 300-mil DIPs
- Dependable Texas Instruments Quality and Reliability

TYPE	TYPICAL AVERAGE PROPAGATION DELAY TIME	TYPICAL TOTAL POWER DISSIPATION
'86	14 ns	150 mW
'LS86A	10 ns	30.5 mW
'S86	7 ns	250 mW

SN5486, SN54LS86A, SN54S86 . . . J OR W PACKAGE
SN7486 . . . N PACKAGE
SN74LS86A, SN74S86 . . . D OR N PACKAGE
(TOP VIEW)

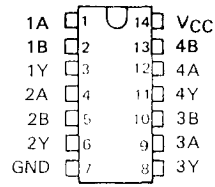

SN54LS86A, SN54S86 . . . FK PACKAGE
(TOP VIEW)

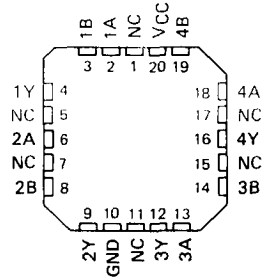

NC - No internal connection

description

These devices contain four independent 2-input Exclusive-OR gates. They perform the Boolean functions $Y = A \oplus B = \overline{A}B + A\overline{B}$ in positive logic.

A common application is as a true/complement element. If one of the inputs is low, the other input will be reproduced in true form at the output. If one of the inputs is high, the signal on the other input will be reproduced inverted at the output.

The SN5486, 54LS86A, and the SN54S86 are characterized for operation over the full military temperature range of −55°C to 125°C. The SN7486, SN74LS86A, and the SN74S86 are characterized for operation from 0°C to 70°C.

exclusive-OR logic

An exclusive-OR gate has many applications, some of which can be represented better by alternative logic symbols.

EXCLUSIVE-OR

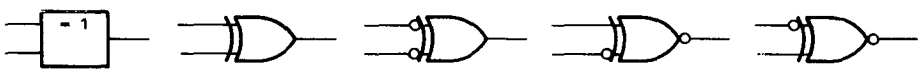

These are five equivalent Exclusive-OR symbols valid for an '86 or 'LS86A gate in positive logic; negation may be shown at any two ports.

LOGIC IDENTITY ELEMENT

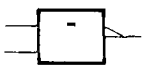

The output is active (low) if all inputs stand at the same logic level (i.e., A = B).

EVEN-PARITY

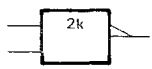

The output is active (low) if an even number of inputs (i.e., 0 or 2) are active.

ODD-PARITY ELEMENT

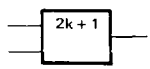

The output is active (high) if an odd number of inputs (i.e., only 1 of the 2) are active.

PRODUCTION DATA documents contain information current as of publication date. Products conform to specifications per the terms of Texas Instruments standard warranty. Production processing does not necessarily include testing of all parameters.

schematics of inputs and outputs

'86

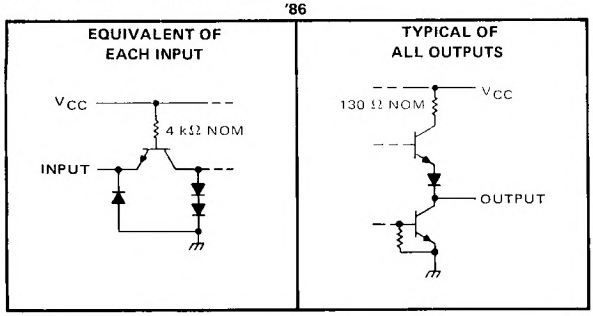

'LS86A

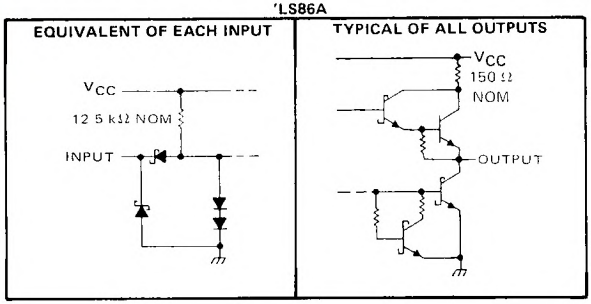

'S86

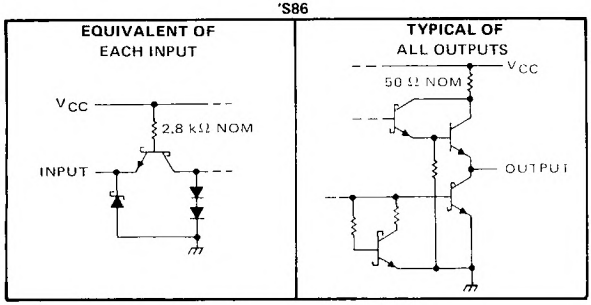

logic symbol†

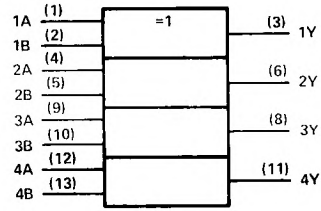

†This symbol is in accordance with ANSI/IEEE Std. 91-1984 and IEC Publication 617-12. Pin numbers shown are for D, J, N, and W packages.

FUNCTION TABLE

INPUTS		OUTPUT
A	B	Y
L	L	L
L	H	H
H	L	H
H	H	L

H = high level, L = low level

TEXAS INSTRUMENTS
POST OFFICE BOX 655012 • DALLAS, TEXAS 75265

absolute maximum ratings over operating free-air temperature range (unless otherwise noted)

Supply voltage, V_{CC} (see Note 1) . . . . . 7 V
Input voltage . . . . . 5.5 V
Operating free-air temperature range: SN5486 . . . . . −55°C to 125°C
SN7486 . . . . . 0°C to 70°C
Storage temperature range . . . . . −65°C to 150°C

NOTE 1: Voltage values are with respect to network ground terminal.

recommended operating conditions

	SN5486			SN7486			UNIT
	MIN	NOM	MAX	MIN	NOM	MAX	
Supply voltage, V_{CC}	4.5	5	5.5	4.75	5	5.25	V
High-level output current, I_{OH}			−800			−800	μA
Low-level output current, I_{OL}			16			16	mA
Operating free-air temperature, T_A	−55		125	0		70	°C

electrical characteristics over recommended operating free-air temperature range (unless otherwise noted)

PARAMETER		TEST CONDITIONS†	SN5486			SN7486			UNIT
			MIN	TYP‡	MAX	MIN	TYP‡	MAX	
V_{IH}	High-level input voltage		2			2			V
V_{IL}	Low-level input voltage				0.8			0.8	V
V_{IK}	Input clamp voltage	V_{CC} = MIN, I_I = −8 mA			−1.5			−1.5	V
V_{OH}	High-level output voltage	V_{CC} = MIN, V_{IH} = 2 V, V_{IL} = 0.8 V, I_{OH} = −800 μA	2.4	3.4		2.4	3.4		V
V_{OL}	Low-level output voltage	V_{CC} = MIN, V_{IH} = 2 V, V_{IL} = 0.8 V, I_{OL} = 16 mA		0.2	0.4		0.2	0.4	V
I_I	Input current at maximum input voltage	V_{CC} = MAX, V_I = 5.5 V			1			1	mA
I_{IH}	High-level input current	V_{CC} = MAX, V_I = 2.4 V			40			40	μA
I_{IL}	Low-level input current	V_{CC} = MAX, V_I = 0.4 V			−1.6			−1.6	mA
I_{OS}	Short-circuit output current§	V_{CC} = MAX	−20		−55	−18		−55	mA
I_{CC}	Supply current	V_{CC} = MAX, See Note 2		30	43		30	50	mA

†For conditions shown as MIN or MAX, use the appropriate value specified under recommended operating conditions for the applicable type.
‡All typical values are at V_{CC} = 5 V, T_A = 25°C.
§Not more than one output should be shorted at a time.
NOTE 2: I_{CC} is measured with the inputs grounded and the outputs open.

switching characteristics, V_{CC} = 5 V, T_A = 25°C

PARAMETER¶	FROM (INPUT)	TEST CONDITIONS		MIN	TYP	MAX	UNIT
t_{PLH}	A or B	Other input low	C_L = 15 pF, R_L = 400 Ω, See Note 3		15	23	ns
t_{PHL}					11	17	
t_{PLH}	A or B	Other input high			18	30	ns
t_{PHL}					13	22	

¶t_{PLH} = propagation delay time, low-to-high-level output
t_{PHL} = propagation delay time, high-to-low-level output
NOTE 3: Load circuits and voltage waveforms are shown in Section 1.

absolute maximum ratings over operating free-air temperature range (unless otherwise noted)

Supply voltage, V_{CC} (see Note 1) . . . . . 7 V
Input voltage . . . . . 7 V
Operating free-air temperature range: SN54LS86A . . . . . −55°C to 125°C
SN74LS86A . . . . . 0°C to 70°C
Storage temperature range . . . . . −65°C to 150°C

NOTE 1: Voltage values are with respect to network ground terminal.

recommended operating conditions

	SN54LS86A			SN74LS86A			UNIT
	MIN	NOM	MAX	MIN	NOM	MAX	
Supply voltage, V_{CC}	4.5	5	5.5	4.75	5	5.25	V
High-level output current, I_{OH}			−400			−400	μA
Low-level output current, I_{OL}			4			8	mA
Operating free-air temperature, T_A	−55		125	0		70	°C

electrical characteristics over recommended operating free-air temperature range (unless otherwise noted)

PARAMETER		TEST CONDITIONS†		SN54LS86A MIN	TYP‡	MAX	SN74LS86A MIN	TYP‡	MAX	UNIT
V_{IH}	High-level input voltage			2			2			V
V_{IL}	Low-level input voltage					0.7			0.8	V
V_{IK}	Input clamp voltage	V_{CC} = MIN,	I_I = −18 mA			−1.5			−1.5	V
V_{OH}	High-level output voltage	V_{CC} = MIN, V_{IH} = 2 V, V_{IL} = V_{IL} max,	I_{OH} = −400 μA	2.5	3.4		2.7	3.4		V
V_{OL}	Low-level output voltage	V_{CC} = MIN, V_{IH} = 2 V, V_{IL} = V_{IL} max	I_{OL} = 4 mA		0.25	0.4		0.25	0.4	V
			I_{OL} = 8 mA					0.35	0.5	
I_I	Input current at maximum input voltage	V_{CC} = MAX,	V_I = 7 V			0.2			0.2	mA
I_{IH}	High-level input current	V_{CC} = MAX,	V_I = 2.7 V			40			40	μA
I_{IL}	Low-level input current	V_{CC} = MAX,	V_I = 0.4 V			−0.8			−0.8	mA
I_{OS}	Short-circuit output current§	V_{CC} = MAX		−20		−100	−20		−100	mA
I_{CC}	Supply current	V_{CC} = MAX,	See Note 2		6.1	10		6.1	10	mA

†For conditions shown as MIN or MAX, use the appropriate value specified under recommended operating conditions for the applicable type.
‡All typical values are at V_{CC} = 5 V, T_A = 25°C
§Not more than one output should be shorted at a time.
NOTE 2: I_{CC} is measured with the inputs grounded and the outputs open.

switching characteristics, V_{CC} = 5 V, T_A = 25°C

PARAMETER¶	FROM (INPUT)	TEST CONDITIONS		MIN	TYP	MAX	UNIT
t_{PLH}	A or B	Other input low	C_L = 15 pF, R_L = 2 kΩ, See Note 3		12	23	ns
t_{PHL}					10	17	
t_{PLH}	A or B	Other input high			20	30	ns
t_{PHL}					13	22	

¶t_{PLH} = propagation delay time, low-to-high-level output
t_{PHL} = propagation delay time, high-to-low-level output
NOTE 3: Load circuits and voltage waveforms are shown in Section 1.

TEXAS INSTRUMENTS
POST OFFICE BOX 655012 • DALLAS, TEXAS 75265

absolute maximum ratings over operating free-air temperature range (unless otherwise noted)

Supply voltage, V_{CC} (see Note 1) . . . . . 7 V
Input voltage . . . . . 5.5 V
Operating free-air temperature range: SN54S86 . . . . . −55°C to 125°C
SN74S86 . . . . . 0°C to 70°C
Storage temperature range . . . . . −65°C to 150°C

NOTE 1: Voltage values are with respect to network ground terminal

recommended operating conditions

	SN54S86			SN74S86			UNIT
	MIN	NOM	MAX	MIN	NOM	MAX	
Supply voltage, V_{CC}	4.5	5	5.5	4.75	5	5.25	V
High-level output current, I_{OH}			−1			−1	mA
Low-level output current, I_{OL}			20			20	mA
Operating free-air temperature, T_A	−55		125	0		70	°C

electrical characteristics over recommended operating free-air temperature range (unless otherwise noted)

PARAMETER		TEST CONDITIONS†	SN54S86			SN74S86			UNIT
			MIN	TYP‡	MAX	MIN	TYP‡	MAX	
V_{IH}	High-level input voltage		2			2			V
V_{IL}	Low-level input voltage				0.8			0.8	V
V_{IK}	Input clamp voltage	V_{CC} = MIN, I_I = −18 mA			−1.2			−1.2	V
V_{OH}	High-level output voltage	V_{CC} = MIN, V_{IH} = 2 V, V_{IL} = 0.8 V, I_{OH} = −1 mA	2.5	3.4		2.7	3.4		V
V_{OL}	Low-level output voltage	V_{CC} = MIN, V_{IH} = 2 V, V_{IL} = 0.8 V, I_{OL} = 20 mA			0.5			0.5	V
I_I	Input current at maximum input voltage	V_{CC} = MAX, V_I = 5.5 V			1			1	mA
I_{IH}	High-level input current	V_{CC} = MAX, V_I = 2.7 V			50			50	μA
I_{IL}	Low-level input current	V_{CC} = MAX, V_I = 0.5 V			−2			−2	mA
I_{OS}	Short-circuit output current§	V_{CC} = MAX	−40		−100	−40		−100	mA
I_{CC}	Supply current	V_{CC} = MAX, See Note 2		50	75		50	75	mA

†For conditions shown as MIN or MAX, use the appropriate value specified under recommended operating conditions for the applicable type.
‡All typical values are at V_{CC} = 5 V, T_A = 25°C
§Not more than one output should be shorted at a time, and duration of the short-circuit should not exceed one second.
NOTE 2: I_{CC} is measured with the inputs grounded and the outputs open.

switching characteristics, V_{CC} = 5 V, T_A = 25°C

PARAMETER¶	FROM (INPUT)	TEST CONDITIONS		MIN	TYP	MAX	UNIT
t_{PLH}	A or B	Other input low	C_L = 15 pF, R_L = 280 Ω, See Note 3		7	10.5	ns
t_{PHL}					6.5	10	
t_{PLH}	A or B	Other input high			7	10.5	ns
t_{PHL}					6.5	10	

¶t_{PLH} = propagation delay time, low-to-high-level output
t_{PHL} = propagation delay time, high-to-low-level output
NOTE 3: Load circuits and voltage waveforms are shown in Section 1.

'90A, 'LS90 . . . Decade Counters

'92A, 'LS92 . . . Divide By-Twelve Counters

'93A, 'LS93 . . . 4-Bit Binary Counters

TYPES	TYPICAL POWER DISSIPATION
'90A	145 mW
'92A, '93A	130 mW
'LS90, 'LS92, 'LS93	45 mW

description

Each of these monolithic counters contains four master-slave flip-flops and additional gating to provide a divide-by-two counter and a three-stage binary counter for which the count cycle length is divide-by-five for the '90A and 'LS90, divide-by-six for the '92A and 'LS92, and the divide-by-eight for the '93A and 'LS93.

All of these counters have a gated zero reset and the '90A and 'LS90 also have gated set-to-nine inputs for use in BCD nine's complement applications.

To use their maximum count length (decade, divide-by-twelve, or four-bit binary) of these counters, the CKB input is connected to the Q_A output. The input count pulses are applied to CKA input and the outputs are as described in the appropriate function table. A symmetrical divide-by-ten count can be obtained from the '90A or 'LS90 counters by connecting the Q_D output to the CKA input and applying the input count to the CKB input which gives a divide-by-ten square wave at output Q_A.

SN5490A, SN54LS90 . . . J OR W PACKAGE
SN7490A . . . N PACKAGE
SN74LS90 . . . D OR N PACKAGE
(TOP VIEW)

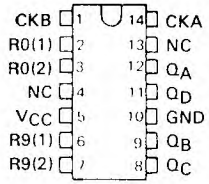

SN5492A, SN54LS92 . . . J OR W PACKAGE
SN7492A . . . N PACKAGE
SN74LS92 . . . D OR N PACKAGE
(TOP VIEW)

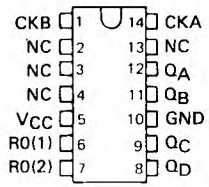

SN5493A, SN54LS93 . . . J OR W PACKAGE
SN7493 . . . N PACKAGE
SN74LS93 . . . D OR N PACKAGE
(TOP VIEW)

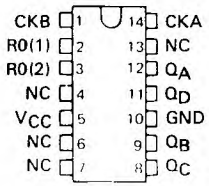

NC—No internal connection

PRODUCTION DATA documents contain information current as of publication date. Products conform to specifications per the terms of Texas Instruments standard warranty. Production processing does not necessarily include testing of all parameters.

logic symbols†

'90

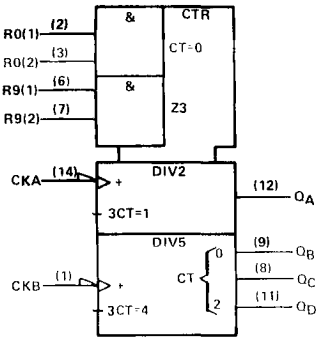

'92

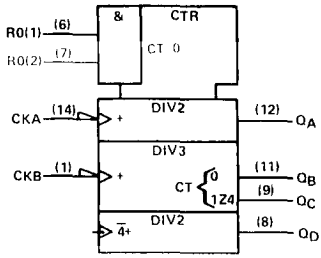

'93A, 'LS93

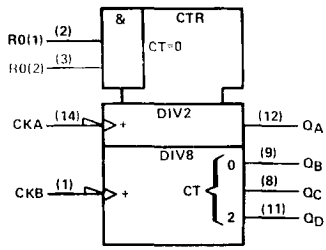

†These symbols are in accordance with ANSI/IEEE Std. 91-1984 and IEC Publication 617-12.

TEXAS INSTRUMENTS
POST OFFICE BOX 655012 • DALLAS, TEXAS 75265

'90A, 'LS90
BCD COUNT SEQUENCE
(See Note A)

COUNT	OUTPUT			
	Q_D	Q_C	Q_B	Q_A
0	L	L	L	L
1	L	L	L	H
2	L	L	H	L
3	L	L	H	H
4	L	H	L	L
5	L	H	L	H
6	L	H	H	L
7	L	H	H	H
8	H	L	L	L
9	H	L	L	H

'90A, 'LS90
BI-QUINARY (5-2)
(See Note B)

COUNT	OUTPUT			
	Q_A	Q_D	Q_C	Q_B
0	L	L	L	L
1	L	L	L	H
2	L	L	H	L
3	L	L	H	H
4	L	H	L	L
5	H	L	L	L
6	H	L	L	H
7	H	L	H	L
8	H	L	H	H
9	H	H	L	L

'92A, 'LS92
COUNT SEQUENCE
(See Note C)

COUNT	OUTPUT			
	Q_D	Q_C	Q_B	Q_A
0	L	L	L	L
1	L	L	L	H
2	L	L	H	L
3	L	L	H	H
4	L	H	L	L
5	L	H	L	H
6	H	L	L	L
7	H	L	L	H
8	H	L	H	L
9	H	L	H	H
10	H	H	L	L
11	H	H	L	H

'90A, 'LS90
RESET/COUNT FUNCTION TABLE

RESET INPUTS				OUTPUT			
$R_{0(1)}$	$R_{0(2)}$	$R_{9(1)}$	$R_{9(2)}$	Q_D	Q_C	Q_B	Q_A
H	H	L	X	L	L	L	L
H	H	X	L	L	L	L	L
X	X	H	H	H	L	L	H
X	L	X	L	COUNT			
L	X	L	X	COUNT			
L	X	X	L	COUNT			
X	L	L	X	COUNT			

'92A, 'LS92, '93A, 'LS93
RESET/COUNT FUNCTION TABLE

RESET INPUTS		OUTPUT			
$R_{0(1)}$	$R_{0(2)}$	Q_D	Q_C	Q_B	Q_A
H	H	L	L	L	L
L	X	COUNT			
X	L	COUNT			

'93A, 'LS93
COUNT SEQUENCE
(See Note C)

COUNT	OUTPUT			
	Q_D	Q_C	Q_B	Q_A
0	L	L	L	L
1	L	L	L	H
2	L	L	H	L
3	L	L	H	H
4	L	H	L	L
5	L	H	L	H
6	L	H	H	L
7	L	H	H	H
8	H	L	L	L
9	H	L	L	H
10	H	L	H	L
11	H	L	H	H
12	H	H	L	L
13	H	H	L	H
14	H	H	H	L
15	H	H	H	H

NOTES: A. Output Q_A is connected to input CKB for BCD count.
B. Output Q_D is connected to input CKA for bi-quinary count.
C. Output Q_A is connected to input CKB.
D. H = high level, L = low level, X = irrelevant

logic diagrams (positive logic)

'90A, 'LS90

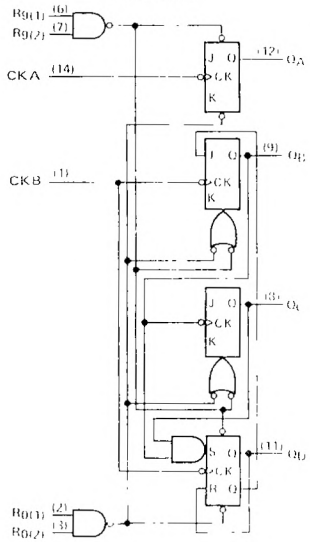

'92A, 'LS92

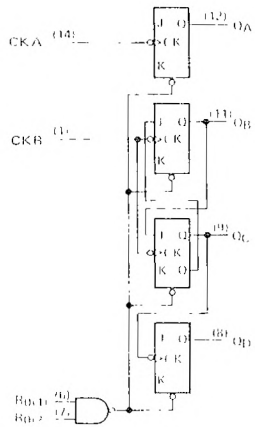

'93A, 'LS93

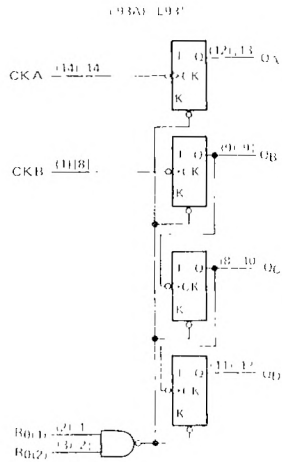

The J and K inputs shown without connection are for reference only and are functionally at a high level.
Pin numbers shown in ( ) are for the 'LS93 and '93A and pin numbers shown in [ ] are for the 54L93.

schematics of inputs and outputs

'90A, '92A, '93A

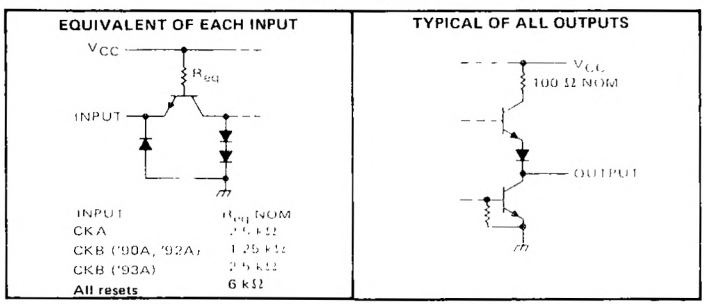

INPUT	R_{eq} NOM
CKA	2.5 kΩ
CKB ('90A, '92A)	1.25 kΩ
CKB ('93A)	2.5 kΩ
All resets	6 kΩ

TEXAS INSTRUMENTS
POST OFFICE BOX 655012 • DALLAS, TEXAS 75265

schematics of inputs and outputs (continued)

'LS90, 'LS92, 'LS93

EQUIVALENT OF EACH RESET INPUT

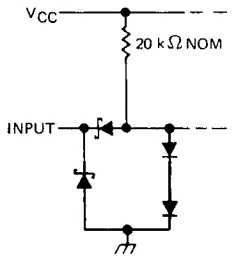

EQUIVALENT OF A AND B INPUTS

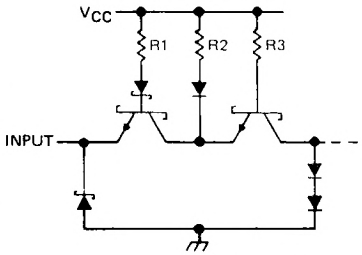

INPUT	NOMINAL VALUES R1	R2	R3
CKA	10 kΩ	10 kΩ	10 kΩ
CKB ('LS90, 'LS92)	6.7 kΩ	6.7 kΩ	5 kΩ
CKB ('LS93)	15 kΩ	15 kΩ	10 kΩ

TYPICAL OF ALL OUTPUTS

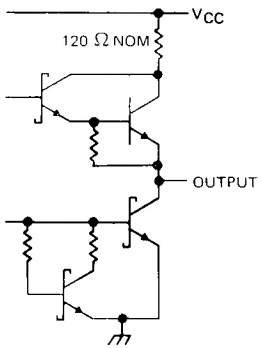

absolute maximum ratings over operating free-air temperature range (unless otherwise noted)

Supply voltage, V_{CC} (see Note 1) . . . . . 7 V
Input voltage . . . . . 5.5 V
Interemitter voltage (see Note 2) . . . . . 5.5 V
Operating free-air temperature range: SN5490A, SN5492A, SN5493A . . . . . −55°C to 125°C
SN7490A, SN7492A, SN7493A . . . . . 0°C to 70°C
Storage temperature range . . . . . −65°C to 150°C

NOTES. 1. Voltage values, except interemitter voltage, are with respect to network ground terminal.
2. This is the voltage between two emitters of a multiple emitter transistor. For these circuits, this rating applies between the two R_0 inputs, and for the '90A circuit, it also applies between the two R_9 inputs

recommended operating conditions

		SN5490A, SN5492A SN5493A			SN7490A, SN7492A SN7493A			UNIT
		MIN	NOM	MAX	MIN	NOM	MAX	
Supply voltage, V_{CC}		4.5	5	5.5	4.75	5	5.25	V
High-level output current, I_{OH}				−800			−800	μA
Low-level output current, I_{OL}				16			16	mA
Count frequency, f_{count} (see Figure 1)	A input	0		32	0		32	MHz
	B input	0		16	0		16	
Pulse width, t_w	A input	15			15			ns
	B input	30			30			
	Reset inputs	15			15			
Reset inactive-state setup time, t_{su}		25			25			ns
Operating free-air temperature, T_A		−55		125	0		70	°C

electrical characteristics over recommended operating free-air temperature range (unless otherwise noted)

PARAMETER		TEST CONDITIONS†		'90A			'92A			'93A			UNIT
				MIN	TYP	MAX	MIN	TYP	MAX	MIN	TYP	MAX	
V_{IH}	High-level input voltage			2			2			2			V
V_{IL}	Low-level input voltage					0.8			0.8			0.8	V
V_{IK}	Input clamp voltage	V_{CC} = MIN, I_I = −12 mA				−1.5			−1.5			−1.5	V
V_{OH}	High-level output voltage	V_{CC} = MIN, V_{IH} = 2 V, V_{IL} = 0.8 V, I_{OH} = −800 μA		2.4	3.4		2.4	3.4		2.4	3.4		V
V_{OL}	Low-level output voltage	V_{CC} = MIN, V_{IH} = 2 V, V_{IL} = 0.8 V, I_{OL} = 16 mA¶			0.2	0.4		0.2	0.4		0.2	0.4	V
I_I	Input current at maximum input voltage	V_{CC} = MAX, V_I = 5.5 V				1			1			1	mA
I_{IH}	High-level input current, Any reset	V_{CC} = MAX, V_I = 2.4 V				40			40			40	μA
	High-level input current, CKA					80			80			80	
	High-level input current, CKB					120			120			80	
I_{IL}	Low-level input current, Any reset	V_{CC} = MAX, V_I = 0.4 V				−1.6			−1.6			−1.6	mA
	Low-level input current, CKA					−3.2			−3.2			−3.2	
	Low-level input current, CKB					−4.8			−4.8			−3.2	
I_{OS}	Short-circuit output current§	V_{CC} = MAX	SN54'	−20		−57	−20		−57	−20		−57	mA
			SN74'	−18		−57	−18		−57	−18		−57	
I_{CC}	Supply current	V_{CC} = MAX, See Note 3			29	42		26	39		26	39	mA

† For conditions shown as MIN or MAX, use the appropriate value specified under recommended operating conditions.
‡ All typical values are at V_{CC} = 5 V, T_A = 25°C
§ Not more than one output should be shorted at a time.
¶ Q_A outputs are tested at I_{OL} = 16 mA plus the limit value for I_{IL} for the CKB input. This permits driving the CKB input while maintaining full fan out capability.
NOTE 3: I_{CC} is measured with all outputs open, both R_0 inputs grounded following momentary connection to 4.5 V, and all other inputs grounded.

TEXAS INSTRUMENTS
POST OFFICE BOX 655012 • DALLAS, TEXAS 75265

switching characteristics, V_{CC} = 5 V, T_A = 25°C

PARAMETER†	FROM (INPUT)	TO (OUTPUT)	TEST CONDITIONS	'90A			'92A			'93A			UNIT
				MIN	TYP	MAX	MIN	TYP	MAX	MIN	TYP	MAX	
f_{max}	CKA	Q_A	C_L = 15 pF, R_L = 400 Ω, See Figure 1	32	42		32	42		32	42		MHz
	CKB	Q_B		16			16			16			
t_{PLH}	CKA	Q_A			10	16		10	16		10	16	ns
t_{PHL}					12	18		12	18		12	18	
t_{PLH}	CKA	Q_D			32	48		32	48		46	70	ns
t_{PHL}					34	50		34	50		46	70	
t_{PLH}	CKB	Q_B			10	16		10	16		10	16	ns
t_{PHL}					14	21		14	21		14	21	
t_{PLH}	CKB	Q_C			21	32		10	16		21	32	ns
t_{PHL}					23	35		14	21		23	35	
t_{PLH}	CKB	Q_D			21	32		21	32		34	51	ns
t_{PHL}					23	35		23	35		34	51	
t_{PHL}	Set-to-0	Any			26	40		26	40		26	40	ns
t_{PLH}	Set-to-9	Q_A, Q_D			20	30							ns
t_{PHL}		Q_B, Q_C			26	40							

†f_{max} ≡ maximum count frequency
t_{PLH} ≡ propagation delay time, low-to-high-level output
t_{PHL} ≡ propagation delay time, high-to-low-level output

absolute maximum ratings over operating free-air temperature range (unless otherwise noted)

Supply voltage, V_{CC} (see Note 1) . . . . . 7 V
Input voltage: R inputs . . . . . 7 V
A and B inputs . . . . . 5.5 V
Operating free-air temperature range: SN54LS' Circuits . . . . . −55°C to 125°C
SN74LS' Circuits . . . . . 0°C to 70°C
Storage temperature range . . . . . −65°C to 150°C

NOTE 1: Voltage values are with respect to network ground terminal.

recommended operating conditions

		SN54LS90 SN54LS92 SN54LS93			SN74LS90 SN74LS92 SN74LS93			UNIT
		MIN	NOM	MAX	MIN	NOM	MAX	
Supply voltage, V_{CC}		4.5	5	5.5	4.75	5	5.25	V
High-level output current, I_{OH}				−400			−400	μA
Low-level output current, I_{OL}				4			8	mA
Count frequency, f_{count} (see Figure 1)	A input	0		32	0		32	MHz
	B input	0		16	0		16	
Pulse width, t_w	A input	15			15			ns
	B input	30			30			
	Reset inputs	30			30			
Reset inactive-state setup time, t_{su}		25			25			ns
Operating free-air temperature, T_A		−55		125	0		70	°C

electrical characteristics over recommended operating free-air temperature range (unless otherwise noted)

PARAMETER			TEST CONDITIONS†		SN54LS90 SN54LS92			SN74LS90 SN74LS92			UNIT
					MIN	TYP‡	MAX	MIN	TYP‡	MAX	
V_{IH}	High-level input voltage				2			2			V
V_{IL}	Low-level input voltage						0.7			0.8	V
V_{IK}	Input clamp voltage		V_{CC} = MIN, I_I = −18 mA				−1.5			−1.5	V
V_{OH}	High-level output voltage		V_{CC} = MIN, V_{IH} = 2 V, V_{IL} = V_{IL}max, I_{OH} = −400 μA		2.5	3.4		2.7	3.4		V
V_{OL}	Low-level output voltage		V_{CC} = MIN, V_{IH} = 2 V, V_{IL} = V_{IL} max,	I_{OL} = 4 mA¶		0.25	0.4		0.25	0.4	V
				I_{OL} = 8 mA¶					0.35	0.5	
I_I	Input current at maximum input voltage	Any reset	V_{CC} = MAX, V_I = 7 V				0.1			0.1	mA
		CKA	V_{CC} = MAX, V_I = 5.5 V				0.2			0.2	
		CKB					0.4			0.4	
I_{IH}	High-level input current	Any reset	V_{CC} = MAX, V_I = 2.7 V				20			20	μA
		[illegible]					40			40	
							80			80	
I_{IL}	Low-level input current	Any reset	V_{CC} = MAX, V_I = 0.4 V				−0.4			−0.4	mA
		[illegible]					−2.4			−2.4	
							−3.2			−3.2	
I_{OS}	Short-circuit output current§		V_{CC} = MAX		−20		−100	−20		−100	mA
I_{CC}	Supply current		V_{CC} = MAX, See Note 3	[illegible]		9	15		9	15	mA
				[illegible]		9	15		9	15	

†For conditions shown as MIN or MAX, use the appropriate value specified under recommended operating conditions.
‡All typical values are at V_{CC} = 5 V, T_A = 25°C.
§Not more than one output should be shorted at a time, and duration of the short-circuit should not exceed one second.
¶Q_A outputs are tested at specified I_{OL} plus the limit value of I_{IL} for the CKB input. This permits driving the CKB input while maintaining full fan-out capability.
NOTE 3: I_{CC} is measured with all outputs open, both R_O inputs grounded following momentary connection to 4.5 V, and all other inputs grounded.

TEXAS INSTRUMENTS
POST OFFICE BOX 655012 • DALLAS, TEXAS 75265

electrical characteristics over recommended operating free-air temperature range (unless otherwise noted)

PARAMETER		TEST CONDITIONS†			SN54LS90, SN54LS92, SN54LS93			SN74LS90, SN74LS92, SN74LS93			UNIT
					MIN	TYP‡	MAX	MIN	TYP‡	MAX	
V_{IH}	High-level input voltage				2			2			V
V_{IL}	Low-level input voltage						0.7			0.8	V
V_{IK}	Input clamp voltage	V_{CC} = MIN,	I_I = −18 mA				−1.5			−1.5	V
V_{OH}	High-level output voltage	V_{CC} = MIN, V_{IL} = V_{IL} max,	V_{IH} = 2 V, I_{OH} = −400 μA		2.5	3.4		2.7	3.4		V
V_{OL}	Low-level output voltage	V_{CC} = MIN, V_{IL} = V_{IL} max	V_{IH} = 2 V,	I_{OL} = 4 mA¶		0.25	0.4		0.25	0.4	V
				I_{OL} = 8 mA¶					0.35	0.5	
I_I	Input current at maximum input voltage	Any reset	V_{CC} = MAX,	V_I = 7 V			0.1			0.1	mA
		CKA or CKB	V_{CC} = MAX,	V_I = 5.5 V			0.2			0.2	
I_{IH}	High-level input current	Any reset	V_{CC} = MAX,	V_I = 2.7 V			20			20	μA
		CKA or CKB					40			80	
I_{IL}	Low-level input current	Any reset	V_{CC} = MAX,	V_I = 0.4 V			−0.4			−0.4	mA
		CKA					−2.4			−2.4	
		CKB					−1.6			−1.6	
I_{OS}	Short-circuit output current§	V_{CC} = MAX			−20		−100	−20		−100	mA
I_{CC}	Supply current	V_{CC} = MAX,	See Note 3			9	15		9	15	mA

†For conditions shown as MIN or MAX, use the appropriate value specified under recommended operating conditions
‡All typical values are at V_{CC} = 5 V, T_A = 25°C
§Not more than one output should be shorted at a time, and duration of the short-circuit should not exceed one second.
¶Q_A outputs are tested at specified I_{OL} plus the limit value for I_{IL} for the CKB input. This permits driving the CKB input while maintaining full fan-out capability.
NOTE 3: I_{CC} is measured with all outputs open, both R_0 inputs grounded following momentary connection to 4.5 V, and all other inputs grounded.

switching characteristics, V_{CC} = 5 V, T_A = 25°C

PARAMETER#	FROM (INPUT)	TO (OUTPUT)	TEST CONDITIONS	'LS90			'LS92			'LS93			UNIT
				MIN	TYP	MAX	MIN	TYP	MAX	MIN	TYP	MAX	
f_{max}	CKA	Q_A	C_L = 15 pF, R_L = 2 kΩ, See Figure 1	32	42		32	42		32	42		MHz
	CKB	Q_B		16			16			16			
t_{PLH}	CKA	Q_A			10	16		10	16		10	16	ns
t_{PHL}					12	18		12	18		12	18	
t_{PLH}	CKA	Q_D			32	48		32	48		46	70	ns
t_{PHL}					34	50		34	50		46	70	
t_{PLH}	CKB	Q_B			10	16		10	16		10	16	ns
t_{PHL}					14	21		14	21		14	21	
t_{PLH}	CKB	Q_C			21	32		10	16		21	32	ns
t_{PHL}					23	35		14	21		23	35	
t_{PLH}	CKB	Q_D			21	32		21	32		34	51	ns
t_{PHL}					23	35		23	35		34	51	
t_{PHL}	Set-to-0	Any			26	40		26	40		26	40	ns
t_{PLH}	Set-to-9	Q_A, Q_D			20	30							ns
t_{PHL}		Q_B, Q_C			26	40							

#f_{max} = maximum count frequency
t_{PLH} = propagation delay time, low-to-high-level output
t_{PHL} = propagation delay time, high-to-low-level output

PARAMETER MEASUREMENT INFORMATION

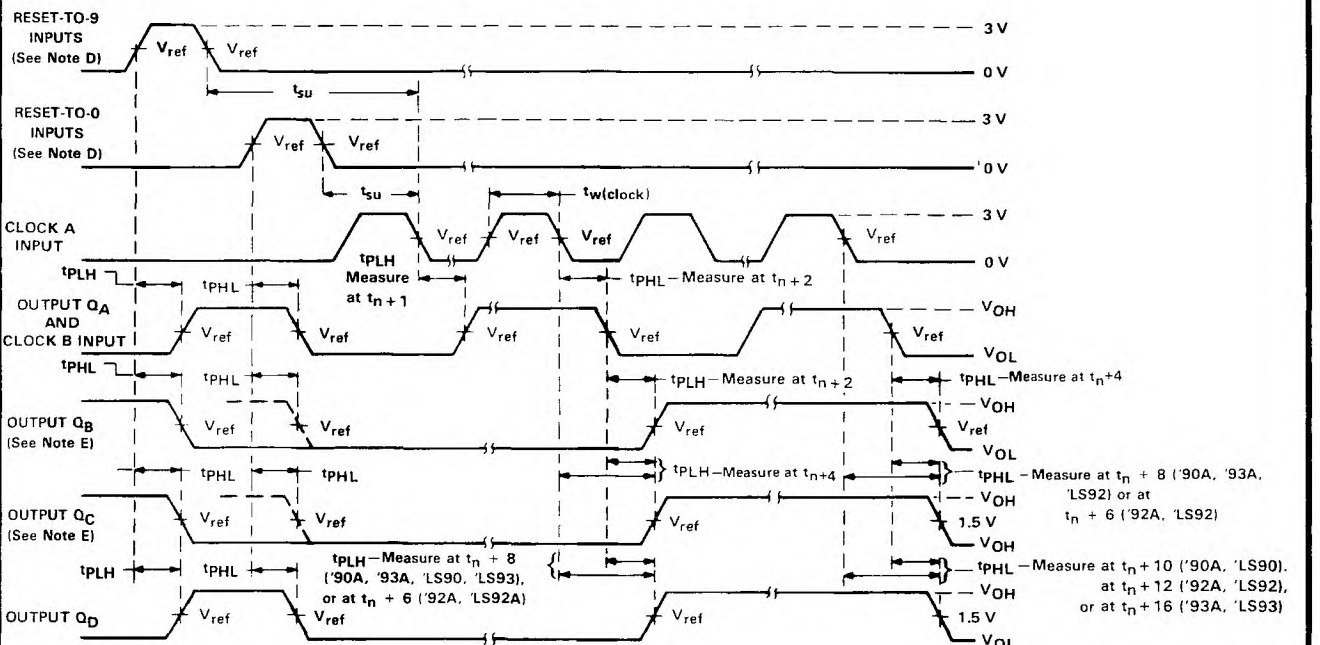

NOTES: A. Input pulses are supplied by a generator having the following characteristics
for '90A, '92A, '93A, $t_r \le 5$ ns, $t_f \le 5$ ns, PRR = 1 MHz, duty cycle = 50%, Z_{out} = 50 ohms;
for 'LS90, 'LS92, 'LS93, $t_r \le 15$ ns, $t_f \le 5$ ns, PRR = 1 MHz, duty cycle = 50%, Z_{out} = 50 ohms
B. C_L includes probe and jig capacitance.
C. All diodes are 1N3064 or equivalent.
D. Each reset input is tested separately with the other reset at 4.5 V.
E. Reference waveforms are shown with dashed lines.
F. For '90A, '92A, and '93A; V_{ref} = 1.5 V For 'LS90, 'LS92, and 'LS93, V_{ref} = 1.3 V

FIGURE 1A

TEXAS INSTRUMENTS
POST OFFICE BOX 655012 • DALLAS, TEXAS 75265

PARAMETER MEASUREMENT INFORMATION

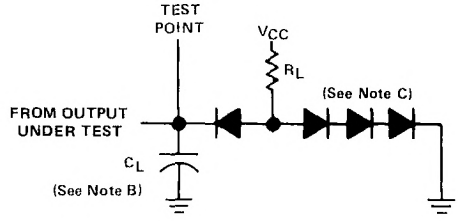

LOAD CIRCUIT

NOTES: A. Input pulses are supplied by a generator having the following characteristics:
for '90A, '92A, '93A, $t_r \leq 5$ ns, $t_f \leq 5$ ns, PRR = 1 MHz, duty cycle = 50%, $Z_{out} \approx 50$ ohms;
for 'LS90, 'LS92, 'LS93, $t_r \leq 15$ ns, $t_f \leq 5$ ns, PRR = 1 MHz, duty cycle = 50%, $Z_{out} \approx 50$ ohms.
B. C_L includes probe and jig capacitance.
C. All diodes are 1N3064 or equivalent.
D. Each reset input is tested separately with the other reset at 4.5 V.
E. Reference waveforms are shown with dashed lines.
F. For '90A, '92A, and '93A; $V_{ref} = 1.5$ V For 'LS90, 'LS92, and 'LS93; $V_{ref} = 1.3$ V

FIGURE 1B

MARCH 1974 – REVISED MARCH 1988

- **For applications in:**
  Digital Computer Systems
  Data-Handling Systems
  Control Systems

TYPE	TYPICAL MAXIMUM CLOCK FREQUENCY	TYPICAL POWER DISSIPATION
'91A	18 MHz	175 mW
'LS91	18 MHz	60 mW

SN5491A, SN54LS91 . . . J PACKAGE
SN7491A . . . N PACKAGE
SN74LS91 . . . D OR N PACKAGE
(TOP VIEW)

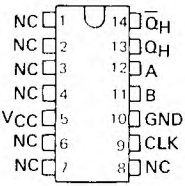

SN5491A, SN54LS91 . . . W PACKAGE
(TOP VIEW)

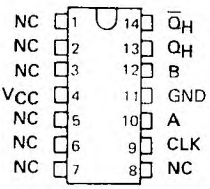

NC – No internal connection

description

These monolithic serial-in, serial-out, 8-bit shift registers utilize transistor-transistor logic (TTL) circuits and are composed of eight R-S master-slave flip-flops, input gating, and a clock driver. Single-rail data and input control are gated through inputs A and B and an internal inverter to form the complementary inputs to the first bit of the shift register. Drive for the internal common clock line is provided by an inverting clock driver. This clock pulse inverter/driver causes these circuits to shift information one bit on the positive edge of an input clock pulse.

FUNCTION TABLE

INPUTS AT t_n		OUTPUTS AT t_{n+8}	
A	B	Q_H	$\overline{Q}_H$
H	H	H	L
L	X	L	H
X	L	L	H

t_n = Reference bit time, clock low

t_{n+8} = Bit time after 8 low-to-high clock transitions.

logic symbol†

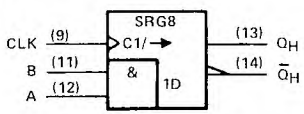

†This symbol is in accordance with ANSI/IEEE Std 91-1984 and IEC Publication 617-12.

schematics of inputs and outputs

'91A

EQUIVALENT OF EACH INPUT

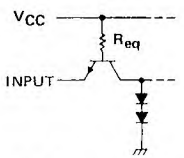

'91A: R_{eq} = 4 kΩ NOM

'LS91

EQUIVALENT OF EACH INPUT

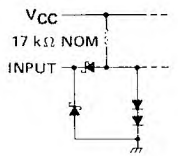

'91A

TYPICAL OF BOTH OUTPUTS

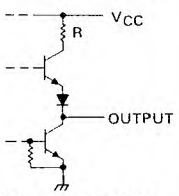

'91A: R = 130 Ω NOM

'LS91

TYPICAL OF BOTH OUTPUTS

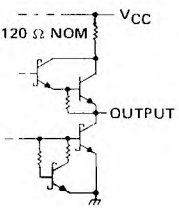

PRODUCTION DATA documents contain information current as of publication date. Products conform to specifications per the terms of Texas Instruments standard warranty. Production processing does not necessarily include testing of all parameters.

logic diagram (positive logic)

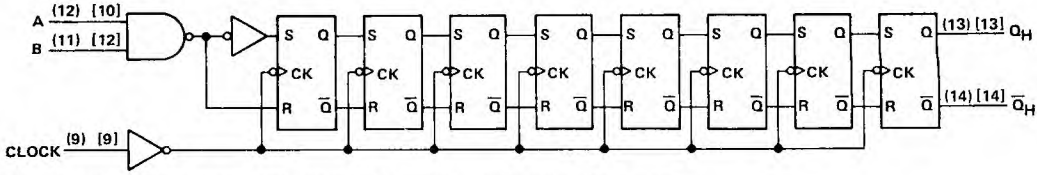

Pin numbers shown in ( ) are for the D, J or N packages and pin numbers shown in [ ] are for the W package

absolute maximum ratings over operating free-air temperature range (unless otherwise noted)

Supply voltage, V_{CC} (see Note 1) . . . . . 7 V
Input voltage (see Note 2) . . . . . 5.5 V
Operating free-air temperature range: SN5491A . . . . . −55°C to 125°C
SN7491A . . . . . 0°C to 70°C
Storage temperature range . . . . . −65°C to 150°C

NOTES: 1. Voltage values are with respect to network ground terminal.
2. Input signals must be zero or positive with respect to network ground terminal.

recommended operating conditions

	SN5491A			SN7491A			UNIT
	MIN	NOM	MAX	MIN	NOM	MAX	
Supply voltage, V_{CC}	4.5	5	5.5	4.75	5	[illegible]	V
High-level output current, I_{OH}			−400			[illegible]	μA
Low-level output current, I_{OL}			16			16	mA
Width of clock input pulse, t_w	25			25			ns
Setup time, t_{su} (see Figure 1)	25			25			ns
Hold time, t_h (see Figure 1)	0			0			ns
Operating free-air temperature, T_A	−55		125	0		70	°C

electrical characteristics over recommended operating free-air temperature range (unless otherwise noted)

PARAMETER		TEST CONDITIONS†	SN5491A			SN7491A			UNIT
			MIN	NOM	MAX	MIN	NOM	MAX	
V_{IH}	High-level input voltage		2			2			V
V_{IL}	Low-level input voltage				0.8			0.8	V
V_{OH}	High-level output voltage	V_{CC} = MIN, V_{IH} = 2 V, V_{IL} = 0.8 V, I_{OH} = −400 μA	2.4	3.5		2.4	3.5		V
V_{OL}	Low-level output voltage	V_{CC} = MIN, V_{IH} = 2 V, V_{IL} = 0.8 V, I_{OL} = 16 mA		0.2	0.4		0.2	0.4	V
I_I	Input current at maximum input voltage	V_{CC} = MAX, V_I = 5.5 V			1			1	mA
I_{IH}	High-level input current	V_{CC} = MAX, V_I = 2.4 V			40			40	μA
I_{IL}	Low-level input current	V_{CC} = MAX, V_I = 0.4 V			−1.6			−1.6	mA
I_{OS}	Short-circuit output current§	V_{CC} = MAX	−20		−57	−18		−57	mA
I_{CC}	Supply current	V_{CC} = MAX, See Note 3		35	50		35	58	mA

†For conditions shown as MIN or MAX, use the appropriate value specified under recommended operating conditions.
‡All typical values are at V_{CC} = 5 V, T_A = 25°C.
§Not more than one output should be shorted at a time.
NOTE 3: I_{CC} is measured after the eighth clock pulse with the output open and A and B inputs grounded.

switching characteristics, V_{CC} = 5 V, T_A = 25°C

PARAMETER		[illegible]	MIN	TYP	MAX	UNIT
f_{max}	Maximum clock frequency	C_L = [illegible] pF,	10	18		MHz
t_{PLH}	Propagation delay time, low-to-high-level output	R_L = 400 Ω,		24	40	ns
t_{PHL}	Propagation delay time, high-to-low-level output	See Figure 1		27	40	ns

TEXAS INSTRUMENTS
POST OFFICE BOX 655012 • DALLAS, TEXAS 75265

absolute maximum ratings over operating free-air temperature range (unless otherwise noted)

Supply voltage, V_{CC} (see Note 1) . . . . . 7 V
Input voltage . . . . . 7 V
Operating free-air temperature range: SN54LS91 . . . . . −55°C to 125°C
SN74LS91 . . . . . 0°C to 70°C
Storage temperature range . . . . . −65°C to 150°C

NOTES: 1. Voltage values are with respect to network ground terminal.

recommended operating conditions

	SN54LS91			SN74LS91			UNIT
	MIN	NOM	MAX	MIN	NOM	MAX	
Supply voltage, V_{CC}	4.5	5	5.5	4.75	5	5.25	V
High-level output current, I_{OH}			−400			−400	μA
Low-level output current, I_{OL}			4			8	mA
Width of clock input pulse, t_w	25			25			ns
Setup time, t_{su} (see Figure 1)	25			25			ns
Hold time, t_h (see Figure 1)	0			0			ns
Operating free-air temperature, T_A	−55		125	0		70	C

electrical characteristics over recommended operating free-air temperature range (unless otherwise noted)

PARAMETER		TEST CONDITIONS†		SN54LS91			SN74LS91			UNIT
				MIN	TYP‡	MAX	MIN	TYP‡	MAX	
V_{IH}	High-level input voltage			2			2			V
V_{IL}	Low-level input voltage					0.7			0.8	V
V_{IK}	Input clamp voltage	V_{CC} = MIN, I_I = −18 mA				−1.5			−1.5	V
V_{OH}	High-level output voltage	V_{CC} = MIN, V_{IH} = 2 V, V_{IL} = V_{IL} max, I_{OH} = −400 μA		2.5	3.5		2.7	3.5		V
V_{OL}	Low-level output voltage	V_{CC} = MIN, V_{IH} = 2 V, V_{IL} = V_{IL} max	I_{OL} = 4 mA		0.25	0.4		0.25	0.4	V
			I_{OL} = 8 mA					0.35	0.5	
I_I	Input current at maximum input voltage	V_{CC} = MAX, V_I = 7 V				0.1			0.1	mA
I_{IH}	High-level input current	V_{CC} = MAX, V_I = 2.7 V				20			20	μA
I_{IL}	Low-level input current	V_{CC} = MAX, V_I = 0.4 V				−0.4			−0.4	mA
I_{OS}	Short-circuit output current§	V_{CC} = MAX		−20		−100	−20		−100	mA
I_{CC}	Supply current	V_{CC} = MAX, See Note 3			12	20		12	20	mA

†For conditions shown as MIN or MAX, use the appropriate value specified under recommended operating conditions.
‡All typical values are at V_{CC} = 5 V, T_A = 25°C
§Not more than one output should be shorted at a time, and duration of the short-circuit should not exceed one second.
NOTE 3: I_{CC} is measured after the eighth clock pulse with the output open and A and B inputs grounded.

switching characteristics, V_{CC} = 5 V, T_A = 25°C

PARAMETER		TEST CONDITIONS	MIN	TYP	MAX	UNIT
f_{max}	Maximum clock frequency	C_L = 15 pF, R_L = 2 kΩ, See Figure 1	10	18		MHz
t_{PLH}	Propagation delay time, low-to-high-level output			24	40	ns
t_{PHL}	Propagation delay time, high-to-low-level output			27	40	ns

PARAMETER MEASUREMENT INFORMATION

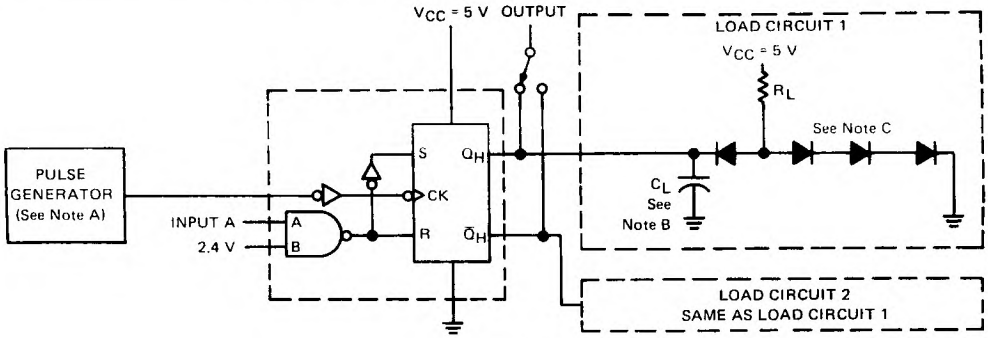

TEST CIRCUIT

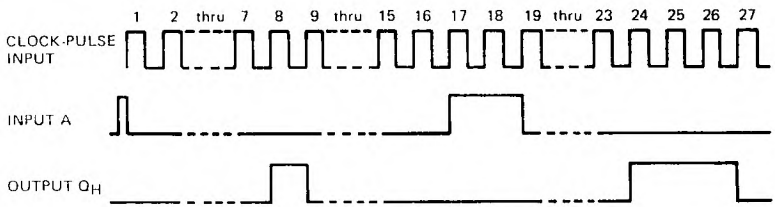

TYPICAL INPUT/OUTPUT WAVEFORMS

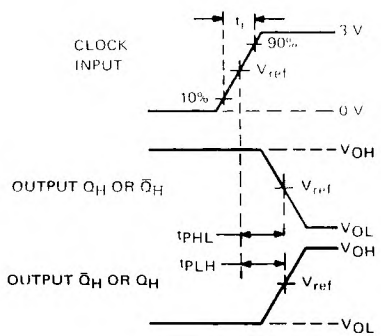

PROPAGATION DELAY TIMES VOLTAGE WAVEFORMS

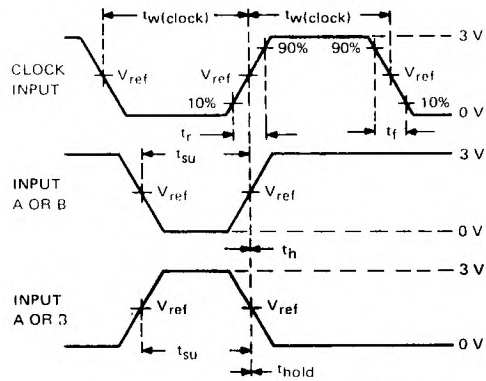

SWITCHING TIMES VOLTAGE WAVEFORMS

NOTES: A. The generator has the following characteristics. $t_{w(clock)}$ = 500 ns, PRR ≤ 1 MHz, Z_{out} ≈ 50 Ω. For SN5491A/SN7491A, t_r ≤ 10 ns and t_f ≤ 10 ns; for SN54LS91, t_r = 15 ns, and t_f = 6 ns.
B. C_L includes probe and jig capacitance.
C. All diodes are 1N3064 or equivalent.
D. For SN5491A/SN7491A, V_{ref} = 1.5 V; for SN54LS91/SN74LS91, V_{ref} = 1.3 V.

FIGURE 1–SWITCHING TIMES

TEXAS INSTRUMENTS
POST OFFICE BOX 655012 • DALLAS, TEXAS 75265

DECEMBER 1972 – REVISED MARCH 1988

TTL MSI PARALLEL-IN SERIAL-OUT REGISTERS
for application as

- **Dual-Source, Parallel-To-Serial Converter**
- **Serial-In Serial-Out Register**

description

These monolithic shift registers which utilize transistor-transistor logic (TTL) circuits in the familiar Series 54/74 configuration, are composed of four R-S master-slave flip-flops, four AND-OR-INVERT gates, and four inverter-drivers. Internal interconnections of these functions provide a versatile register which performs right-shift operations as a serial-in, serial-out register or as a dual-source, parallel-to-serial converter. A number of these registers may be connected in series to form an n-bit register.

All flip-flops are simultaneously set to a low output level by applying a high-level voltage to the clear input while the internal presets are inactive (high). See the preset function table below. Clearing is independent of the level of the clock input.

The register may be parallel loaded by using the clear input in conjunction with the preset inputs. After clearing all stages to low output levels, data to be loaded is applied to either the P1 or P2 inputs of each register stage (A, B, C, and D) with the corresponding preset enable input, PE1 or PE2, high. Presetting, like clearing, is independent of the level of the clock input.

SN5494 . . . J OR W PACKAGE
SN7494 . . . N PACKAGE
(TOP VIEW)

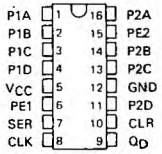

logic symbol†

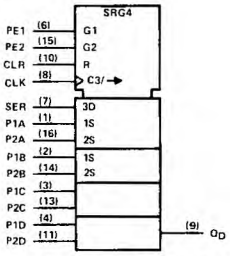

†This symbol is in accordance with ANSI/IEEE Std 91-1984 and IEC Publication 617-12.

Transfer of information to the outputs occurs on the positive-going edge of the clock pulse. The proper information must be setup at the R-S inputs of each flip-flop prior to the rising edge of the clock input waveform. The serial input provides this information for the first flip-flop, while the outputs of the subsequent flip-flops provide information for the remaining R-S inputs. The clear input must be at a low level and the internal presets must be inactive (high) when clocking occurs.

PRESET FUNCTION TABLE
(BIT A, TYPICAL OF ALL)

PRESET INPUTS				INTERNAL
PE1	P1A	PE2	P2A	PRESET A
L	X	L	X	H (inactive)
L	X	X	L	H (inactive)
X	L	L	X	H (inactive)
X	L	X	L	H (inactive)
H	H	X	X	L (active)
X	X	H	H	L (active)

REGISTER FUNCTION TABLE

INTERNAL PRESETS				INPUTS			INTERNAL OUTPUTS			OUTPUT
A	B	C	D	CLEAR	CLOCK	SERIAL	Q_A	Q_B	Q_C	Q_D
H	H	H	H	H	X	X	L	L	L	L
L	L	L	L	L	X	X	H	H	H	H
H	H	H	H	L	L	X	Q_{A0}	Q_{B0}	Q_{C0}	Q_{D0}
L	H	L	H	L	L	X	H	Q_{B0}	H	Q_{D0}
H	H	H	H	L	↑	H	H	Q_{An}	Q_{Bn}	Q_{Cn}
H	H	H	H	L	↑	L	L	Q_{An}	Q_{Bn}	Q_{Cn}

H = high level (steady state), L = low level (steady state), X = irrelevant, ↑ = transition from low to high level
Q_{A0}, Q_{B0}, Q_{C0}, Q_{D0} = the level of Q_A, Q_B, Q_C, or Q_D, respectively, before the indicated steady-state input conditions were established.
Q_{An}, Q_{Bn}, Q_{Cn} = the level of Q_A, Q_B, or Q_C, respectively, before the most-recent ↑ transition of the clock.

absolute maximum ratings over operating free-air temperature range (unless otherwise noted)

Supply voltage, V_{CC} (see Note 1) . . . . . 7 V
Input voltage (see Note 2) . . . . . 5.5 V
Operating free-air temperature range: SN5494 Circuits . . . . . −55°C to 125°C
SN7494 Circuits . . . . . 0°C to 70°C
Storage temperature range . . . . . −65°C to 150°C

NOTES: 1. Voltage values are with respect to network ground terminal.
2. Input voltage must be zero or positive with respect to network ground terminal.

PRODUCTION DATA documents contain information current as of publication date. Products conform to specifications per the terms of Texas Instruments standard warranty. Production processing does not necessarily include testing of all parameters.

logic diagram (positive logic)

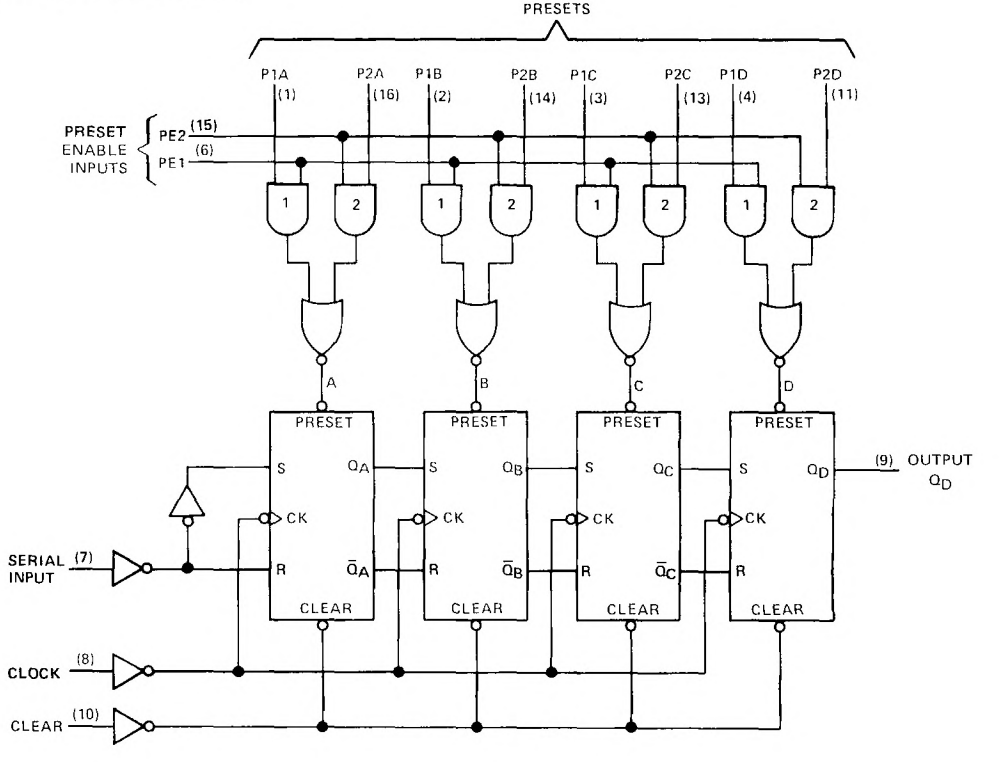

schematics of inputs and output

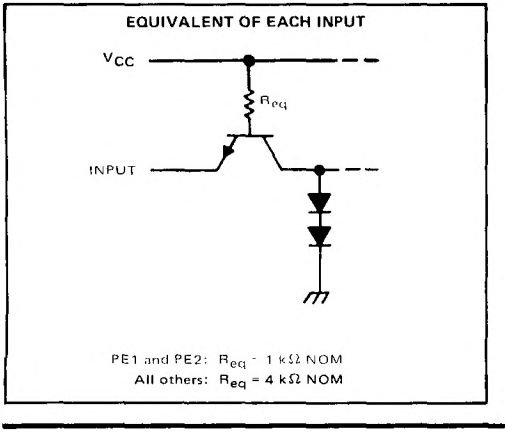

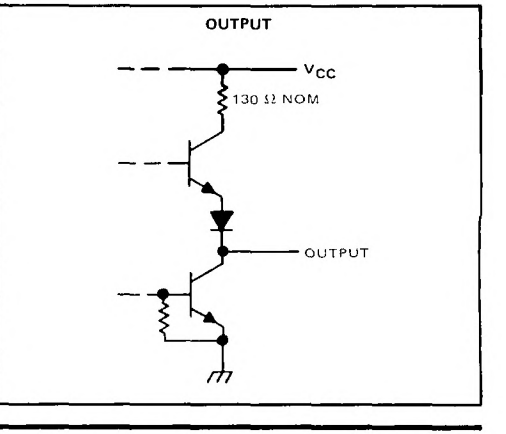

TEXAS INSTRUMENTS
POST OFFICE BOX 655012 • DALLAS, TEXAS 75265

recommended operating conditions

		SN5494			SN7494			UNIT
		MIN	NOM	MAX	MIN	NOM	MAX	
Supply voltage, V_{CC}		4.5	5	5.5	4.75	5	5.25	V
High-level output current, I_{OH}				−400			−400	μA
Low-level output current, I_{OL}				16			16	mA
Width of clock pulse, $t_{w(clock)}$		35			35			ns
Width of clear pulse, $t_{w(clear)}$		30			30			ns
Width of preset pulse, $t_{w(preset)}$		30			30			ns
Setup time, t_{su}	High-level data	35			35			ns
	Low-level data	25			25			
Hold time, t_h		0			0			ns
Operating free-air temperature, T_A		−55		125	0		70	°C

electrical characteristics over recommended operating free-air temperature range (unless otherwise noted)

PARAMETER			TEST CONDITIONS†	SN5494			SN7494			UNIT
				MIN	TYP	MAX	MIN	TYP	MAX	
V_{IH}	High-level input voltage			2			2			V
V_{IL}	Low-level input voltage					0.8			0.8	V
V_{OH}	High-level output voltage		V_{CC} = MIN, V_{IH} = 2 V, V_{IL} = 0.8 V, I_{OH} = −400 μA	2.4	3.5		2.4	3.5		V
V_{OL}	Low-level output voltage		V_{CC} = MIN, V_{IH} = 2 V, V_{IL} = 0.8 V, I_{OL} = 16 mA		0.2	0.4		0.2	0.4	V
I_I	Input current at maximum input voltage		V_{CC} = MAX, V_I = 5.5 V			1			1	mA
I_{IH}	High-level input current	Presets 1 and 2	V_{CC} = MAX, V_I = 2.4 V			160			160	μA
		Other inputs				40			40	
I_{IL}	Low-level input current	Presets 1 and 2	V_{CC} = MAX, V_I = 0.4 V			−6.4			−6.4	mA
		Other inputs				−1.6			−1.6	
I_{OS}	Short-circuit output current§		V_{CC} = MAX	−20		−57	−18		−57	mA
I_{CC}	Supply current		V_{CC} = MAX, See Note 3		35	50		35	58	mA

† For conditions shown as MIN or MAX, use the appropriate value specified under recommended operating conditions.
‡ All typical values are at V_{CC} = 5 V, T_A = 25°C.
§ Not more than one output should be shorted at a time.
NOTE 3: I_{CC} is measured with the outputs open, clear grounded following momentary application of 4.5 V, both preset-enable inputs grounded, and all other inputs at 4.5 V.

switching characteristics, V_{CC} = 5 V, T_A = 25°C

PARAMETER		TEST CONDITIONS	MIN	TYP	MAX	UNIT
f_{max}	Maximum clock frequency		10			MHz
t_{PLH}	Propagation delay time, low-to-high-level output from clock	C_L = 15 pF, R_L = 400 Ω, See Note 4		25	40	ns
t_{PHL}	Propagation delay time, high-to-low-level output from clock			25	40	ns
t_{PLH}	Propagation delay time, low-to-high level output from preset				35	ns
t_{PLH}	Propagation delay time, high-to-low-level output from clear				40	ns

NOTE 4: Load circuits and voltage waveforms are shown in Section 1.

TYPE	TYPICAL MAXIMUM CLOCK FREQUENCY	TYPICAL POWER DISSIPATION
'95A	36 MHz	195 mW
'LS95B	36 MHz	65 mW

SN5495A, SN54LS95B . . . J OR W PACKAGE
SN7495A . . . N PACKAGE
SN74LS95B . . . D OR N PACKAGE
(TOP VIEW)

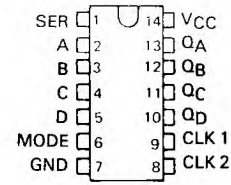

SN54LS95B . . . FK PACKAGE
(TOP VIEW)

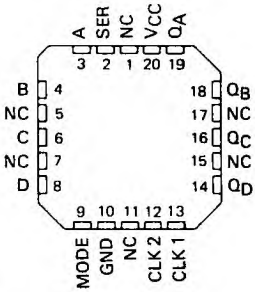

NC - No internal connection

description

These 4-bit registers feature parallel and serial inputs, parallel outputs, mode control, and two clock inputs. The registers have three modes of operation:

Parallel (broadside) load
Shift right (the direction Q_A toward Q_D)
Shift left (the direction Q_D toward Q_A)

Parallel loading is accomplished by applying the four bits of data and taking the mode control input high. The data is loaded into the associated flip-flops and appears at the outputs after the high-to-low transition of the clock-2 input. During loading, the entry of serial data is inhibited.

Shift right is accomplished on the high-to-low transition of clock 1 when the mode control is low; shift left is accomplished on the high-to-low transition of clock 2 when the mode control is high by connecting the output of each flip-flop to the parallel input of the previous flip-flop (Q_D to input C, etc.) and serial data is entered at input D. The clock input may be applied commonly to clock 1 and clock 2 if both modes can be clocked from the same source. Changes at the mode control input should normally be made while both clock inputs are low; however, conditions described in the last three lines of the function table will also ensure that register contents are protected.

FUNCTION TABLE

INPUTS								OUTPUTS			
MODE CONTROL	CLOCKS 2 (L)	CLOCKS 1 (R)	SERIAL	PARALLEL A	PARALLEL B	PARALLEL C	PARALLEL D	Q_A	Q_B	Q_C	Q_D
H	H	X	X	X	X	X	X	Q_{A0}	Q_{B0}	Q_{C0}	Q_{D0}
H	↓	X	X	a	b	c	d	a	b	c	d
H	↓	X	X	Q_B†	Q_C†	Q_D†	d	Q_{Bn}	Q_{Cn}	Q_{Dn}	d
L	L	H	X	X	X	X	X	Q_{A0}	Q_{B0}	Q_{C0}	Q_{D0}
L	X	↓	H	X	X	X	X	H	Q_{An}	Q_{Bn}	Q_{Cn}
L	X	↓	L	X	X	X	X	L	Q_{An}	Q_{Bn}	Q_{Cn}
↑	L	L	X	X	X	X	X	Q_{A0}	Q_{B0}	Q_{C0}	Q_{D0}
↓	L	L	X	X	X	X	X	Q_{A0}	Q_{B0}	Q_{C0}	Q_{D0}
↓	L	H	X	X	X	X	X	Q_{A0}	Q_{B0}	Q_{C0}	Q_{D0}
↑	H	L	X	X	X	X	X	Q_{A0}	Q_{B0}	Q_{C0}	Q_{D0}
↑	H	H	X	X	X	X	X	Q_{A0}	Q_{B0}	Q_{C0}	Q_{D0}

†Shifting left requires external connection of Q_B to A, Q_C to B, and Q_D to C. Serial data is entered at input D.
H = high level (steady state), L = low level (steady state), X = irrelevant (any input, including transitions)
↓ = transition from high to low level, ↑ = transition from low to high level
a, b, c, d = the level of steady-state input at inputs A, B, C, or D, respectively.
Q_{A0}, Q_{B0}, Q_{C0}, Q_{D0} = the level of Q_A, Q_B, Q_C, or Q_D, respectively, before the indicated steady-state input conditions were established.
Q_{An}, Q_{Bn}, Q_{Cn}, Q_{Dn} = the level of Q_A, Q_B, Q_C, or Q_D, respectively, before the most-recent ↓ transition of the clock.

PRODUCTION DATA documents contain information current as of publication date. Products conform to specifications per the terms of Texas Instruments standard warranty. Production processing does not necessarily include testing of all parameters.

logic symbol†

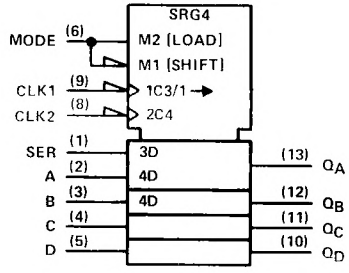

† This symbol is in accordance with ANSI/IEEE Std 91-1984 and IEC Publication 617-12.
Pin numbers shown are for D, J, N, and W packages

***logic diagram* (positive logic)**

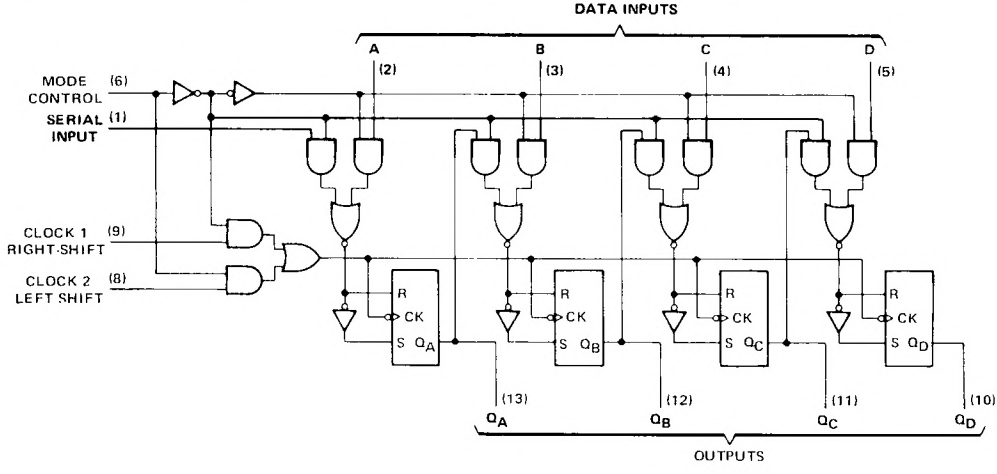

TEXAS INSTRUMENTS
POST OFFICE BOX 655012 • DALLAS, TEXAS 75265

schematics of inputs and outputs

'95A

EQUIVALENT OF EACH INPUT

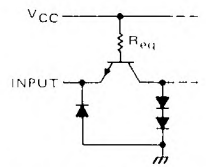

Mode control: R_{eq} = 3 kΩ NOM
Clock inputs: R_{eq} = 4 kΩ NOM
All other inputs: R_{eq} = 6 kΩ NOM

'95A

TYPICAL OF ALL OUTPUTS

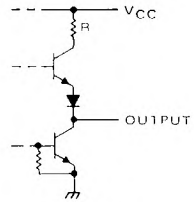

'95A R 100 Ω
'L95 R 500 Ω

'LS95B

EQUIVALENT OF CLOCK AND MODE CONTROL INPUTS

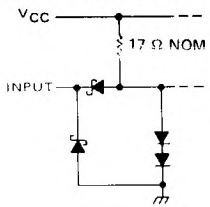

'LS95B

EQUIVALENT OF DATA AND SERIAL INPUTS

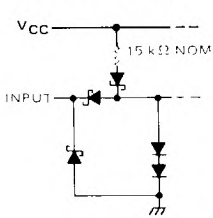

'LS95B

TYPICAL OF ALL OUTPUTS

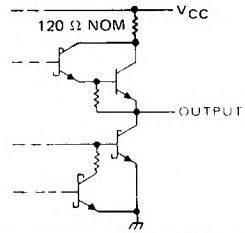

absolute maximum ratings over operating free-air temperature range (unless otherwise noted)

	SN54'	SN54LS'	SN74'	SN74LS'	UNIT
Supply voltage, V_{CC} (see Note 1)	7	7	7	7	V
Input voltage	5.5	7	5.5	7	V
Interemitter voltage (see Note 2)	5.5		5.5		V
Operating free-air temperature range	−55 to 125		0 to 70		°C
Storge temperature range	−65 to 150		−65 to 150		°C

NOTES: 1. Voltage values, except interemitter voltage, are with respect to network ground terminal.
2. This is the voltage between two emitters of a multiple-emitter input transistor. This rating applies between the clock-2 input and the mode control input of the '95A.

recommended operating conditions

	SN5495A			SN7495A			UNIT
	MIN	NOM	MAX	MIN	NOM	MAX	
Supply voltage, V_{CC}	4.5	5	5.5	4.75	5	5.25	V
High-level output current, I_{OH}			−800			−800	μA
Low-level output current, I_{OL}			16			16	mA
Clock frequency, f_{clock}	0		25	0		25	MHz
Width of clock pulse, $t_{w(clock)}$ (See Figure 1)	20			20			ns
Setup time, high-level or low-level data, t_{su} (See Figure 1)	15			15			ns
Hold time, high-level or low-level data, t_h (See Figure 1)	0			0			ns
Time to enable clock 1, $t_{enable\ 1}$ (See Figure 2)	15			15			ns
Time to enable clock 2 (See Figure 2)	15			15			ns
: o inhibit clock 1, $t_{inhibit\ 1}$ (See Figure 2)	5			5			ns
· · o inhibit clock 2, $t_{inhibit\ 2}$ (See Figure 2)	5			5			ns
Operating free-air temperature, T_A	−55		125	0		70	°C

2 TTL Devices

electrical characteristics over recommended operating free-air temperature range (unless otherwise noted)

PARAMETER			TEST CONDITIONS†	SN5495A			SN7495A			UNIT
				MIN	TYP‡	MAX	MIN	TYP‡	MAX	
V_{IH}	High-level input voltage			2			2			V
V_{IL}	Low-level input voltage					0.8			0.8	V
V_{IK}	Input clamp voltage		V_{CC} = MIN, I_I = −12 mA			−1.5			−1.5	V
V_{OH}	High-level output voltage		V_{CC} = MIN, V_{IH} = 2 V, V_{IL} = 0.8 V, I_{OH} = −800 μA	2.4	3.4		2.4	3.4		V
V_{OL}	Low-level output voltage		V_{CC} = MIN, V_{IH} = 2 V, V_{IL} = 0.8 V, I_{OL} = 16 mA		0.2	0.4		0.2	0.4	V
I_I	Input current at maximum input voltage		V_{CC} = MAX, V_I = 5.5 V			1			1	mA
I_{IH}	High-level input current	Serial, A, B, C, D, Clock 1 or 2	V_{CC} = MAX, V_I = 2.4 V			40			40	μA
		Mode control				80			80	
I_{IL}	Low-level input current	Serial, A, B, C, D, Clock 1 or 2	V_{CC} = MAX, V_I = 0.4 V			−1.6			−1.6	mA
		Mode control				−3.2			−3.2	
I_{OS}	Short-circuit output current§		V_{CC} = MAX	−18		−57	−18		−57	mA
I_{CC}	Supply current		V_{CC} = MAX, See Note 3		39	63		39	63	mA

† For conditions shown as MIN or MAX, use the appropriate value specified under recommended operating conditions.
‡ All typical values are at V_{CC} = 5 V, T_A = 25°C.
§ Not more than one output should be shorted at a time.
NOTE 3: I_{CC} is measured with all outputs and serial input open; A, B, C, and D inputs grounded; mode control at 4.5 V; and a momentary 3 V, then ground, applied to both clock inputs

switching characteristics, V_{CC} = 5 V, T_A = 25°C

PARAMETER		TEST CONDITIONS	MIN	TYP	MAX	UNIT
f_{max}	Maximum clock frequency	C_L = 15 pF, R_L = 400 Ω, See Figure 1	25	36		MHz
t_{PLH}	Propagation delay time, low-to-high-level output from clock			18	27	ns
t_{PHL}	Propagation delay time, high-to-low-level output from clock			21	32	ns

TEXAS INSTRUMENTS
POST OFFICE BOX 655012 • DALLAS, TEXAS 75265

recommended operating conditions

	SN54LS95B			SN74LS95B			UNIT
	MIN	NOM	MAX	MIN	NOM	MAX	
Supply voltage, V_{CC}	4.5	5	5.5	4.75	5	5.25	V
High-level output current, I_{OH}			−400			−400	μA
Low-level output current, I_{OL}			4			8	mA
Clock frequency, f_{clock}	0		25	0		25	MHz
Width of clock pulse, $t_{w(clock)}$ (see Figure 1)	20			20			ns
Setup time, high-level or low-level data, t_{su} (see Figure 1)	20			20			ns
Hold time, high-level or low-level data, t_h (see Figure 1)	20			10			ns
Time to enable clock 1, $t_{enable\ 1}$ (see Figure 2)	20			20			ns
Time to enable clock 2, $t_{enable\ 2}$ (see Figure 2)	20			20			ns
Time to inhibit clock 1, $t_{inhibit\ 1}$ (see Figure 2)	20			20			ns
Time to inhibit clock 2, $t_{inhibit\ 2}$ (see Figure 2)	20			20			ns
Operating free-air temperature, T_A	−55		125	0		70	°C

2

TTL Devices

electrical characteristics over recommended operating free-air temperature range (unless otherwise noted)

PARAMETER		TEST CONDITIONS†		SN54LS95B			SN74LS95B			UNIT
				MIN	TYP‡	MAX	MIN	TYP‡	MAX	
V_{IH}	High-level input voltage			2			2			V
V_{IL}	Low-level input voltage					0.7			0.8	V
V_{IK}	Input clamp voltage	V_{CC} = MIN,	I_I = −18 mA			−1.5			−1.5	V
V_{OH}	High-level output voltage	V_{CC} = MIN, V_{IL} = V_{IL} max,	V_{IH} = 2 V, I_{OH} = −400 μA	2.5	3.4		2.7	3.4		V
V_{OL}	Low-level output voltage	V_{CC} = MIN, V_{IH} = 2 V, V_{IL} = V_{IL} max	I_{OL} = 4 mA		0.25	0.4		0.25	0.4	V
			I_{OL} = 8 mA					0.35	0.5	
I_I	Input current at maximum input voltage	V_{CC} = MAX,	V_I = 7 V			0.1			0.1	mA
I_{IH}	High-level input current	V_{CC} = MAX,	V_I = 2.7 V			20			20	μA
I_{IL}	Low-level input current	V_{CC} = MAX,	V_I = 0.4 V			−0.4			−0.4	mA
I_{OS}	Short-circuit output current§	V_{CC} = MAX		−20		−100	−20		−100	mA
I_{CC}	Supply current	V_{CC} = MAX,	See Note 3		13	21		13	21	mA

† For conditions shown as MIN or MAX, use the appropriate value specified under recommended operating conditions.
‡ All typical values are at V_{CC} = 5 V, T_A = 25°C.
§ Not more than one output should be shorted at a time, and duration of the short-circuit should not exceed one second.
NOTE 3: I_{CC} is measured with all outputs and serial input open; A, B, C, and D inputs grounded; mode control at 4.5 V; and a momentary 3 V, then ground, applied to both clock inputs

switching characteristics, V_{CC} = 5 V, T_A = 25°C

PARAMETER		TEST CONDITIONS	MIN	TYP	MAX	UNIT
f_{max}	Maximum clock frequency	C_L = 15 pF, R_L = 2 kΩ, See Figure 1	25	36		MHz
t_{PLH}	Propagation delay time, low-to-high-level output from clock			18	27	ns
t_{PHL}	Propagation delay time, high-to-low-level output from clock			21	32	ns

PARAMETER MEASUREMENT INFORMATION

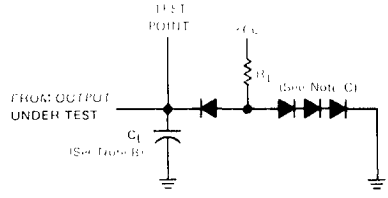

LOAD CIRCUIT

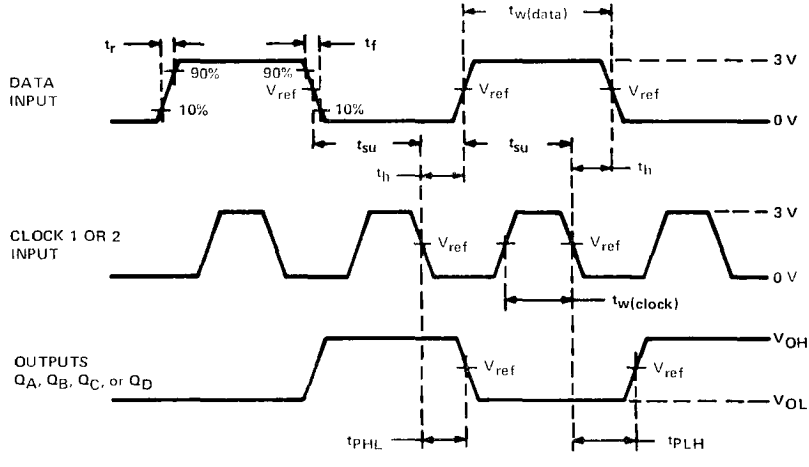

NOTES: A. Input pulses are supplied by a generator having the following characteristics: $t_r \leq 10$ ns, $t_f \leq 10$ ns, and $Z_{out} \approx 50\ \Omega$. For the data pulse generator, PRR = 500 kHz; for the clock pulse generator, PRR = 1 MHz. When testing f_{max}, vary PRR. For '95A, $t_{w(data)} \geq 20$ns, $t_{w(clock)} \geq 15$ ns. For 'LS95B, $t_{w(data)} \geq 20$ ns, $t_{w(clock)} \geq 15$ ns.

B. C_L includes probe and jig capacitance

C. All diodes are 1N3064 equivalent

D. For '95A, $V_{ref} = 1.5$ V; for 'LS95B, $V_{ref} = 1.3$ V

VOLTAGE WAVEFORMS
FIGURE 1-SWITCHING TIMES

PARAMETER MEASUREMENT INFORMATION

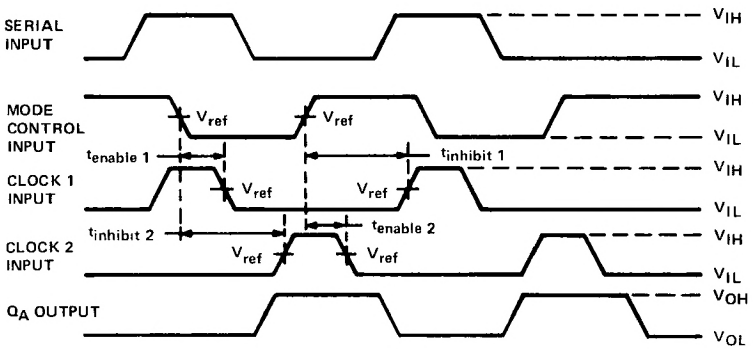

NOTES: A. Input is at a low level.
B. For '95A, V_{ref} = 1.5 V; for 'LS958, V_{ref} = 1.3 V.

VOLTAGE WAVEFORMS
FIGURE 2-CLOCK ENABLE/INHIBIT TIMES

- N-Bit Serial-To-Parallel Converter
- N-Bit Parallel-To-Serial Converter
- N-Bit Storage Register

TYPE	TYPICAL PROPAGATION DELAY TIME	TYPICAL POWER DISSIPATION
'96	25 ns	240 mW
'LS96	25 ns	60 mW

SN5496, SN54LS96 . . . J OR W PACKAGE
SN7496 . . . N PACKAGE
SN74LS96 . . . D OR N PACKAGE
(TOP VIEW)

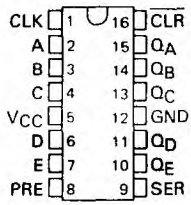

description

These shift registers consist of five R-S master-slave flip-flops connected to perform parallel-to-serial or serial-to-parallel conversion of binary data. Since both inputs and outputs for all flip-flops are accessible, parallel-in/parallel-out or serial-in/serial-out operation may be performed.

All flip-flops are simultaneously set to a low output level by applying a low-level voltage to the clear input while the preset is inactive (low). Clearing is independent of the level of the clock input.

The register may be parallel loaded by using the clear input in conjunction with the preset inputs. After clearing all stages to low output levels, data to be loaded is applied to the individual preset inputs (A, B, C, D, and E) and a high-level load pulse is applied to the preset enable input. Presetting like clearing is independent of the level of the clock input.

Transfer of information to the outputs occurs on the positive-going edge of the clock pulse. The proper information must be set up at the R-S inputs of each flip-flop prior to the rising edge of the clock input waveform. The serial input provides this information to the first flip-flop, while the outputs of the subsequent flip-flops provide information for the remaining R-S inputs. The clear input must be high and the preset or preset enable inputs must be low when clocking occurs.

FUNCTION TABLE

INPUTS								OUTPUTS				
CLEAR	PRESET ENABLE	PRESET A	B	C	D	E	CLOCK	SERIAL	Q_A	Q_B	Q_C	Q_D	Q_D
L	L	X	X	X	X	X	X	X	L	L	L	L	L
L	X	L	L	L	L	L	X	X	L	L	L	L	L
H	H	H	H	H	H	H	X	X	H	H	H	H	H
H	H	L	L	L	L	L	L	X	Q_{A0}	Q_{B0}	Q_{C0}	Q_{D0}	Q_{E0}
H	H	H	L	H	L	H	L	X	H	Q_{B0}	H	Q_{D0}	H
H	L	X	X	X	X	X	L	X	Q_{A0}	Q_{B0}	Q_{C0}	Q_{D0}	Q_{E0}
H	L	X	X	X	X	X	↑	H	H	Q_{An}	Q_{Bn}	Q_{Cn}	Q_{Dn}
H	L	X	X	X	X	X	↑	L	L	Q_{An}	Q_{Bn}	Q_{Cn}	Q_{Dn}

H = high level (steady state), L = low level (steady state)
X = irrelevant (any input, including transition)
↑ = transition from low to high level
Q_{A0}, Q_{B0}, etc = the level of Q_A, Q_B, etc, respectively before the indicated steady-state input conditions were established.
Q_{An}, Q_{Bn}, etc = the level of Q_A, Q_B, etc, respectively before the most-recent ↑ transition of the clock

logic symbol†

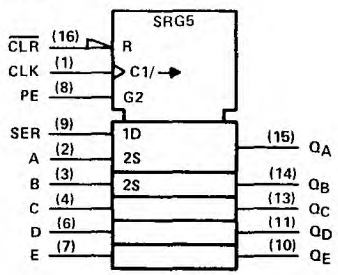

†This symbol is in accordance with ANSI/IEEE Std 91-1984 and IEC Publication 617-12.

PRODUCTION DATA documents contain information current as of publication date. Products conform to specifications per the terms of Texas Instruments standard warranty. Production processing does not necessarily include testing of all parameters.

typical clear, shift, preset, and shift sequences

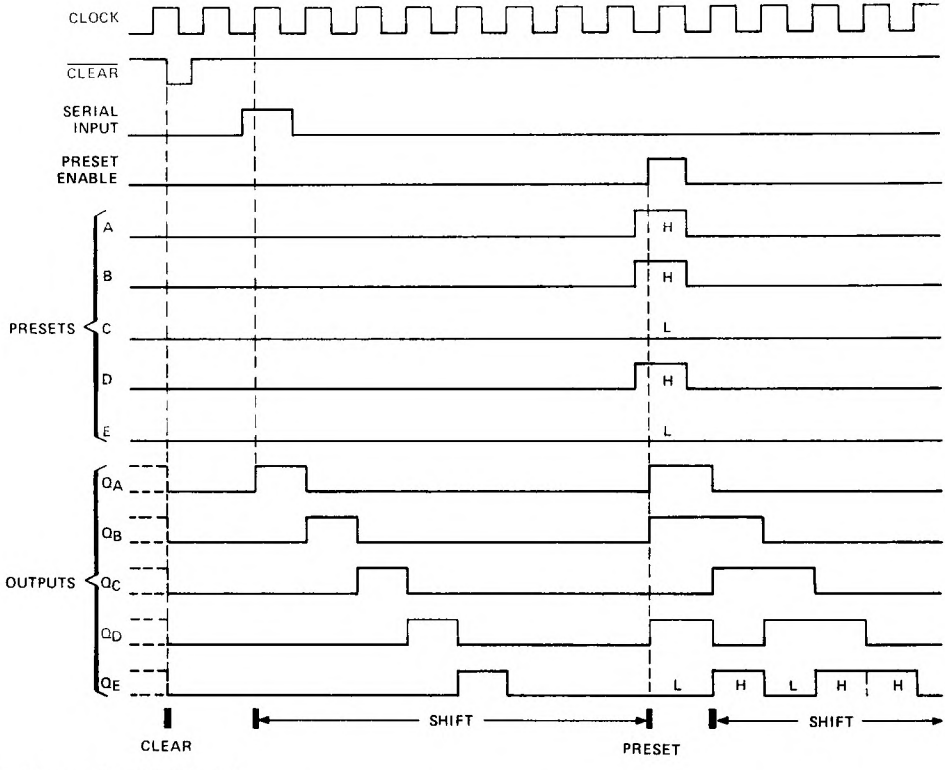

logic diagram (positive logic)

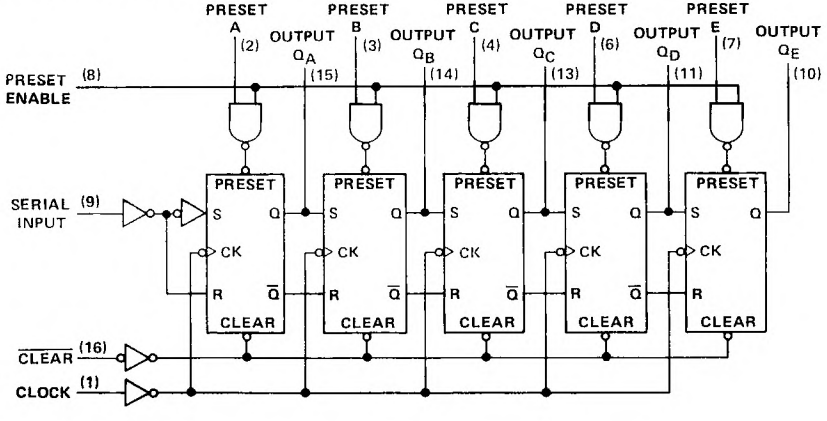

TEXAS INSTRUMENTS
POST OFFICE BOX 655012 • DALLAS, TEXAS 75265

schematics of inputs and outputs

'96

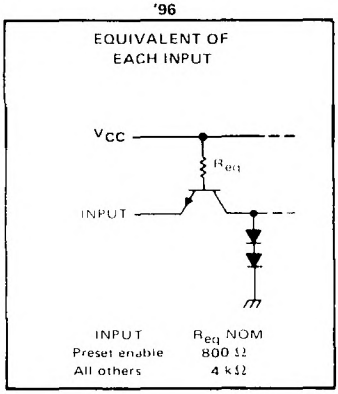

'96

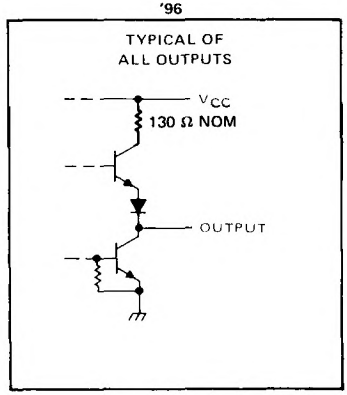

'LS96

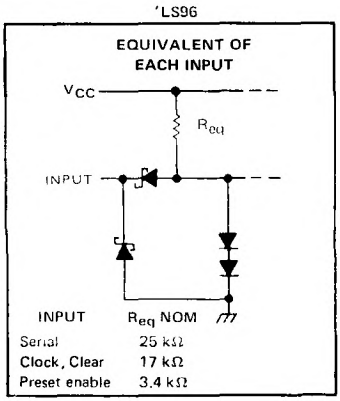

'LS96

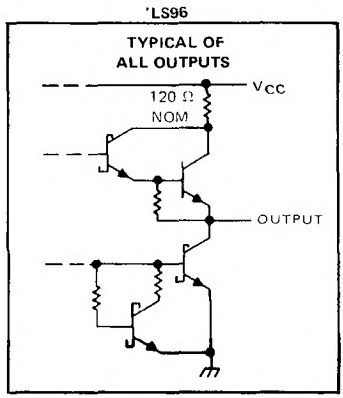

absolute maximum ratings over operating free-air temperature range (unless otherwise noted)

Supply voltage, V_{CC} (see Note 1) . . . . . 7 V
Input voltage (see Note 2): '96 . . . . . 5.5 V
'LS96 . . . . . 7 V
Operating free-air temperature: SN54' . . . . . −55°C to 125°C
SN74' . . . . . 0°C to 70°C
Storage temperature range . . . . . −65°C to 150°C

NOTES: 1. Voltage values are with respect to network ground terminal.
2. Input voltage must be zero or positive with respect to network ground terminal.

recommended operating conditions

	SN5496			SN7496			UNIT
	MIN	NOM	MAX	MIN	NOM	MAX	
Supply voltage, V_{CC}	4.5	5	5.5	4.75	5	5.25	V
High-level output current, I_{OH}			−400			−400	μA
Low-level output current, I_{OL}			16			16	mA
Clock frequency, f_{clock}	0		10	0		10	MHz
Width of clock input pulse, $t_{w(clock)}$	35			35			ns
Width of preset and clear input pulse, t_w	30			30			ns
Serial input setup time, t_{su} (see Figure 1)	30			30			ns
Serial input hold time, t_h (see Figure 1)	0			0			ns
Operating free-air temperature, T_A	−55		125	0		70	°C

electrical characteristics over recommended operating free-air temperature range (unless otherwise noted)

PARAMETER			TEST CONDITIONS†	SN5496			SN7496			UNIT
				MIN	TYP‡	MAX	MIN	TYP‡	MAX	
V_{IH}	High-level input voltage			2			2			V
V_{IL}	Low-level input voltage					0.8			0.8	V
V_{OH}	High-level output voltage		V_{CC} = MIN, V_{IH} = 2 V, V_{IL} = 0.8 V, I_{OH} = −400 μA	2.4	3.4		2.4	3.4		V
V_{OL}	Low-level output voltage		V_{CC} = MIN, V_{IH} = 2 V, V_{IL} = 0.8 V, I_{OL} = 16 mA		0.2	0.4		0.2	0.4	V
I_I	Input current at maximum input voltage		V_{CC} = MAX, V_I = 5.5 V			1			1	mA
I_{IH}	High-level input current	any input except preset enable	V_{CC} = MAX, V_I = 2.4 V			40			40	μA
		preset enable				200			200	
I_{IL}	Low-level input current	any input except preset enable	V_{CC} = MAX, V_I = 0.4 V			−1.6			−1.6	mA
		preset enable				−8			−8	
I_{OS}	Short-circuit output current§		V_{CC} = MAX	−20		−57	−18		−57	mA
I_{CC}	Supply current		V_{CC} = MAX, See Note 3		48	68		48	79	mA

†For conditions shown as MIN or MAX, use the appropriate value specified under recommended operating conditions.
‡All typical values are at V_{CC} = 5 V, T_A = 25°C.
§Not more than one output should be shorted at a time.
NOTE 3: I_{CC} is measured with the clear input grounded and all other inputs and outputs open.

switching characteristics, V_{CC} = 5 V, T_A = 25°C

PARAMETER		TEST CONDITIONS	MIN	TYP	MAX	UNIT
t_{PLH}	Propagation delay time, low-to-high-level output from clock	C_L = 15 pF, R_L = 400 Ω, See Figure 1		25	40	ns
t_{PHL}	Propagation delay time, high-to-low-level output from clock			25	40	ns
t_{PLH}	Propagation delay time, low-to-high-level output from preset or preset enable			28	35	ns
t_{PHL}	Propagation delay time, high-to-low-level output from clear				55	ns

TEXAS INSTRUMENTS
POST OFFICE BOX 655012 • DALLAS, TEXAS 75265

recommended operating conditions

	SN54LS96			SN74LS96			UNIT
	MIN	NOM	MAX	MIN	NOM	MAX	
Supply voltage, V_{CC}	4.5	5	5.5	4.75	5	5.25	V
High-level output current, I_{OH}			−400			−400	μA
Low-level output current, I_{OL}			4			8	mA
Clock frequency, f_{clock}	0		25	0		25	MHz
Width of clock input pulse, $t_{w(clock)}$	20			20			ns
Width of preset and clear input pulse, t_w	30			30			ns
Serial input setup time, t_{setup} (see Figure 1)	30			30			ns
Serial input hold time, t_{hold} (see Figure 1)	0			0			ns
Operating free-air temperature, T_A	−55		125	0		70	°C

electrical characteristics over recommended operating free-air temperature range (unless otherwise noted)

PARAMETER		TEST CONDITIONS†		SN54LS96			SN74LS96			UNIT
				MIN	TYP‡	MAX	MIN	TYP‡	MAX	
V_{IH} High-level input voltage				2			2			V
V_{IL} Low-level input voltage						0.7			0.8	V
V_{IK} Input clamp voltage		V_{CC} = MIN, I_I = −18 mA				−1.5			−1.5	V
V_{OH} High-level output voltage		V_{CC} = MIN, V_{IH} = 2 V, V_{IL} = V_{IL} max, I_{OH} = −400 μA		2.5	3.5		2.7	3.5		V
V_{OL} Low-level output voltage		V_{CC} = MIN, V_{IH} = 2 V, V_{IL} = V_{IL} max	I_{OL} = 4 mA		0.25	0.4		0.25	0.4	V
			I_{OL} = 8 mA					0.35	0.5	
I_I Input current at maximum input voltage	Preset enable	V_{CC} = MAX, V_I = 7 V				0.5			0.5	mA
	All others					0.1			0.1	
I_{IH} High-level input current	Preset enable	V_{CC} = MAX, V_I = 2.7 V				100			100	μA
	All others					20			20	
I_{IL} Low-level input current	Preset enable	V_{CC} = MAX, V_I = 0.4 V				−2			−2	mA
	All others					−0.4			−0.4	
I_{OS} Short-circuit output current§		V_{CC} = MAX		−20		−100	−20		−100	mA
I_{CC} Supply current		V_{CC} = MAX, See Note 3			12	20		12	20	mA

†For conditions shown at MIN or MAX, use the appropriate value specified under recommended operating conditions.
‡All typical values are at V_{CC} = 5 V, T_A = 25°C
§Not more than one output should be shorted at a time, and duration of the short-circuit should not exceed one second.
NOTE 3: I_{CC} is measured with the clear input grounded and all other inputs and outputs open.

switching characteristics, V_{CC} = 5 V, T_A = 25°C

PARAMETER		TEST CONDITIONS	MIN	TYP	MAX	UNIT
t_{PLH}	Propagation delay time, low-to-high-level output from clock	C_L = 15 pF, R_L = 2 kΩ, See Figure 1		25	40	ns
t_{PHL}	Propagation delay time, high-to-low-level output from clock			25	40	ns
t_{PLH}	Propagation delay time, low-to-high-level output from preset or preset enable			28	35	ns
t_{PHL}	Propagation delay time, high-to-low-level output from clear				55	ns

PARAMETER MEASUREMENT INFORMATION

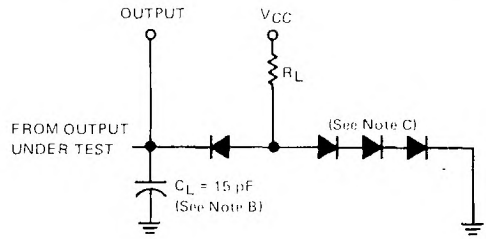

LOAD CIRCUIT

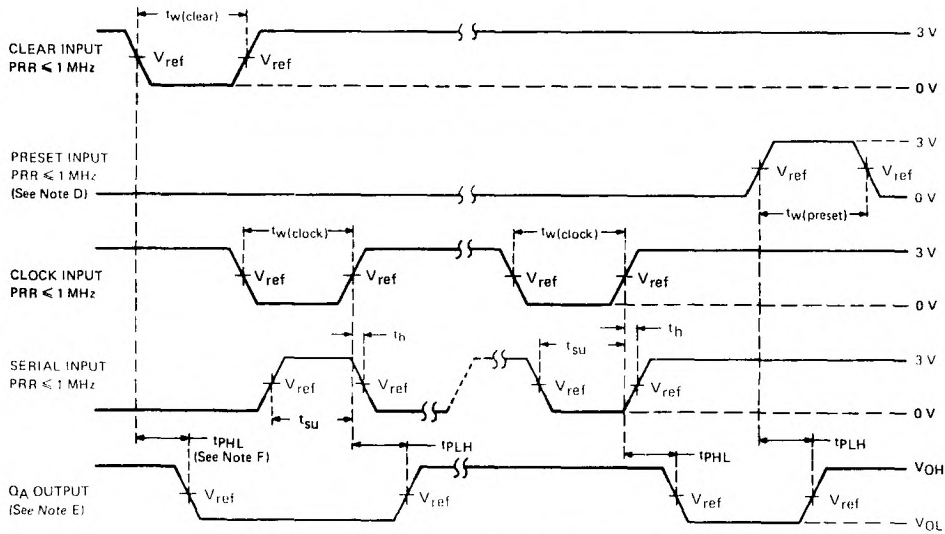

VOLTAGE WAVEFORMS

NOTES: A. Input pulses are supplied by pulse generators having the following characteristics: duty cycle ≤ 50%, Z_{out} ≈ 50 Ω; for '96, t_r ≤ 10 ns, t_f ≤ 10 ns, and for 'LS96 t_r = 15 ns, t_f = 6 ns.

B. C_L includes probe and jig capacitance.

C. All diodes are 1N3064 or equivalent.

D. Preset may be tested by applying a high-level voltage to the individual preset inputs and pulsing the preset enable or by applying a high-level voltage to the preset enable and pulsing the individual preset inputs.

E. Q_A output is illustrated. Relationship of serial input to other Q outputs is illustrated in the typical shift sequence.

F. Outputs are set to the high level prior to the measurement of t_{PHL} from the clear input.

G. For '96, V_{ref} = 1.5 V; for 'LS96 V_{ref} = 1.3 V.

FIGURE 1–SWITCHING TIMES

TEXAS INSTRUMENTS
POST OFFICE BOX 655012 • DALLAS, TEXAS 75265

DECEMBER 1972 – REVISED MARCH 1988

- Perform Fixed-Rate or Variable-Rate Frequency Division
- For Applications in Arithmetic, Radar, Digital-to-Analog (D/A), Analog-to-Digital (A/D), and other Conversion Operations
- Typical Maximum Clock Frequency . . . 32 Megahertz

SN5497 . . . J PACKAGE
SN7497 . . . N PACKAGE
(TOP VIEW)

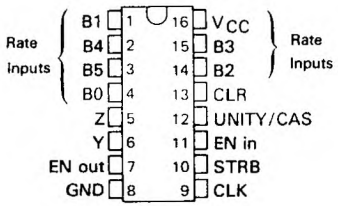

description

These monolithic, fully synchronous, programmable counters utilize Series 54/74 TTL circuitry to achieve 32-megahertz typical maximum operating frequencies. These six-bit serial binary counters feature buffered clock, clear, and enable inputs to control the operation of the counter, and a strobe input to enable or inhibit the rate input/decoding AND-OR-INVERT gates. The outputs have additional gating for cascading and transferring unity-count rates.

The counter is enabled when the clear, strobe, and enable inputs are low. With the counter enabled, the output frequency is equal to the input frequency multiplied by the rate input M and divided by 64, ie.:

$$f_{out} = \frac{M \cdot f_{in}}{64}$$

where: $M = F \cdot 2^5 + E \cdot 2^4 + D \cdot 2^3 + C \cdot 2^2 + B \cdot 2^1 + A \cdot 2^0$

When the rate input is binary 0 (all rate inputs low), Z remains high. In order to cascade devices to perform 12-bit rate multiplication, the enable output is connected to the enable and strobe inputs of the next stage, the Z output of each stage is connected to the unity/cascade input of the other stage, and the sub-multiple frequency is taken from the Y output.

The unity/cascade input, when connected to the clock input, may be utilized to pass the clock frequency (inverted) to the Y output when the rate input/decoding gates are inhibited by the strobe. The unity/cascade input may also be used as a control for the Y output.

logic symbol†

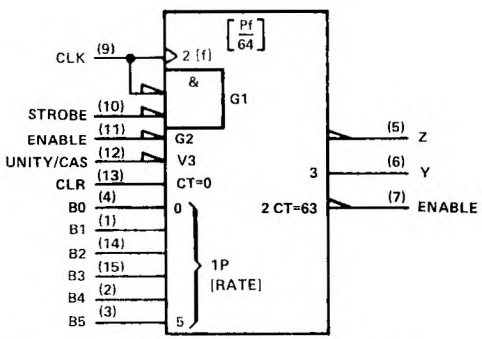

† This symbol is in accordance with ANSI/IEEE Std 91-1984 and IEC Publication 617-12.

PRODUCTION DATA documents contain information current as of publication date. Products conform to specifications per the terms of Texas Instruments standard warranty. Production processing does not necessarily include testing of all parameters.

schematics of inputs and outputs

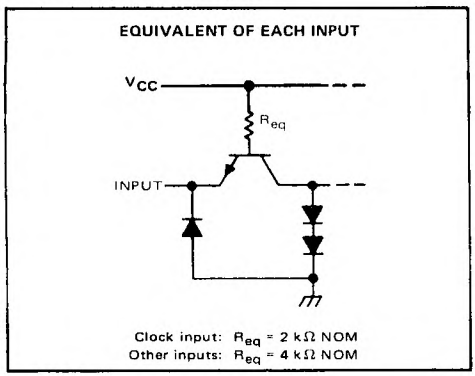

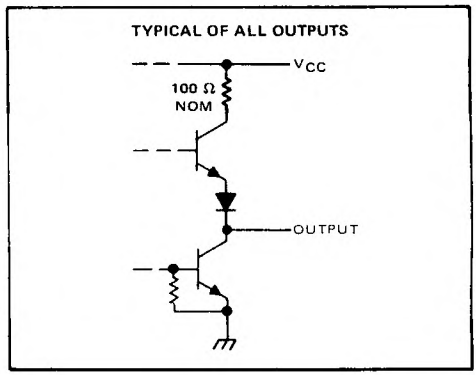

STATE AND/OR RATE FUNCTION TABLE (See Note A)

INPUTS									OUTPUTS			
			BINARY RATE						LOGIC LEVEL OR NUMBER OF PULSES			
CLEAR	ENABLE	STROBE	B5	B4	B3	B2	B1	B0	NUMBER OF CLOCK PULSES	UNITY/ CASCADE	Y	Z	ENABLE	NOTES
H	X	H	X	X	X	X	X	X	X	H	L	H	H	B
L	L	L	L	L	L	L	L	L	64	H	L	H	1	C
L	L	L	L	L	L	L	L	H	64	H	1	1	1	C
L	L	L	L	L	L	L	H	L	64	H	2	2	1	C
L	L	L	L	L	L	H	L	L	64	H	4	4	1	C
L	L	L	L	L	H	L	L	L	64	H	8	8	1	C
L	L	L	L	H	L	L	L	L	64	H	16	16	1	C
L	L	L	H	L	L	L	L	L	64	H	32	32	1	C
L	L	L	H	H	H	H	H	H	64	H	63	63	1	C
L	L	L	H	H	H	H	H	H	64	L	H	63	1	D
L	L	L	H	L	H	L	L	L	64	H	40	40	1	E

NOTES: A. H = high level, L = low level, X = irrelevant. All remaining entries are numeric counts.

B. This is a simplified illustration of the clear function. The states of clock and strobe can affect the logic level of Y and Z. A low unity/cascade will cause output Y to remain high.

C. Each rate illustrated assumes a constant value at rate inputs; however, these illustrations in no way prohibit variable-rate inputs.

D. Unity/cascade is used to inhibit output Y.

E. $f_{out} = \frac{M \cdot f_{in}}{64} = \frac{(8 + 32)\, f_{in}}{64} = \frac{40\, f_{in}}{64} = 0.625\, f_{in}$

TEXAS INSTRUMENTS
POST OFFICE BOX 655012 • DALLAS, TEXAS 75265

logic diagram (positive logic)

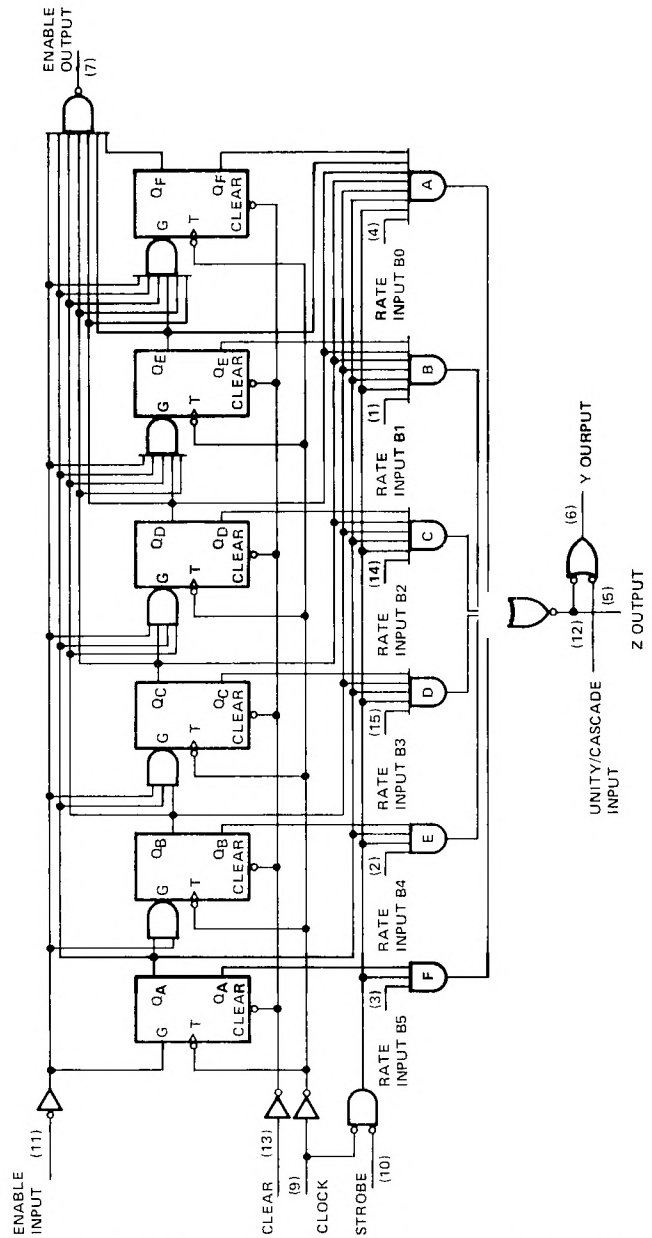

absolute maximum ratings over operating free-air temperature range (unless otherwise noted)

Supply voltage, V_{CC} (see Note 1) . . . . . 7 V
Input voltage . . . . . 5.5 V
Operating free-air temperature range: SN5497 (see Note 2) . . . . . −55°C to 125°C
SN7497 . . . . . 0°C to 70°C
Storage temperature range . . . . . −65°C to 150°C

recommended operating conditions

	SN5497			SN7497			UNIT
	MIN	NOM	MAX	MIN	NOM	MAX	
Supply voltage, V_{CC}	4.5	5	5.5	4.75	5	5.25	V
High-level output current, I_{OH}			−400			−400	μA
Low-level output current, I_{OL}			16			16	mA
Clock frequency, f_{clock}	0		25	0		25	MHz
Width of clock pulse, $t_{w(clock)}$	20			20			ns
Width of clear pulse, $t_{w(clear)}$	15			15			ns
Enable setup time, t_{su}: (See Figure 1)							
Before positive-going transition of clock pulse	25			25			ns
Before negative-going transition of previous clock pulse	0		$t_{w(clock)}-10$	0		$t_{w(clock)}-10$	
Enable hold time, t_h: (See Figure 1)							
After positive-going transition of clock pulse	0		$t_{w(clock)}-10$	0		$t_{w(clock)}-10$	ns
After negative-going transition of previous clock pulse	20		$t_{cp}-10$	20		$t_{cp}-10$	
Operating free-air temperature, T_A (See Note 2)	−55		125	0		70	°C

electrical characteristics over recommended operating free-air temperature range (unless otherwise noted)

PARAMETER			TEST CONDITIONS†		MIN	TYP‡	MAX	UNIT
V_{IH}	High-level input voltage				2			V
V_{IL}	Low-level input voltage						0.8	V
V_{IK}	Input clamp voltage		V_{CC} = MIN,	I_I = −12 mA			−1.5	V
V_{OH}	High-level output voltage		V_{CC} = MIN, V_{IL} = 0.8 V,	V_{IH} = 2 V, I_{OH} = −400 μA	2.4	3.4		V
V_{OL}	Low-level output voltage		V_{CC} = MIN, V_{IL} = 0.8 V,	V_{IH} = 2 V, I_{OL} = 16 mA		0.2	0.4	V
I_I	Input current at maximum input voltage		V_{CC} = MAX,	V_I = 5.5 V			1	mA
I_{IH}	High-level input current	clock input	V_{CC} = MAX,	V_I = 2.4 V			80	μA
		other inputs					40	
I_{IL}	Low-level input current	clock input	V_{CC} = MAX,	V_I = 0.4 V			−3.2	mA
		other inputs					−1.6	
I_{OS}	Short circuit output current§		V_{CC} = MAX		−18		−55	mA
I_{CCH}	Supply current, outputs high		V_{CC} = MAX,	See Note 3		58		mA
I_{CCL}	Supply current, outputs low		V_{CC} = MAX,	See Note 4		80	120	mA

† For test conditions shown as MIN or MAX, use the appropriate value specified under recommended operating conditions.
‡ All typical values are at V_{CC} = 5 V, T_A = 25°C.
§ Not more than one output should be shorted at a time.
NOTES: 1. Voltage values are with respect to network ground terminal.
2. An SN5497 in the W package operating at free-air temperatures above 118°C requires a heat sink that provides a thermal resistance from case to free-air, $R_{\theta CA}$, of not more than 55°C/W.
3. I_{CCH} is measured with outputs open and all inputs grounded
4. I_{CCL} is measured with outputs open and all inputs at 4.5 V

TEXAS INSTRUMENTS
POST OFFICE BOX 655012 • DALLAS, TEXAS 75265

switching characteristics, V_{CC} = 5 V, T_A = 25°C, N = 10

PARAMETER†	FROM INPUT	TO OUTPUT	TEST CONDITIONS	MIN	TYP	MAX	UNIT
f_{max}			C_L = 15 pF, R_L = 400 Ω, See Figure 1	25	32		MHz
t_{PLH}	Enable	Enable			13	20	ns
t_{PHL}					14	21	
t_{PLH}	Strobe	Z			12	18	ns
t_{PHL}					15	23	
t_{PLH}	Clock	Y			26	39	ns
t_{PHL}					20	30	
t_{PLH}	Clock	Z			12	18	ns
t_{PHL}					17	26	
t_{PLH}	Rate	Z			6	10	ns
t_{PHL}					9	14	
t_{PLH}	Unity/Cascade	Y			9	14	ns
t_{PHL}					6	10	
t_{PLH}	Strobe	Y			19	30	ns
t_{PHL}					22	33	
t_{PLH}	Clock	Enable			19	30	ns
t_{PHL}					22	33	
t_{PLH}	Clear	Y			24	36	ns
t_{PHL}		Z			15	23	
t_{PLH}	Any Rate Input	Y			15	23	ns
t_{PHL}					15	23	

†f_{max} = maximum clock frequency.
t_{PLH} ≡ propagation delay time, low-to-high-level output.
t_{PHL} = propagation delay time, high-to-low-level output

TYPICAL APPLICATION DATA

This application demonstrates how the '97 can be cascaded to perform 18-bit rate multiplication. This scheme is expandable to n-bits by extending the pattern illustrated.

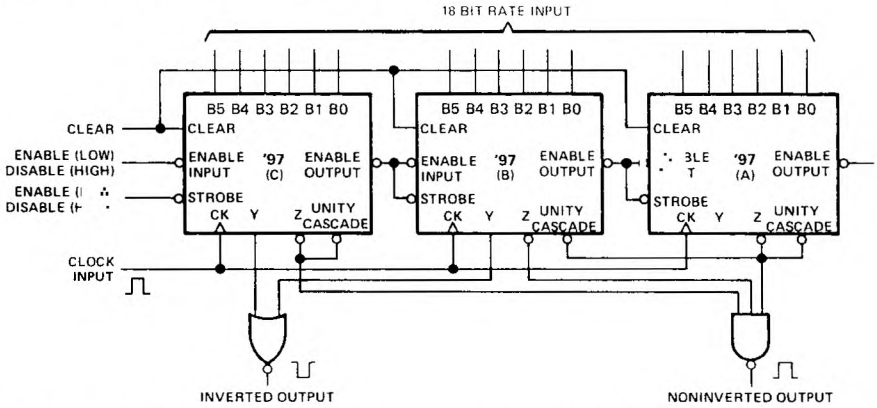

As illustrated, two of the 6-bit multipliers can be cascaded by connecting the Z output of unit A to the unity cascade input of unit B, in which case, a two-input NOR gate is used to cascade the remaining multipliers. Alternatively, all three Y outputs can be cascaded with a 3-input NOR gate. The three unused unity cascade inputs can be conveniently terminated by connecting each to its Z output.

PARAMETER MEASUREMENT INFORMATION

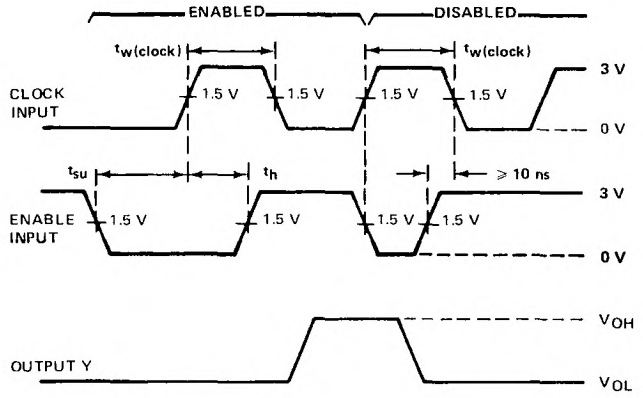

ENABLING FROM POSITIVE-GOING TRANSITION OF CLOCK PULSE

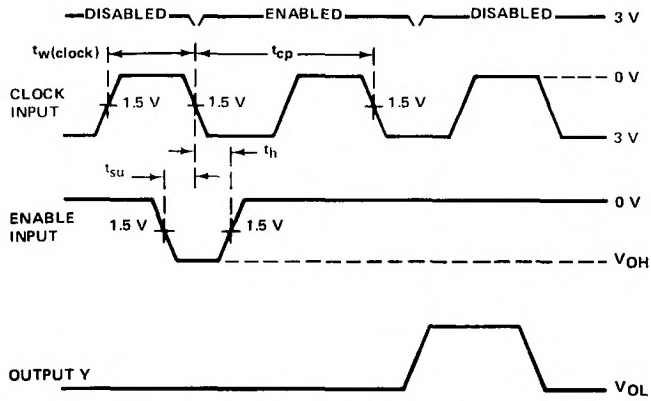

ENABLING FROM NEGATIVE-GOING TRANSITION OF PREVIOUS CLOCK PULSE

1. Unity/Cascade and pin 2 (rate input), other inputs are low. Clear the counter and apply clock and enable pulse as illustrated.
2. Setup and hold times are illustrated for enabling a single clock pulse (count). Continued application of the enable function will enable subsequent clock pulse (counts) until disabling occurs (enable goes high). The total number of counts will be determined by the total number of positive-going clock transition enabled.

NOTES: A. The input pulse generator has the following characteristics: $t_{w(clock)}$ = 20 ns, $t_{TLH} \leqslant$ 10 ns, $t_{THL} \leqslant$ 10 ns, PRR = 1 MHz, $Z_{out} \approx 50\ \Omega$.
B. C_L includes probe and jig capacitance.
C. All diodes are 1N3064 or equivalent.

FIGURE 1–SWITCHING TIMES

TEXAS INSTRUMENTS
POST OFFICE BOX 655012 • DALLAS, TEXAS 75265

PARAMETER MEASUREMENT INFORMATION

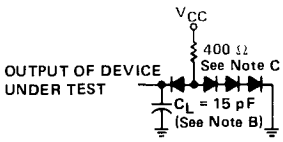

All three outputs are loaded during testing.

LOAD CIRCUIT

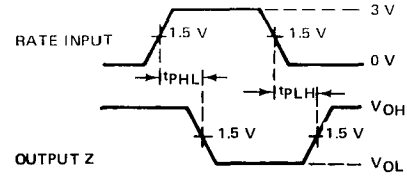

Flip-flops are at a count so that all other inputs to the gate under test are high and all other inputs, including other rate inputs, are low.

PROPAGATION DELAY TIMES, RATE INPUT TO Z

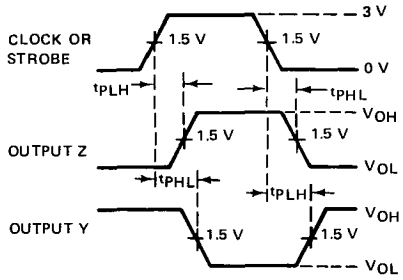

Unity/cascade and rate inputs are high, other inputs are low, and flip-flops are at any count other than maximum.

PROPAGATION DELAY TIMES, CLOCK TO Z AND Y, AND STROBE INPUT TO Z AND Y

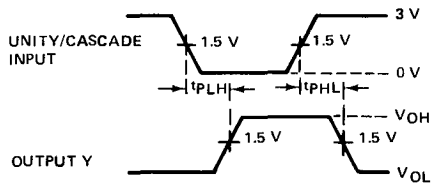

Output Z is high

PROPAGATION DELAY TIMES, UNITY/CASCADE INPUT TO Y

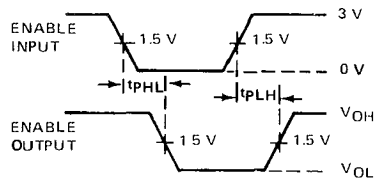

Flip-flops are at the maximum count. Other inputs are low.

PROPAGATION DELAY TIMES, ENABLE INPUT TO ENABLE OUTPUT

NOTES: A. The input pulse generator has the following characteristics: $t_{w(clock)}$ = 20 ns, $t_{TLH} \leq$ 10 ns, $t_{THL} \leq$ 10 ns, PRR = 1 MHz, $Z_{out} \approx$ 50 Ω.
B. C_L includes probe and jig capacitance.
C. All diodes are 1N3064 or equivalent.

FIGURE 1–SWITCHING TIMES (CONTINUED)

- **Package Options Include Plastic "Small Outline" Packages, Ceramic Chip Carriers, and Plastic and Ceramic DIPs**
- **Dependable Texas Instruments Quality and Reliability**

description

The '107 contain two independent J-K flip-flops with individual J-K, clock, and direct clear inputs. The '107 is a positive pulse-triggered flip-flop. The J-K input data is loaded into the master while the clock is high and transferred to the slave and the outputs on the high-to-low clock transistion. For these devices the J and K inputs must be stable while the clock is high.

The 'LS107A contain two independent negative-edge-triggered flip-flops. The J and K inputs must be stable prior to the high-to-low clock transition for predictable operation. When the clear is low, it overrides the clock and data inputs forcing the Q output low and the $\overline{Q}$ output high.

The SN54107 and the SN54LS107A are characterized for operation over the full military temperature range of −55°C to 125°C. The SN74107 and the SN74LS107A are characterized for operation from 0°C to 70°C.

SN54107, SN54LS107A . . . J PACKAGE
SN74107 . . . N PACKAGE
SN74LS107A . . . D OR N PACKAGE
(TOP VIEW)

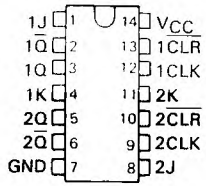

SN54LS107A . . . FK PACKAGE
(TOP VIEW)

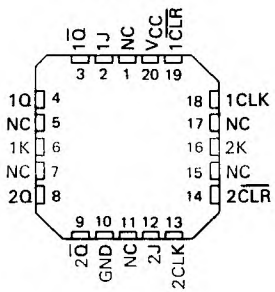

NC – No internal connection

'107
FUNCTION TABLE

INPUTS				OUTPUTS	
$\overline{CLR}$	CLK	J	K	Q	$\overline{Q}$
L	X	X	X	L	H
H	↓	L	L	Q_0	$\overline{Q}_0$
H	↓	H	L	H	L
H	↓	L	H	L	H
H	↓	H	H	TOGGLE	

'LS107A
FUNCTION TABLE

INPUTS				OUTPUTS	
$\overline{CLR}$	CLK	J	K	Q	$\overline{Q}$
L	X	X	X	L	H
H	↓	L	L	Q_0	$\overline{Q}_0$
H	↓	H	L	H	L
H	↓	L	H	L	H
H	↓	H	H	TOGGLE	
H	H	X	X	Q_0	$\overline{Q}_0$

PRODUCTION DATA documents contain information current as of publication date. Products conform to specifications per the terms of Texas Instruments standard warranty. Production processing does not necessarily include testing of all parameters.

logic diagrams (positive logic)

'107

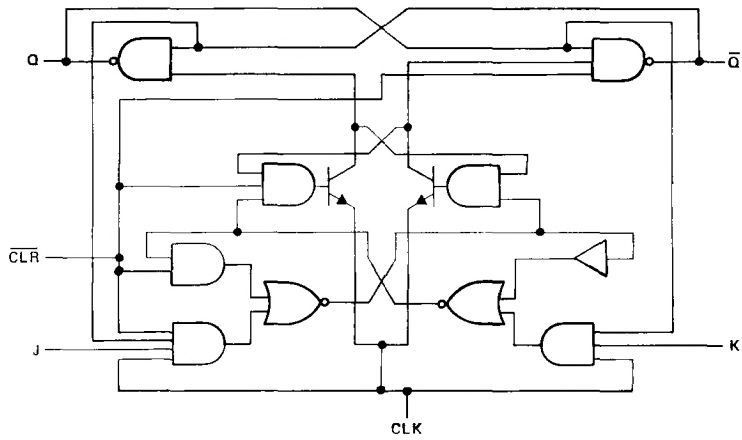

'LS107A

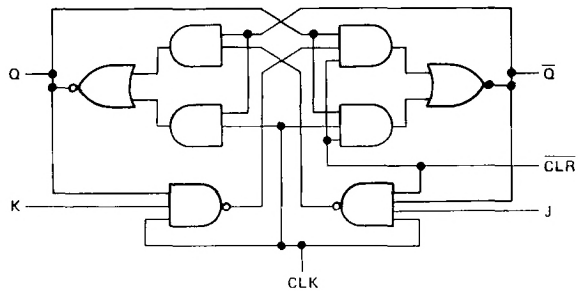

TEXAS INSTRUMENTS
POST OFFICE BOX 655012 • DALLAS, TEXAS 75265

logic symbols†

'107

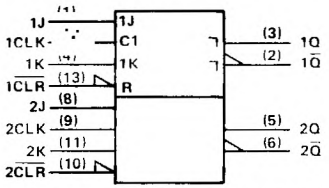

'LS107A

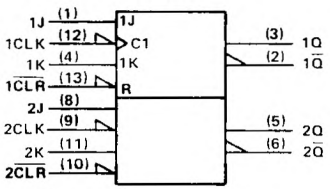

†These symbols are in accordance with ANSI/IEEE Std 91-1984 and IEC Publication 617-12.
Pin numbers shown are for D, J, and N packages.

schematic of inputs and outputs

'107

EQUIVALENT OF EACH INPUT

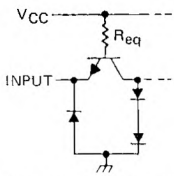

I_{IL} MAX	R_{eq} NOM
−1.6 mA	4 kΩ
−3.2 mA	**2 kΩ**

TYPICAL OF ALL INPUTS

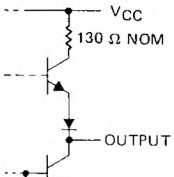

'LS107A

EQUIVALENT OF EACH INPUT

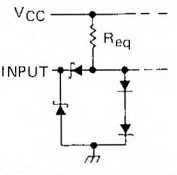

I_{IL} MAX	R_{eq} NOM
−0.4 mA	30 kΩ
−0.8 mA	**8.25 kΩ**

TYPICAL OF ALL OUTPUTS

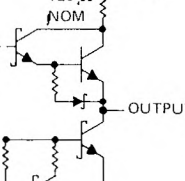

absolute maximum ratings over operating free-air temperature range (unless otherwise noted)

Supply voltage, V_{CC} (see Note 1) . . . . . 7 V
Input voltage: '107 . . . . . 5.5 V
'LS107A . . . . . 7 V
Operating free-air temperature range: SN54' . . . . . −55°C to 125°C
SN74' . . . . . 0°C to 70°C
Storage temperature range . . . . . −65°C to 150°C

NOTE 1: Voltage values are with respect to network ground terminal

recommended operating conditions

			SN54107			SN74107			UNIT
			MIN	NOM	MAX	MIN	NOM	MAX	
V_{CC}	Supply voltage		4.5	5	5.5	4.75	5	5.25	V
V_{IH}	High-level input voltage		2			2			V
V_{IL}	Low-level input voltage				0.8			0.8	V
I_{OH}	High-level output current				−0.4			−0.4	mA
I_{OL}	Low-level output current				16			16	mA
t_w	Pulse duration	CLK high	20			20			ns
		CLK low	47			47			
		$\overline{CLR}$ low	25			25			
t_{su}	Input setup time before CLK↑		0			0			ns
t_h	Input hold time-data after CLK↑		0			0			ns
T_A	Operating free-air temperature		−55		125	0		70	°C

electrical characteristics over recommended operating free-air temperature range (unless otherwise noted)

PARAMETER		TEST CONDITIONS†			SN54107			SN74107			UNIT
					MIN	TYP‡	MAX	MIN	TYP‡	MAX	
V_{IK}		V_{CC} = ···	I_I = −12 mA				−1.5			−1.5	V
V_{OH}		V_{CC} = ··· I_{OH} = −0.4 mA	V_{IH} = 2 V,	V_{IL} = 0.8 V,	2.4	3.4		2.4	3.4		V
V_{OL}		V_{CC} = MIN, I_{OL} = 16 mA	V_{IH} = 2 V,	V_{IL} = 0.8 V,		0.2	0.4		0.2	0.4	V
I_I		V_{CC} = MAX,	V_I = 5.5 V				1			1	mA
I_{IH}	J or K	V_{CC} = MAX,	V_I = 2.4 V				40			40	μA
	All other						80			80	
I_{IL}	J or K	V_{CC} = MAX,	V_I = 0.4 V				−1.6			−1.6	mA
	All other						−3.2			−3.2	
I_{OS}§		V_{CC} = MAX			−20		−57	−18		−57	mA
I_{CC}¶		V_{CC} = MAX,	See Note 2			10	20		10	20	mA

†For conditions shown as MIN or MAX, use the appropriate value specified under recommended operating conditions.
‡All typical values are at V_{CC} = 5 V, T_A = 25° C.
§Not more than one output should be shorted at a time.
¶Average per flip-flop.
NOTE 2: With all outputs open, I_{CC} is measured with the Q and $\overline{Q}$ outputs high in turn. At the time of measurement, the clock input is grounded.

switching characteristics, V_{CC} = 5 V, T_A = 25°C (see note 3)

PARAMETER	FROM (INPUT)	TO (OUTPUT)	TEST CONDITIONS	MIN	TYP	MAX	UNIT
f_{max}			R_L = 400 Ω, C_L = 15 pF	15	20		MHz
t_{PLH}	$\overline{CLR}$	$\overline{Q}$			16	25	ns
t_{PHL}		Q			25	40	ns
t_{PLH}	CLK	Q or $\overline{Q}$			16	25	ns
t_{PHL}					25	40	ns

NOTE 3: Load circuits and voltage waveforms are shown in Section 1.

TEXAS INSTRUMENTS
POST OFFICE BOX 655012 • DALLAS, TEXAS 75265

recommended operating conditions

			SN54LS107A			SN74LS107A			UNIT
			MIN	NOM	MAX	MIN	NOM	MAX	
V_{CC}	Supply voltage		4.5	5	5.5	4.75	5	5.25	V
V_{IH}	High-level input voltage		2			2			V
V_{IL}	Low-level input voltage				0.7			0.8	V
I_{OH}	High-level output current				−0.4			−0.4	mA
I_{OL}	Low-level output current				4			8	mA
f_{clock}	Clock frequency		0		30	0		30	MHz
t_w	Pulse duration	CLK high	20			20			ns
		$\overline{CLR}$ low	25			25			
t_{su}	Setup time before CLK↓	data high or low	20			20			ns
		$\overline{CLR}$ inactive	25			25			
t_h	Hold time-data after CLK↓		0			0			ns
T_A	Operating free-air temperature		−55		125	0		70	°C

electrical characteristics over recommended operating free-air temperature range (unless otherwise noted)

PARAMETER		TEST CONDITIONS†	SN54LS107A			SN74LS107A			UNIT
			MIN	TYP‡	MAX	MIN	TYP‡	MAX	
V_{IK}		V_{CC} = MIN, I_I = −18 mA			−1.5			−1.5	V
V_{OH}		V_{CC} = MIN, V_{IH} = 2 V, V_{IL} = MAX, I_{OH} = −0.4 mA	2.5	3.4		2.7	3.4		V
V_{OL}		V_{CC} = MIN, V_{IL} = MAX, V_{IH} = 2 V, I_{OL} = 4 mA		0.25	0.4		0.25	0.4	V
		V_{CC} = MIN, V_{IL} = MAX, V_{IH} = 2 V, I_{OL} = 8 mA					0.35	0.5	
I_I	J or K	V_{CC} = MAX, V_I = 7 V			0.1			0.1	mA
	CLR				0.3			0.3	
	CLK				0.4			0.4	
I_{IH}	J or K	V_{CC} = MAX, V_I = 2.7 V			20			20	μA
	CLR				60			60	
	CLK				80			80	
I_{IL}	J or K	V_{CC} = MAX, V_I = 0.4 V			−0.4			−0.4	mA
	CLR or CLK				−0.8			−0.8	
I_{OS}§		V_{CC} = MAX, See Note 4	−20		−100	−20		−100	mA
I_{CC} (Total)		V_{CC} = MAX, See Note 2		4	6		4	6	mA

†For conditions shown as MIN or MAX, use the appropriate value specified under recommended operating conditions.
‡All typical values are at V_{CC} = 5 V, T_A = 25°C.
§Not more than one output should be shorted at a time, and the duration of the short circuit should not exceed one second.
NOTE 2: With all outputs open, I_{CC} is measured with the Q and $\overline{Q}$ outputs high in turn. At the time of measurement, the clock input is grounded.
NOTE 4: For certain devices where state commutation can be caused by shorting an output to ground, an equivalent test may be performed with V_O = 2.25 V and 2.125 V for the 54 family and the 74 family, respectively, with the minimum and maximum limits reduced to one half of their stated values.

switching characteristics, V_{CC} = 5 V, T_A = 25°C (see note 3)

PARAMETER	FROM (INPUT)	TO (OUTPUT)	TEST CONDITIONS	MIN	TYP	MAX	UNIT
f_{max}			R_L = 2 kΩ, C_L = 15 pF	30	45		MHz
t_{PLH}	$\overline{CLR}$ or CLK	Q or $\overline{Q}$			15	20	ns
t_{PHL}					15	20	ns

NOTE 3: Load circuits and voltage waveforms are shown in Section 1.

DUAL J-$\overline{K}$ POSITIVE-EDGE-TRIGGERED FLIP-FLOPS WITH PRESET AND CLEAR

DECEMBER 1983 – REVISED MARCH 1988

- **Package Options Include Plastic "Small Outline" Packages, Ceramic Chip Carriers and Flat Packages, and Plastic and Ceramic DIPs**
- **Dependable Texas Instruments Quality and Reliability**

description

These devices contain two independent J-$\overline{K}$ positive-edge-triggered flip-flops. A low level at the preset or clear inputs sets or resets the outputs regardless of the levels of the other inputs. When preset and clear are inactive (high), data at the J and $\overline{K}$ inputs meeting the setup time requirements are transferred to the outputs on the positive-going edge of the clock pulse. Clock triggering occurs at a voltage level and is not directly related to the rise time of the clock pulse. Following the hold time interval, data at the J and $\overline{K}$ inputs may be changed without affecting the levels at the outputs. These versatile flip-flops can perform as toggle flip-flops by grounding $\overline{K}$ and tying J high. They also can perform as D-type flip-flops if J and $\overline{K}$ are tied together.

The SN54109 and SN54LS109A are characterized for operation over the full military temperature range of −55°C to 125°C. The SN74109 and SN74LS109A are characterized for operation from 0°C to 70°C.

FUNCTION TABLE (each flip-flop)

INPUTS					OUTPUTS	
$\overline{PRE}$	$\overline{CLR}$	CLK	J	K	Q	$\overline{Q}$
L	H	X	X	X	H	L
H	L	X	X	X	L	H
L	L	X	X	X	H†	H†
H	H	↑	L	L	L	H
H	H	↑	H	L	TOGGLE	
H	H	↑	L	H	Q_0	$\overline{Q}_0$
H	H	↑	H	H	H	L
H	H	L	X	X	Q_0	$\overline{Q}_0$

† The output levels in this configuration are not guaranteed to meet the minimum levels for V_{OH} if the lows at preset and clear are near V_{IL} maximum. Furthermore, this configuration is nonstable; that is, it will not persist when preset or clear return to their inactive (high) level.

SN54109, SN54LS109A . . . J OR W PACKAGE
SN74109 . . . N PACKAGE
SN74LS109A . . . D OR N PACKAGE
(TOP VIEW)

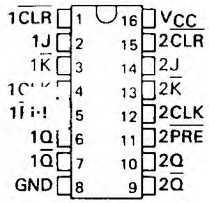

SN54LS109A . . . FK PACKAGE
(TOP VIEW)

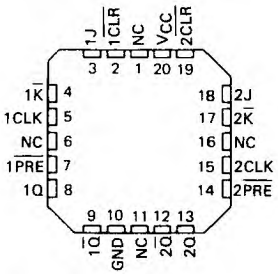

logic symbol‡

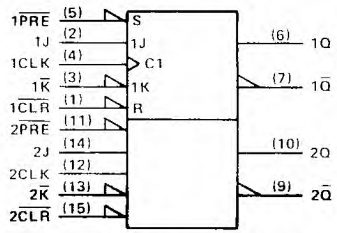

‡This symbol is in accordance with ANSI/IEEE Std 91-1984 and IEC Publication 617-12.
Pin numbers shown are for D, J, N, and W packages

2 TTL Devices

PRODUCTION DATA documents contain information current as of publication date. Products conform to specifications per the terms of Texas Instruments standard warranty. Production processing does not necessarily include testing of all parameters.

logic diagram (positive logic)

'109

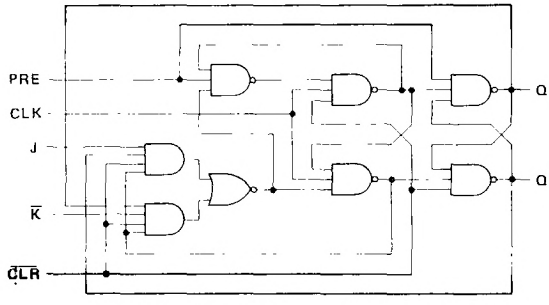

schematics of inputs and outputs

'109

EQUIVALENT OF EACH INPUT

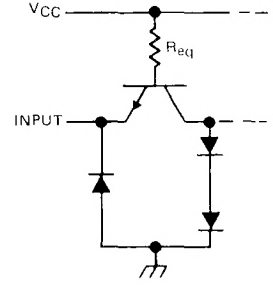

I_{IL} MAX	R_{eq} NOM
−1.6 mA	4 kΩ
−3.2 mA	2 kΩ
−4.8 mA	1.3 kΩ

TYPICAL OF ALL OUTPUTS

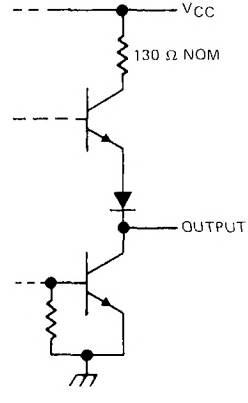

TEXAS INSTRUMENTS
POST OFFICE BOX 655012 • DALLAS, TEXAS 75265

schematic

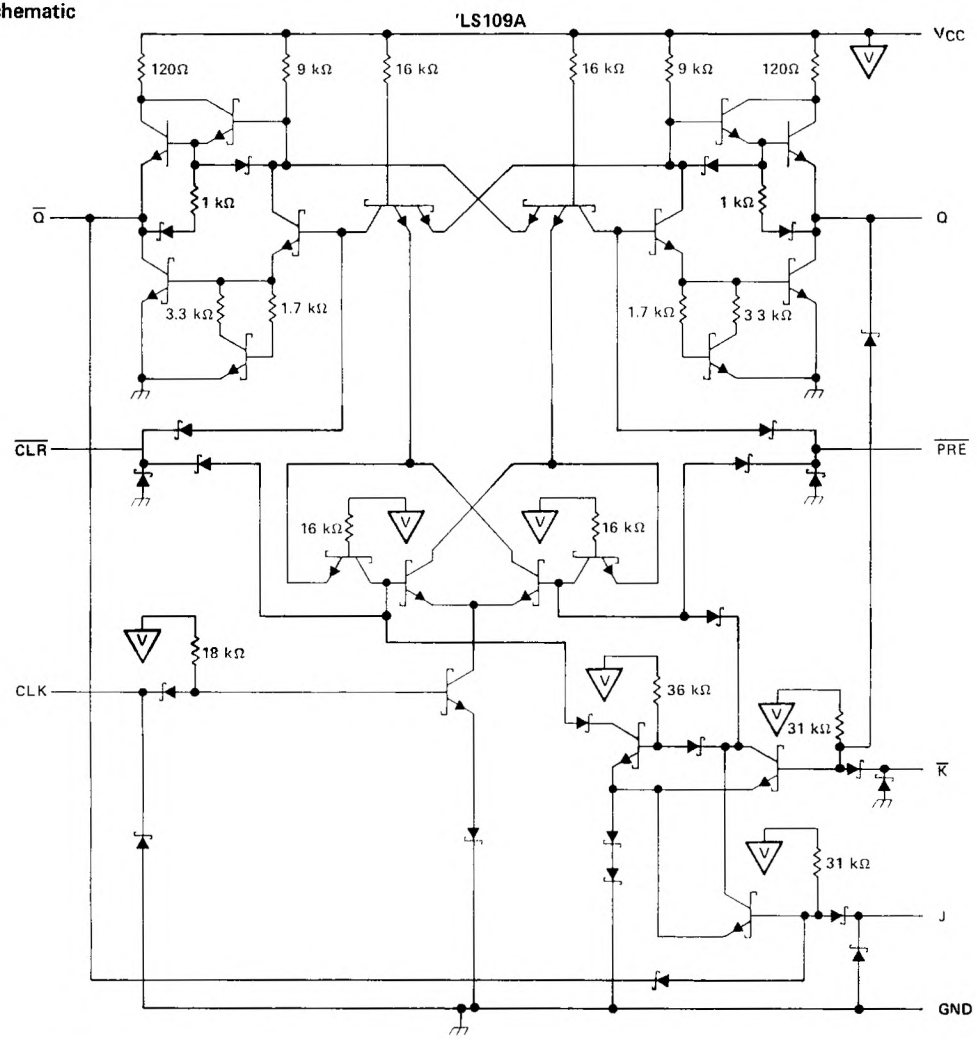

absolute maximum ratings over operating free-air temperature range (unless otherwise noted)

Supply voltage, V_{CC} (see Note 1) . . . . . 7 V
Input voltage: '109 . . . . . 5.5 V
'LS109A . . . . . 7 V
Operating free-air temperature range: SN54' . . . . . −55°C to 125°C
SN74' . . . . . 0°C to 70°C
Storage temperature range . . . . . −65°C to 150°C

NOTE 1: Voltage values are with respect to network ground terminal.

recommended operating conditions

			SN54109			SN74109			UNIT
			MIN	NOM	MAX	MIN	NOM	MAX	
V_{CC}	Supply voltage		4.5	5	5.5	4.75	5	5.25	V
V_{IH}	High-level input voltage		2			2			V
V_{IL}	Low-level input voltage				0.8			0.8	V
I_{OH}	High-level output current				−0.8			−0.8	mA
I_{OL}	Low-level output current				16			16	mA
t_w	Pulse duration	CLK high or low	20			20			ns
		$\overline{PRE}$ or $\overline{CLR}$ low	20			20			
t_{su}	Input setup time before CLK↑		10			10			ns
t_h	Input hold time-data after CLK↑		6			6			ns
T_A	Operating free-air temperature		−55		125	0		70	°C

electrical characteristics over recommended operating free-air temperature range (unless otherwise noted)

PARAMETER		TEST CONDITIONS†			SN54109			SN74109			UNIT
					MIN	TYP‡	MAX	MIN	TYP‡	MAX	
V_{IK}		V_{CC} = MIN,	I_I = −12 mA				−1.5			−1.5	V
V_{OH}		V_{CC} = MIN, I_{OH} = −0.8 mA	V_{IH} = 2 V,	V_{IL} = 0.8 V,	2.4	3.4		2.4	3.4		V
V_{OL}		V_{CC} = MIN, I_{OL} = 16 mA	V_{IH} = 2 V,	V_{IL} = 0.8 V,		0.2	0.4		0.2	0.4	V
I_I		V_{CC} = MAX,	V_I = 5.5 V				1			1	mA
I_{IH}	J or $\overline{K}$	V_{CC} = MAX,	V_I = 2.4 V				40			40	μA
	$\overline{PRE}$						160			160	
	$\overline{CLR}$ or CLK						80			80	
I_{IL}	J or $\overline{K}$	V_{CC} = MAX,	V_I = 0.4 V				−1.6			−1.6	mA
	$\overline{PRE}$						−4.8			−4.8	
	$\overline{CLR}$						−3.2			−3.2	
	CLK						−3.2			−3.2	
I_{OS}§		V_{CC} = MAX			−30		−85	−30		−85	mA
I_{CC}#		V_{CC} = MAX,	See Note 2			9	15		9	15	mA

† For conditions shown as MIN or MAX, use the appropriate value specified under recommended operating conditions.
‡ All typical values are at V_{CC} = 5 V, T_A = 25°C.
§ Not more than one output should be shorted at a time.
¶ Clear is tested with preset high and preset is tested with clear high.
# Average per flip-flop.
NOTE 2: With all outputs open, I_{CC} is measured with the Q and $\overline{Q}$ outputs high in turn. At the time of measurement, the clock input is grounded.

switching characteristics, V_{CC} = 5 V, T_A = 25°C (see note 3)

PARAMETER	FROM (INPUT)	TO (OUTPUT)	TEST CONDITIONS	MIN	TYP	MAX	UNIT
f_{max}			R_L = 400 Ω, C_L = 15 pF	25	33		MHz
t_{PLH}	$\overline{PRE}$	Q			10	15	ns
t_{PHL}		$\overline{Q}$			23	35	ns
t_{PLH}	$\overline{CLR}$	$\overline{Q}$			10	15	ns
t_{PHL}		Q			17	25	ns
t_{PLH}	CLK	Q or $\overline{Q}$			10	16	ns
t_{PHL}					18	28	ns

NOTE 3: Load circuits and voltage waveforms are shown in Section 1

TEXAS INSTRUMENTS
POST OFFICE BOX 655012 • DALLAS, TEXAS 75265

recommended operating conditions

			SN54LS109A			SN74LS109A			UNIT
			MIN	NOM	MAX	MIN	NOM	MAX	
V_{CC}	Supply voltage		4.5	5	5.5	4.75	5	5.25	V
V_{IH}	High-level input voltage		2			2			V
V_{IL}	Low-level input voltage				0.7			0.8	V
I_{OH}	High-level output current				−0.4			−0.4	mA
I_{OL}	Low-level output current				4			8	mA
f_{clock}	Clock frequency		0		25	0		25	MHz
t_w	Pulse duration	CLK high	25			25			ns
		$\overline{PRE}$ or $\overline{CLR}$ low	25			25			
t_{su}	Setup time before CLK ↑	High-level data	35			35			ns
		Low-level data	25			25			
t_h	Hold time-data after CLK ↑		5			5			ns
T_A	Operating free-air temperature		−55		125	0		70	°C

electrical characteristics over recommended operating free-air temperature range (unless otherwise noted)

PARAMETER		TEST CONDITIONS†			SN54						UNIT
					MIN	TYP‡	MAX	MIN	TYP‡	MAX	
V_{IK}		V_{CC} = MIN,	I_I = −18 mA				−1.5			−1.5	V
V_{OH}		V_{CC} = MIN, I_{OH} = −0.4 mA	V_{IH} = 2 V,	V_{IL} = MAX,	2.5	3.4		2.7	3.4		V
V_{OL}		V_{CC} = MIN, I_{OL} = 4 mA	V_{IL} = MAX,	V_{IH} = 2 V,		0.25	0.4		0.25	0.4	V
		V_{CC} = MIN, I_{OL} = 8 mA	V_{IL} = MAX,	V_{IH} = 2 V,					0.35	0.5	
I_I	J, $\overline{K}$ or CLK	V_{CC} = MAX,	V_I = 7 V				0.1			0.1	mA
	$\overline{CLR}$ or $\overline{PRE}$						0.2			0.2	
I_{IH}	J, $\overline{K}$ or CLK	V_{CC} = MAX,	V_I = 2.7 V				20			20	μA
	$\overline{CLR}$ or $\overline{PRE}$						40			40	
I_{IL}	J, $\overline{K}$ or CLK	V_{CC} = MAX,	V_I = 0.4 V				−0.4			−0.4	mA
	$\overline{CLR}$ or $\overline{PRE}$						−0.8			−0.8	
I_{OS}§		V_{CC} = MAX,	See Note 4		−20		−100	−20		−100	mA
I_{CC} (Total)		V_{CC} = MAX,	See Note 2			4	8		4	8	mA

† For conditions shown as MIN or MAX, use the appropriate value specified under recommended operating conditions.
‡ All typical values are at V_{CC} = 5 V, T_A = 25°C.
§ Not more than one output should be shorted at a time, and the duration of the short circuit should not exceed one second.
NOTE 2: With all outputs open, I_{CC} is measured wtih the Q and $\overline{Q}$ outputs high in turn. At the time of measurement, the clock input is grounded.
NOTE 4: For certain devices where state commutation can be caused by shorting an output to ground, an equivalent test may be performed with V_O = 2.25 V and 2.125 V for the 54 family and the 74 family, respectively with the minimum and maximum limits reduced to one half of their stated values.

switching characteristics, V_{CC} = 5 V, T_A = 25°C (see note 3)

PARAMETER	FROM (INPUT)	TO (OUTPUT)	TEST CONDITIONS	MIN	TYP	MAX	UNIT
f_{max}			R_L = 2 kΩ, C_L = 15 pF	25	33		MHz
t_{PLH}	$\overline{CLR}$, $\overline{PRE}$ or CLK	Q or $\overline{Q}$			13	25	ns
t_{PHL}					25	40	ns

NOTE 3: Load circuits and voltage waveforms are shown in Section 1.

- **Package Options Include Plastic and Ceramic DIPs and Ceramic Flat Packages**
- **Dependable Texas Instruments Quality and Reliability**

description

The SN54111 and SN74111 are d-c coupled, variable-skew, J-K flip-flops which utilize TTL circuitry to obtain 25-MHz performance typically. They are termed "variable-skew" because they allow the maximum clock skew in a system to be a direct function of the clock pulse width. The J and K inputs are enabled to accept data only during a short period (30 nanoseconds maximum hold time) starting with, and immediately following the rising edge of the clock pulse. After this, inputs may be changed while the clock is at the high level without affecting the state of the master. At the threshold level of the falling edge of the clock pulse, the data stored in the master will be transferred to the output. The effective allowable clock skew then is minimum propagation delay time minus hold time, plus clock pulse width. This means that the system designer can set the maximum allowable clock skew needed by varying the clock pulse width. Thus system design is made easier and the requirements for sophisticated clock distribution systems are minimized or, in some cases, entirely eliminated. These flip-flops have an additional feature-the synchronous input has reduced sensitivity to data change while the clock is high because the data need be present for only a short period of time and the system's susceptibility to noise is thereby effectively reduced.

The SN54111 is characterized for operation over the full military temperature range of −55°C to 125°C; the SN74111 is characterized for operation from 0°C to 70°C.

FUNCTION TABLE

INPUTS					OUTPUTS	
$\overline{PRE}$	$\overline{CLR}$	CLK	J	K	Q	$\overline{Q}$
L	H	X	X	X	H	L
H	L	X	X	X	L	H
L	L	X	X	X	H‡	H‡
H	H	⊓	L	L	Q_0	$\overline{Q}_0$
H	H	⊓	H	L	H	L
H	H	⊓	L	H	L	H
H	H	⊓	H	H	TOGGLE	

‡This configuration is non-stable; that is, it will not persist when preset or clear return to their inactive (high) level

SN54111 . . . J PACKAGE
SN74111 . . . N PACKAGE
(TOP VIEW)

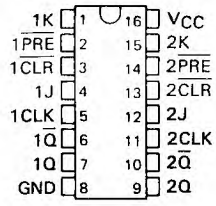

logic symbol†

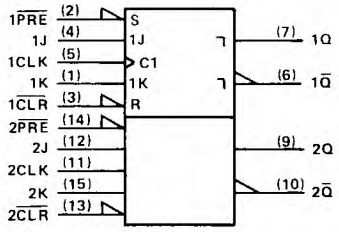

†This symbol is in accordance with ANSI/IEEE Std 91-1984 and IEC Publication 617-12.

2 TTL Devices

PRODUCTION DATA documents contain information current as of publication date. Products conform to specifications per the terms of Texas Instruments standard warranty. Production processing does not necessarily include testing of all parameters.

logic diagram (positive logic)

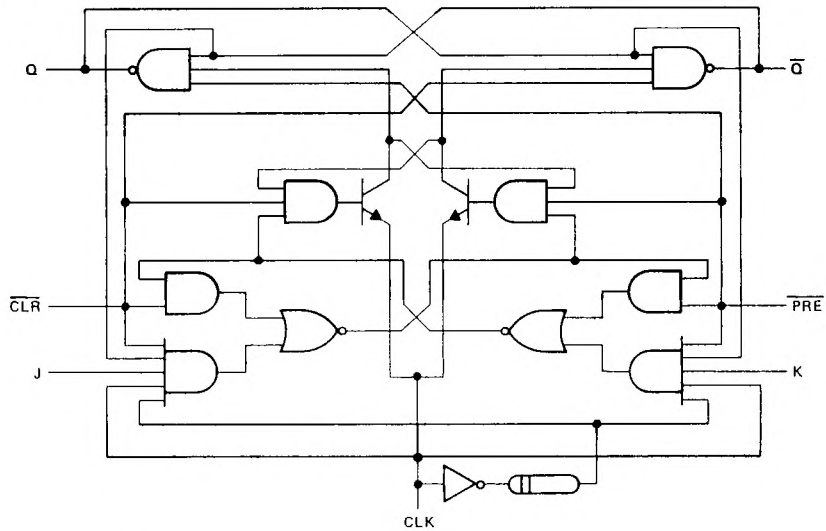

schematics of inputs and outputs

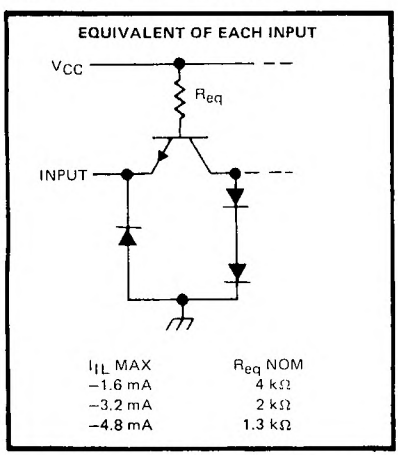

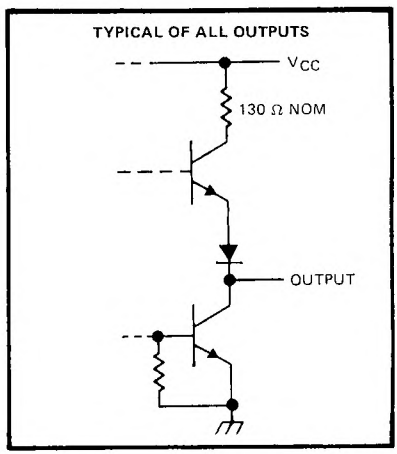

absolute maximum ratings over operating free-air temperature range (unless otherwise noted)

Supply voltage, V_{CC} (see Note 1) . . . . . 7 V
Input voltage . . . . . 5.5 V
Operating free-air temperature range: SN54111 . . . . . −55°C to 125°C
SN74111 . . . . . 0°C to 70°C
Storage temperature range . . . . . −65°C to 150°C

NOTE 1: Voltage values are with respect to network ground terminal.

TEXAS INSTRUMENTS
POST OFFICE BOX 655012 • DALLAS, TEXAS 75265

recommended operating conditions

			SN54111			SN74111			UNIT
			MIN	NOM	MAX	MIN	NOM	MAX	
V_{CC}	Supply voltage		4.5	5	5.5	4.75	5	5.25	V
V_{IH}	High-level input voltage		2			2			V
V_{IL}	Low-level input voltage				0.8			0.8	V
I_{OH}	High-level output current				−0.8			−0.8	mA
I_{OL}	Low-level output current				16			16	mA
t_w	Pulse duration	CLK high or low	25			25			ns
		$\overline{PRE}$ or $\overline{CLR}$ low	25			25			
t_{su}	Input setup time before CLK↑		0			0			ns
t_h	Input hold time data after CLK↑		30			30			ns
T_A	Operating free-air temperature		−55		125	0		70	°C

electrical characteristics over recommended operating free-air temperature range (unless otherwise noted)

PARAMETER		TEST CONDITIONS†	SN54111			SN74111			UNIT
			MIN	TYP‡	MAX	MIN	TYP‡	MAX	
V_{IK}		V_{CC} = MIN, I_I = −12 mA			−1.5			−1.5	V
V_{OH}		V_{CC} = MIN, V_{IH} = 2 V, V_{IL} = 0.8 V, I_{OH} = −0.8 mA	2.4	3.4		2.4	3.4		V
V_{OL}		V_{CC} = MIN, V_{IH} = 2 V, V_{IL} = 0.8 V, I_{OL} = 16 mA		0.2	0.4		0.2	0.4	V
I_I		V_{CC} = MAX, V_I = 5.5 V			1			1	mA
I_{IH}	J or K	V_{CC} = MAX, V_I = 2.4 V			40			40	μA
	$\overline{CLR}$ or $\overline{PRE}$				80			80	
	CLK				120			120	
I_{IL}	J or K	V_{CC} = MAX, V_I = 0.4 V			−1.6			−1.6	mA
	$\overline{CLR}$				−3.2			−3.2	
	$\overline{PRE}$¶				−3.2			−3.2	
	CLK				−4.8			−4.8	
I_{OS}§		V_{CC} = MAX	−20		−57	−18		−57	mA
I_{CC}#		V_{CC} = MAX, See Note 2		14	20.5		14	20.5	mA

† For conditions shown as MIN or MAX, use the appropriate value specified under recommended operating conditions.
‡ All typical values are at V_{CC} = 5 V, T_A = 25°C.
§ Not more than one output should be shorted at a time.
¶ Clear is tested with preset high and preset is tested with clear high.
# Average per flip-flop.
NOTE 2: With all outputs open, I_{CC} is measured with the Q and $\overline{Q}$ outputs high in turn. At the time of measurement, the clock input is at 4.5 V.

switching characteristics, V_{CC} = 5 V, T_A = 25°C (see note 3)

PARAMETER	FROM (INPUT)	TO (OUTPUT)	TEST CONDITIONS	MIN	TYP	MAX	UNIT
f_{max}				20	25		MHz
t_{PLH}	$\overline{PRE}$ or $\overline{CLR}$	Q or $\overline{Q}$	R_L = 400 Ω, C_L = 15 pF		12	18	ns
t_{PHL}					21	30	ns
t_{PLH}	CLK	Q or $\overline{Q}$			12	17	ns
t_{PHL}					20	30	ns

NOTE 3: Load circuits and voltage waveforms are shown in Section 1.

D2661, APRIL 1982 – REVISED MARCH 1988

- **Fully Buffered to Offer Maximum Isolation from External Disturbance**
- **Package Options Include Plastic "Small Outline" Packages, Ceramic Chip Carriers and Flat Packages, and Plastic and Ceramic DIPs**
- **Dependable Texas Instruments Quality and Reliability**

description

These devices contain two independent J-K negative-edge-triggered flip-flops. A low level at the preset and clear inputs sets or resets the outputs regardless of the levels of the other inputs. When preset and clear are inactive (high), data at the J and K inputs meeting the setup time requirements are transferred to the outputs on the negative-going edge of the clock pulse. Clock triggering occurs at a voltage level and is not directly related to the rise time of the clock pulse. Following the hold time interval, data at the J and K inputs may be changed without affecting the levels at the outputs. These versatile flip-flops can perform as toggle flip-flops by tying J and K high.

The SN54LS112A and SN54S112 are characterized for operation over the full military temperature range of −55°C to 125°C. The SN74LS112A and SN74S112A are characterized for operation from 0°C to 70°C.

FUNCTION TABLE (each flip-flop)

INPUTS					OUTPUTS	
$\overline{PRE}$	$\overline{CLR}$	CLK	J	K	Q	$\overline{Q}$
L	H	X	X	X	H	L
H	L	X	X	X	L	H
L	L	X	X	X	H†	H†
H	H	↓	L	L	Q_0	$\overline{Q}_0$
H	H	↓	H	L	H	L
H	H	↓	L	H	L	H
H	H	↓	H	H	TOGGLE	
H	H	H	X	X	Q_0	$\overline{Q}_0$

† The output levels in this configuration are not guaranteed to meet the minimum levels for V_{OH} if the lows at preset and clear are near V_{IL} minimum. Furthermore, this configuration is nonstable, that is, it will not persist when either preset or clear returns to its inactive (high) level.

SN54LS112A, SN54S112 . . . J OR W PACKAGE
SN74LS112A, SN74S112A . . . D OR N PACKAGE
(TOP VIEW)

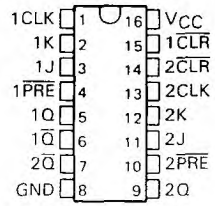

SN54LS112A, SN54S112 . . . FK PACKAGE
(TOP VIEW)

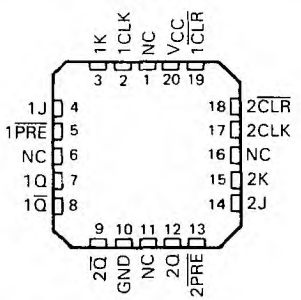

NC – No internal connection

logic symbol‡

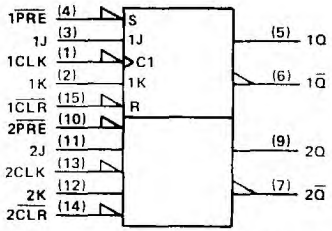

‡ This symbol is in accordance with ANSI/IEEE Std 91-1984 and IEC Publication 617-12.

Pin numbers shown are for D, J, N, and W packages.

PRODUCTION DATA documents contain information current as of publication date. Products conform to specifications per the terms of Texas Instruments standard warranty. Production processing does not necessarily include testing of all parameters.

Copyright © 1982, Texas Instruments Incorporated

logic diagrams (positive logic)

'LS112A

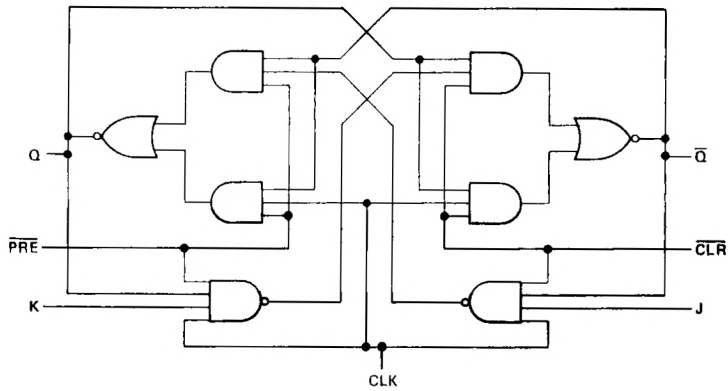

SN54S112, SN74LS112A

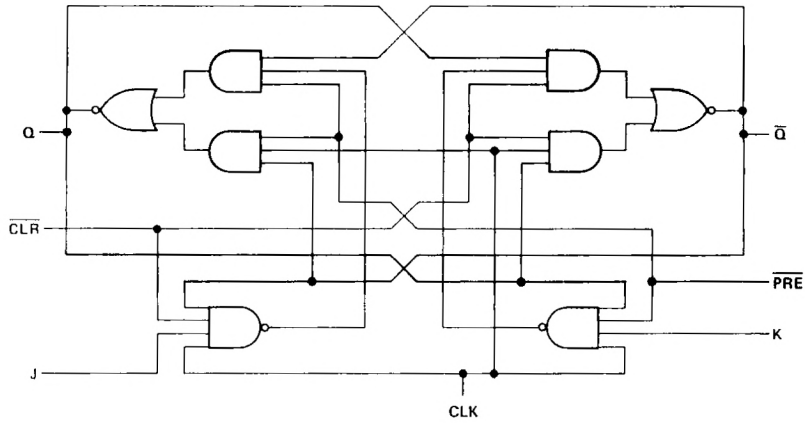

TEXAS INSTRUMENTS
POST OFFICE BOX 655012 • DALLAS, TEXAS 75265

schematics of inputs and outputs

'LS112A

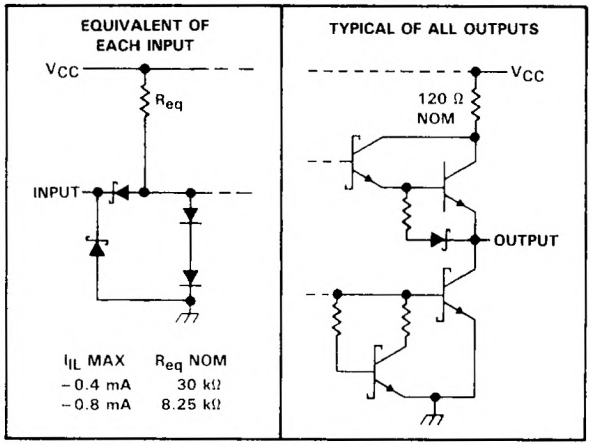

SN54S112, SN74S112A

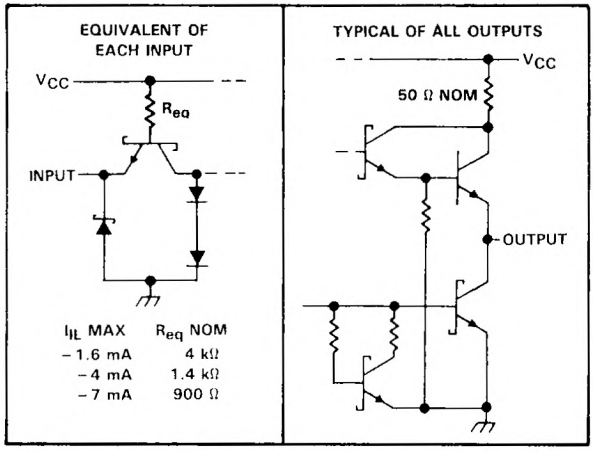

absolute maximum ratings over operating free-air temperature range (unless otherwise noted)

Supply voltage, V_{CC} (see Note 1) . . . . . 7 V
Input voltage: 'LS112A . . . . . 7 V
SN54LS112, SN74LS112A . . . . . 5.5 V
Operating free-air temperature range: SN54' . . . . . −55°C to 125°C
SN74' . . . . . 0°C to 70°C
Storage temperature range . . . . . −65°C to 150°C

NOTE 1: Voltage values are with respect to network ground terminal.

recommended operating conditions

			SN54LS112A			SN74LS112A			UNIT
			MIN	NOM	MAX	MIN	NOM	MAX	
V_{CC}	Supply voltage		4.5	5	5.5	4.75	5	5.25	V
V_{IH}	High-level input voltage		2			2			V
V_{IL}	Low-level input voltage				0.7			0.8	V
I_{OH}	High-level output current				−0.4			−0.4	mA
I_{OL}	Low-level output current				4			8	mA
f_{clock}	Clock frequency		0		30	0		30	MHz
t_w	Pulse duration	CLK high	20			20			ns
		$\overline{PRE}$ or $\overline{CLR}$ low	25			25			
t_{su}	Set up time-before CLK↓	Data high or low	20			20			ns
		$\overline{CLR}$ inactive	25			25			
		$\overline{PRE}$ inactive	20			20			
t_h	Hold time-data after CLK↓		0			0			ns
T_A	Operating free-air temperature		−55		125	0		70	°C

electrical characteristics over recommended operating free-air temperature range (unless otherwise noted)

PARAMETER		TEST CONDITIONS†			SN54LS112A			SN74LS112A			UNIT
					MIN	TYP‡	MAX	MIN	TYP‡	MAX	
V_{IK}		V_{CC} = MIN,	I_I = −18 mA				−1.5			−1.5	V
V_{OH}		V_{CC} = MIN, I_{OH} = −0.4 mA	V_{IH} = 2 V,	V_{IL} = MAX,	2.5	3.4		2.7	3.4		V
V_{OL}		V_{CC} = MIN, I_{OL} = 4 mA	V_{IL} = MAX,	V_{IH} = 2 V,		0.25	0.4		0.25	0.4	V
		V_{CC} = MIN, I_{OL} = 8 mA	V_{IL} = MAX,	V_{IH} = 2 V,					0.35	0.5	
I_I	J or K	V_{CC} = MAX,	V_I = 7 V				0.1			0.1	mA
	$\overline{CLR}$ or $\overline{PRE}$						0.3			0.3	
	CLK						0.4			0.4	
I_{IH}	J or K	V_{CC} = MAX,	V_I = 2.7 V				20			20	μA
	$\overline{CLR}$ or $\overline{PRE}$						60			60	
	CLK						80			80	
I_{IL}	J or K	V_{CC} = MAX,	V_I = 0.4 V				−0.4			−0.4	mA
	All other						−0.8			−0.8	
I_{OS}§		V_{CC} = MAX,	see Note 2		−20		−100	−20		−100	mA
I_{CC} (Total)		V_{CC} = MAX,	see Note 3			4	6		4	6	mA

† For conditions shown as MIN or MAX, use the appropriate value specified under recommended operating conditions.
‡ All typical values are at V_{CC} = 5 V, T_A = 25°C.
§ Not more than one output should be shorted at a time, and the duration of the short-circuit should not exceed one second.
NOTES: 2. For certain devices where state commutation can be caused by shorting an output to ground, an equivalent test may be performed with V_O = 2.25 V and 2.125 V for the '54 family and the '74 family, respectively, with the minimum and maximum limits reduced to one half of their stated values.
3. With all outputs open, I_{CC} is measured with the Q and $\overline{Q}$ outputs high in turn. At the time of measurement, the clock input is grounded.

TEXAS INSTRUMENTS
POST OFFICE BOX 655012 • DALLAS, TEXAS 75265

switching characteristics, V_{CC} = 5 V, T_A = 25°C (see Note 4)

PARAMETER	FROM (INPUT)	TO (OUTPUT)	TEST CONDITIONS	MIN	TYP	MAX	UNIT
f_{max}			R_L = 2 kΩ, C_L = 15 pF	30	45		MHz
t_{PLH}	$\overline{CLR}$, $\overline{PRE}$ or CLK	Q or $\overline{Q}$			15	20	ns
t_{PHL}					15	20	ns

NOTE 4: Load circuits and voltage waveforms are shown in Section 1.

recommended operating conditions

			SN54S112			SN74S112A			UNIT
			MIN	NOM	MAX	MIN	NOM	MAX	
V_{CC}	Supply voltage		4.5	5	5.5	4.75	5	5.25	V
V_{IH}	High-level input voltage		2			2			V
V_{IL}	Low-level input voltage				0.8			0.8	V
I_{OH}	High-level output current				−1			−1	mA
I_{OL}	Low-level output current				20			20	mA
t_w	Pulse duration	CLK high	6			6			ns
		CLK low	6.5			6.5			
		$\overline{PRE}$ or $\overline{CLR}$ low	8			8			
t_{su}	Set up time-before CLK↓	Data high or low	7			7			ns
t_h	Hold time-data after CLK↓		0			0			ns
T_A	Operating free-air temperature		−55		125	0		70	°C

electrical characteristics over recommended operating free-air temperature range (unless otherwise noted)

PARAMETER		TEST CONDITIONS†	SN54S112			SN74S112A			UNIT
			MIN	TYP‡	MAX	MIN	TYP‡	MAX	
V_{IK}		V_{CC} = MIN, I_I = −18 mA			−1.2			−1.2	V
V_{OH}		V_{CC} = MIN, V_{IH} = 2 V, V_{IL} = MAX, I_{OH} = −1 mA	2.5	3.4		2.7	3.4		V
V_{OL}		V_{CC} = MIN, V_{IH} = 2 V, V_{IL} = 0.8 V, I_{OL} = 20 mA			0.5			0.5	V
I_I		V_{CC} = MAX, V_I = 5.5 V			1			1	mA
I_{IH}	J or K	V_{CC} = MAX, V_I = 2.7 V			50			50	μA
	All other							100	
I_{IL}	J or K	V_{CC} = MAX, V_I = 0.5 V			−1.6			−1.6	mA
	$\overline{CLR}$§				−7			−7	
	$\overline{PRE}$§				−7			−7	
	CLK				−4			−4	
I_{OS}¶		V_{CC} = MAX	−40		−100	−40		−100	mA
I_{CC}#		V_{CC} = MAX, see Note 3		15	25		15	25	mA

† For conditions shown as MIN or MAX, use the appropriate value specified under recommended operating conditions.
‡ All typical values are at V_{CC} = 5 V, T_A = 25°C.
§ *Clear* is tested with preset high and preset is tested with clear high.
¶ Not more than one output should be shorted at a time, and the duration of the short-circuit should not exceed one second.
# Values are average per flip-flop.
NOTE 3: With all outputs open, I_{CC} is measured with the Q and $\overline{Q}$ outputs high in turn. At the time of measurement, the clock input is grounded

TEXAS INSTRUMENTS
POST OFFICE BOX 655012 • DALLAS, TEXAS 75265

switching characteristics, V_{CC} = 5 V, T_A = 25°C (see Note 4)

PARAMETER	FROM (INPUT)	TO (OUTPUT)	TEST CONDITIONS	MIN	TYP	MAX	UNIT
f_{max}			R_L = 280 Ω, C_L = 15 pF	80	125		MHz
t_{PLH}	$\overline{PRE}$ or $\overline{CLR}$	Q or $\overline{Q}$			4	7	ns
t_{PHL}	$\overline{PRE}$ or $\overline{CLR}$ (CLK high)	$\overline{Q}$ or Q			5	7	ns
	$\overline{PRE}$ or $\overline{CLR}$ (CLK low)				5	7	
t_{PLH}	CLK	Q or $\overline{Q}$			4	7	ns
t_{PHL}					5	7	ns

NOTE 4: Load circuits and voltage waveforms are shown in Section 1.

D2661, APRIL 1982 – REVISED MARCH 1988

- **Fully Buffered to Offer Maximum Isolation from External Disturbance**
- **Package Options Include Plastic "Small Outline" Packages, Ceramic Chip Carriers and Flat Packages, and Plastic and Ceramic DIPs**
- **Dependable Texas Instruments Quality and Reliability**

SN54LS113A, SN54S113 . . . J OR W PACKAGE
SN74LS113A, SN74S113A . . . D OR N PACKAGE
(TOP VIEW)

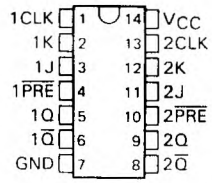

SN54LS113A, SN54S113 . . . FK PACKAGE
(TOP VIEW)

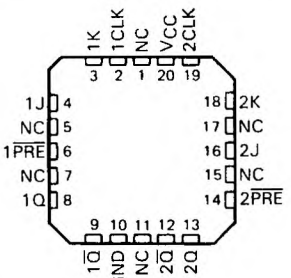

NC – No internal connection

description

These devices contain two independent J-K negative-edge-triggered flip-flops. A low level at the preset input sets the outputs regardless of the levels of the other inputs. When preset ($\overline{PRE}$) is inactive (high), data at the J and K inputs meeting the setup time requirements are transferred to the outputs on the negative-going edge of the clock pulse. Clock triggering occurs at a voltage level and is not directly related to the rise time of the clock pulse. Following the hold time interval, data at the J and K inputs may be changed without affecting the levels at the outputs. These versatile flip-flops can perform as toggle flip-flops by tying J and K high.

The SN54LS113A and SN54S113 are characterized for operation over the full military temperature range of −55°C to 125°C. The SN74LS113A and SN74S113A are characterized for operation from 0°C to 70°C.

FUNCTION TABLE (each flip-flop)

INPUTS				OUTPUTS	
$\overline{PRE}$	CLK	J	K	Q	$\overline{Q}$
L	X	X	X	H	L
H	↓	L	L	Q_0	$\overline{Q}_0$
H	↓	H	L	H	L
H	↓	L	H	L	H
H	↓	H	H	TOGGLE	
H	H	X	X	Q_0	$\overline{Q}_0$

logic symbol†

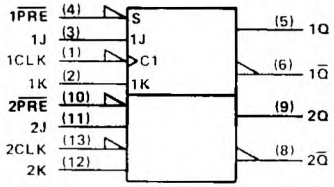

†This symbol is in accordance with ANSI/IEEE Std 91-1984 and IEC Publication 617-12.
Pin numbers shown are for D, J, N, and W packages.

PRODUCTION DATA documents contain information current as of publication date. Products conform to specifications per the terms of Texas Instruments standard warranty. Production processing does not necessarily include testing of all parameters.

Copyright © 1982, Texas Instruments Incorporated

logic diagrams (positive logic)

'LS113A

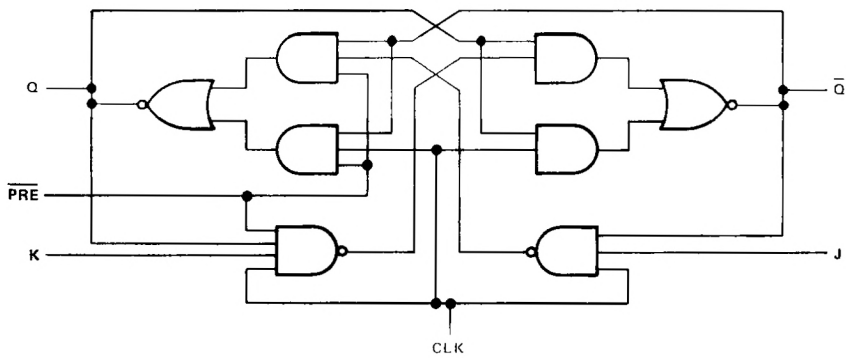

SN54S113, SN74S113A

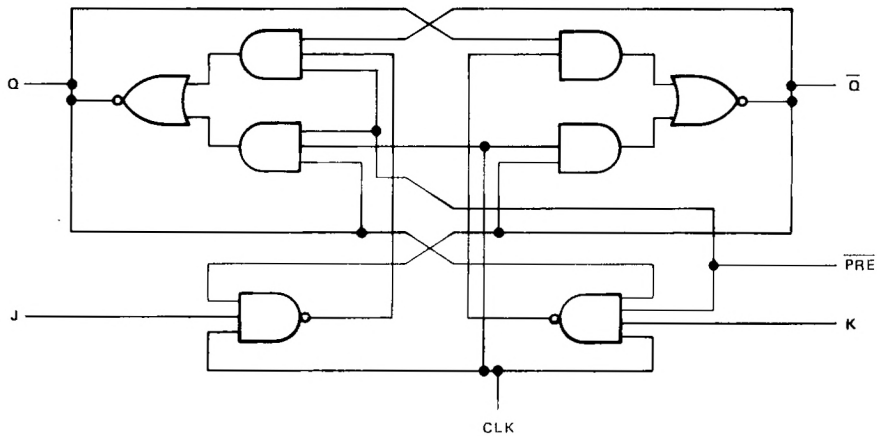

schematics of inputs and outputs

'LS113A

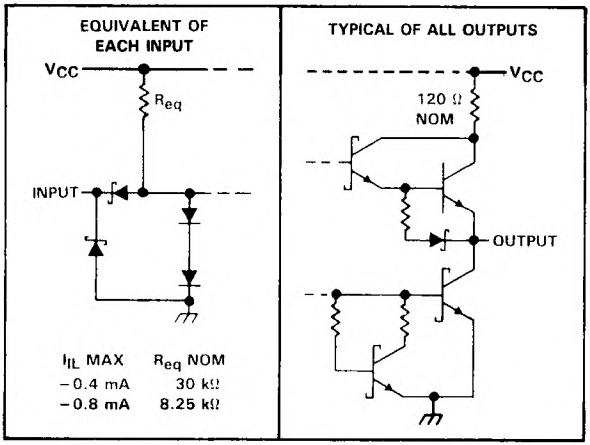

SN54S113, SN74S113A

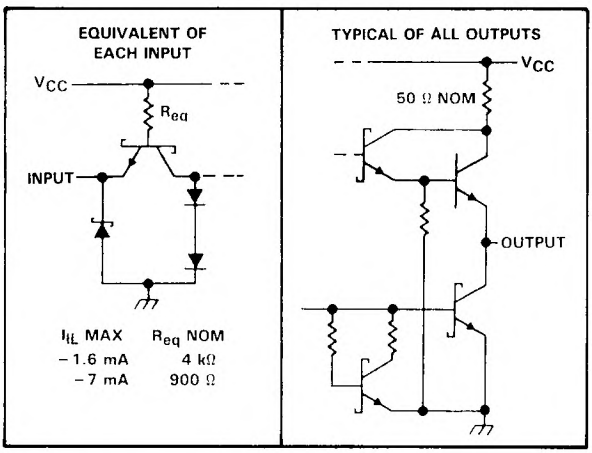

absolute maximum ratings over operating free-air temperature range (unless otherwise noted)

Supply voltage, V_{CC} (see Note 1) . . . . . 7 V
Input voltage: 'LS113A . . . . . 7 V
SN54S113, SN74S113A . . . . . 5.5 V
Operating free-air temperature range: SN54' . . . . . −55°C to 125°C
SN74' . . . . . 0°C to 70°C
Storage temperature range . . . . . −65°C to 150°C

NOTE 1: Voltage values are with respect to network ground terminals.

recommended operating conditions

			SN54LS113A			SN74LS113A			UNIT
			MIN	NOM	MAX	MIN	NOM	MAX	
V_{CC}	Supply voltage		4.5	5	5.5	4.75	5	5.25	V
V_{IH}	High-level input voltage		2			2			V
V_{IL}	Low-level input voltage				0.7			0.8	V
I_{OH}	High-level output current				−0.4			−0.4	mA
I_{OL}	Low-level output current				4			8	mA
f_{clock}	Clock frequency		0		30	0		30	MHz
t_w	Pulse duration	CLK high	20			20			ns
		$\overline{PRE}$ or $\overline{CLR}$ low	25			25			
t_{su}	Set up time-before CLK↓	high or low	20			20			ns
		inactive	20			20			
t_h	Hold time-data after CLK↓		0			0			ns
T_A	Operating free-air temperature		−55		125	0		70	°C

electrical characteristics over recommended operating free-air temperature range (unless otherwise noted)

PARAMETER		TEST CONDITIONS†			SN54LS113A			SN74LS113A			UNIT
					MIN	TYP‡	MAX	MIN	TYP‡	MAX	
V_{IK}		V_{CC} = MIN,	I_I = −18 mA				−1.5			−1.5	V
V_{OH}		V_{CC} = MIN, I_{OH} = −0.4 mA	V_{IH} = 2 V,	V_{IL} = MAX,	2.5	3.4		2.7	3.4		V
V_{OL}		V_{CC} = MIN, I_{OL} = 4 mA	V_{IL} = MAX,	V_{IH} = 2 V,		0.25	0.4		0.25	0.4	V
		V_{CC} = MIN, I_{OL} = 8 mA	V_{IL} = MAX,	V_{IH} = 2 V,					0.35	0.5	
I_I	J or K	V_{CC} = MAX,	V_I = 7 V				0.1			0.1	mA
	$\overline{PRE}$						0.3			0.3	
	$\overline{CLK}$						0.4			0.4	
I_{IH}	J or K	V_{CC} = MAX,	V_I = 2.7 V				20			20	μA
	$\overline{PRE}$						60			60	
	CLK						80			80	
I_{IL}	J or K	V_{CC} = MAX,	V_I = 0.4 V				−0.4			−0.4	mA
	$\overline{PRE}$ or CLK						−0.8			−0.8	
I_{OS}§		V_{CC} = MAX,	see Note 2		−20		−100	−20		−100	mA
I_{CC} (Total)		V_{CC} = MAX,	see Note 3			4	6		4	6	mA

† For conditions shown as MIN or MAX, use the appropriate value specified under recommended operating conditions.
‡ All typical values are at V_{CC} = 5 V, T_A = 25°C.
§ Not more than one output should be shorted at a time, and the duration of the short-circuit should not exceed one second.

NOTES: 2. For certain devices where state commutation can be caused by shorting an output to ground, an equivalent test may be performed with V_O = 2.25 V and 2.125 V for the '54 family and the '74 family, respectively, with the minimum and maximum limits reduced to one half of their stated values.
3. With all outputs open, I_{CC} is measured with the Q and $\overline{Q}$ outputs high in turn. At the time of measurement, the clock input is grounded.

TEXAS INSTRUMENTS
POST OFFICE BOX 655012 • DALLAS, TEXAS 75265

switching characteristics, V_{CC} = 5 V, T_A = 25°C (see Note 4)

PARAMETER	FROM (INPUT)	TO (OUTPUT)	TEST CONDITIONS	MIN	TYP	MAX	UNIT
f_{max}			R_L = 2 kΩ, C_L = 15 pF	30	45		MHz
t_{PLH}	$\overline{PRE}$ or CLK	Q or $\overline{Q}$			15	20	ns
t_{PHL}					15	20	ns

NOTE 4: Load circuits and voltage waveforms are shown in Section 1.

recommended operating conditions

			SN54S113			SN74S113A			UNIT
			MIN	NOM	MAX	MIN	NOM	MAX	
V_{CC}	Supply voltage		4.5	5	5.5	4.75	5	5.25	V
V_{IH}	High-level input voltage		2			2			V
V_{IL}	Low-level input voltage				0.8			0.8	V
I_{OH}	High-level output current				−1			−1	mA
I_{OL}	Low-level output current				20			20	mA
t_w	Pulse duration	CLK high	6			6			ns
		CLK low	6.5			6.5			
		$\overline{PRE}$ low	8			8			
t_{su}	Set up time-before CLK↓	Data high or low	7			7			ns
t_h	Hold time-data after CLK↓		0			0			ns
T_A	Operating free-air temperature		−55		125	0		70	°C

2 TTL Devices

electrical characteristics over recommended operating free-air temperature range (unless otherwise noted)

PARAMETER		TEST CONDITIONS†			SN54S113			SN74S113A			UNIT
					MIN	TYP‡	MAX	MIN	TYP‡	MAX	
V_{IK}		V_{CC} = MIN,	I_I = −18 mA				−1.2			−1.2	V
V_{OH}		V_{CC} = MIN, I_{OH} = −1 mA	V_{IH} = 2 V,	V_{IL} = 0.8 V,	2.5	3.4		2.7	3.4		V
V_{OL}		V_{CC} = MIN, I_{OL} = 20 mA	V_{IH} = 2 V,	V_{IL} = 0.8 V,			0.5			0.5	V
I_I		V_{CC} = MAX,	V_I = 5.5 V				1			1	mA
I_{IH}	J or K	V_{CC} = MAX,	V_I = 2.7 V				50			50	μA
	$\overline{PRE}$ or CLK						100			100	
I_{IL}	J or K	V_{CC} = MAX,	V_I = 0.5 V				−1.6			−1.6	mA
	$\overline{PRE}$§						−7			−7	
	CLK						−4			−4	
I_{OS}¶		V_{CC} = MAX			−40		−100	−40		−100	mA
I_{CC}#		V_{CC} = MAX,	see Note 3			15	25		15	25	mA

† For conditions shown as MIN or MAX, use the appropriate value specified under recommended operating conditions.
‡ All typical values are at V_{CC} = 5 V, T_A = 25°C.
§ Clear is tested with preset high and preset is tested with clear high.
¶ Not more than one output should be shorted at a time, and the duration of the short-circuit should not exceed one second.
# Values are average per flip-flop.
NOTE 3: With all outputs open, I_{CC} is measured with the Q and $\overline{Q}$ outputs high in turn. At the time of measurement, the clock input is grounded

switching characteristics, V_{CC} = 5 V, T_A = 25°C (see Note 4)

PARAMETER	FROM (INPUT)	TO (OUTPUT)	TEST CONDITIONS	MIN	TYP	MAX	UNIT
f_{max}			R_L = 280 Ω, C_L = 15 pF	80	125		MHz
t_{PLH}	$\overline{PRE}$	Q or $\overline{Q}$			4	7	ns
t_{PHL}	$\overline{PRE}$ (CLK high)	$\overline{Q}$ or Q			5	7	ns
	$\overline{PRE}$ (CLK low)				5	7	
t_{PLH}	CLK	Q or $\overline{Q}$			4	7	ns
t_{PHL}					5	7	ns

NOTE 4: Load circuits and voltage waveforms are shown in Section 1.

TEXAS INSTRUMENTS
POST OFFICE BOX 655012 • DALLAS, TEXAS 75265

MARCH 1973—REVISED MARCH

- **Fully Buffered to Offer Maximum Isolation from External Disturbance**
- **Package Options Include Ceramic Carriers and Flat Packages in Addition to Plastic and Ceramic DIPs**
- **Dependable Texas Instruments Quality and Reliability**

description

These devices contain two independent J-K negative-edge-triggered flip-flops. A low level at the preset and clear inputs sets or resets the outputs regardless of the levels of the other inputs. When preset and clear are inactive (high), data at the J and K inputs meeting the setup time requirements are transferred to the outputs on the negative-going edge of the clock pulse. Clock triggering occurs at a voltage level and is not directly related to the rise time of the clock pulse. Following the hold time interval, data at the J and K inputs may be changed without affecting the levels at the outputs. These versatile flip-flops can perform as toggle flip-flops by tying J and K high.

The SN54LS114A and SN54S114 are characterized for operation over the full military temperature range of −55°C to 125°C. The SN74LS114A and SN74S114A are characterized for operation from 0°C to 70°C.

FUNCTION TABLE

INPUTS					OUTPUTS	
$\overline{PRE}$	$\overline{CLR}$	CLK	J	K	Q	$\overline{Q}$
L	H	X	X	X	H	L
H	L	X	X	X	L	H
L	L	X	X	X	H†	H†
H	H	↓	L	L	Q_0	$\overline{Q}_0$
H	H	↓	H	L	H	L
H	H	↓	L	H	L	H
H	H	↓	H	H	TOGGLE	
H	H	H	X	X	Q_0	$\overline{Q}_0$

† The output levels in this configuration are not guaranteed to meet the minimum levels for V_{OH} if the lows at preset and clear are near V_{IL} minimum. Furthermore, this configuration is nonstable; that is, it will not persist when either preset or clear returns to its inactive (high) level

SN54LS114A, SN54S114 . . . J OR W PACKAGE
SN74LS114A, SN74S114A . . . D OR N PACKAGE
(TOP VIEW)

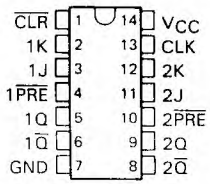

SN54LS114A, SN54S114 . . . FK PACKAGE
(TOP VIEW)

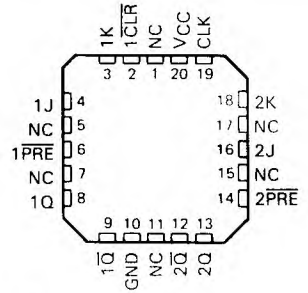

NC—No internal connection

logic symbol‡

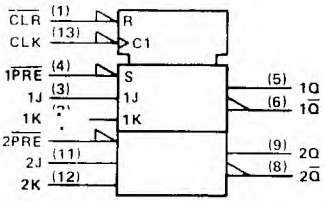

‡This symbol is in accordance with ANSI/IEEE Std 91-1984 and IEC Publication 617-12.

Pin numbers shown are for D, J, N, and W packages.

PRODUCTION DATA documents contain information current as of publication date. Products conform to specifications per the terms of Texas Instruments standard warranty. Production processing does not necessarily include testing of all parameters.

Copyright © 1973, Texas Instruments Incorporated

logic diagram (positive logic)

'LS114A

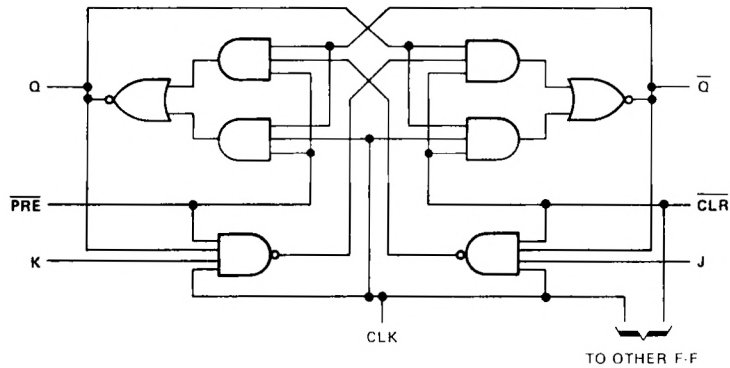

SN54S114, SN74S114A

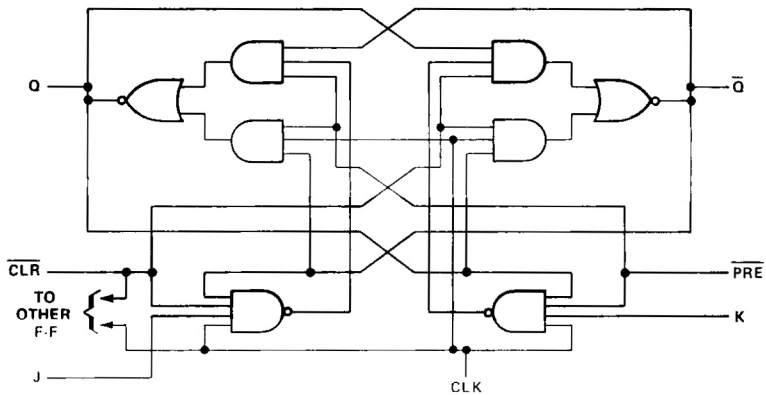

TEXAS INSTRUMENTS
POST OFFICE BOX 655012 • DALLAS, TEXAS 75265

schematics of inputs and outputs

'LS114A

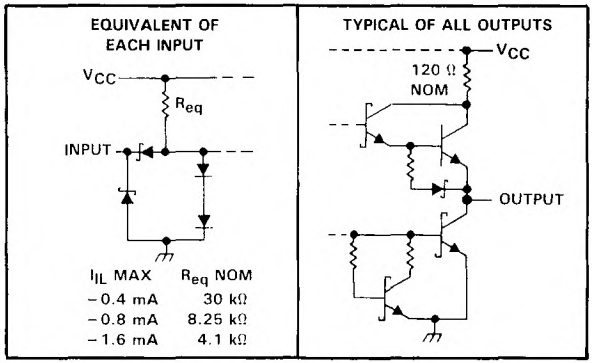

SN54S114, SN74S114A

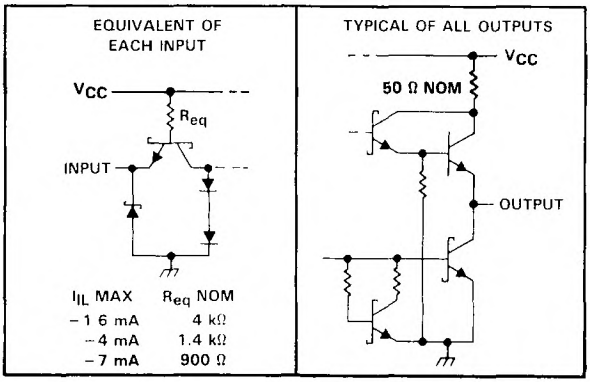

absolute maximum ratings over operating free-air temperature range (unless otherwise noted)

Supply voltage, V_{CC} (see Note 1) . . . . . 7 V
Input voltage: 'LS114A . . . . . 7 V
SN54S114, SN74S114A . . . . . 5.5 V
Operating free-air temperature range: SN54' . . . . . −55°C to 125°C
SN74' . . . . . 0°C to 70°C
Storage temperature range . . . . . −65°C to 150°C

NOTE 1: Voltage values are with respect to network ground terminal.

recommended operating conditions

			SN54LS114A			SN74LS114A			UNIT
			MIN	NOM	MAX	MIN	NOM	MAX	
V_{CC}	Supply voltage		4.5	5	5.5	4.75	5	5.25	V
V_{IH}	High-level input voltage		2			2			V
V_{IL}	Low-level input voltage				0.7			0.8	V
I_{OH}	High-level output current				−0.4			−0.4	mA
I_{OL}	Low-level output current				4			8	mA
f_{clock}	Clock frequency		0		30	0		30	MHz
t_w	Pulse duration	CLK	20			20			ns
		$\overline{PRE}$ or $\overline{CLR}$ low	25			25			
t_{su}	Set up time-before CLK↓	high or low	20			20			ns
		inactive	25			25			
		$\overline{PRE}$ inactive	20			20			
t_h	Hold time-data after CLK↓		0			0			ns
T_A	Operating free-air temperature		−55		125	0		70	°C

electrical characteristics over recommended operating free-air temperature range (unless otherwise noted)

PARAMETER		TEST CONDITIONS†			SN54LS114A			SN74LS114A			UNIT
					MIN	TYP‡	MAX	MIN	TYP‡	MAX	
V_{IK}		V_{CC} = MIN,	I_I = −18 mA				−1.5			−1.5	V
V_{OH}		V_{CC} = MIN, I_{OH} = −0.4 mA	V_{IH} = 2 V,	V_{IL} = MAX,	2.5	3.4		2.7	3.4		V
V_{OL}		V_{CC} = MIN, I_{OL} = 4 mA	V_{IL} MAX,	V_{IH} 2 V,		0 25	0 4		0 25	0 4	V
		V_{CC} = MIN, I_{OL} = 8 mA	V_{IL} = MAX,	V_{IH} = 2 V,					0.35	0.5	
I_I	J or K	V_{CC} = MAX,	V_I = 7 V				0.1			0.1	mA
	$\overline{CLR}$						0.6			0.6	
	$\overline{PRE}$						0.3			0.3	
	CLK						0.8			0.8	
I_{IH}	J or K	V_{CC} = MAX,	V_I = 2.7 V				20			20	μA
	$\overline{CLR}$						120			120	
	$\overline{PRE}$						60			60	
	CLK						160			160	
I_{IL}	J or K	V_{CC} MAX,	V_I 0 4 V				−0.4			−0.4	mA
	$\overline{CLR}$						1 6			- 1.6	
	$\overline{PRE}$						0.8			0.8	
	CLK						−1.6			−1.6	
I_{OS}§		V_{CC} = MAX,	See Note 2		−20		−100	−20		−100	mA
I_{CC} (Total)		V_{CC} = MAX,	See Note 3			4	6		4	6	mA

† For conditions shown as MIN or MAX, use the appropriate value specified under recommended operating conditions.
‡ All typical values are at V_{CC} = 5 V, T_A = 25°C.
§ Not more than one output should be shorted at a time, and the duration of the short-circuit should not exceed one second.
NOTES: 2. For certain devices where state commutation can be caused by shorting an output to ground, an equivalent test may be performed with V_O = 2.25 V and 2.125 V for the '54 family and the '74 family, respectively, with the minimum and maximum limits reduced to one half of their stated values.
3. With all outputs open, I_{CC} is measured with the Q and $\overline{Q}$ outputs high in turn. At the time of measurement, the clock input is grounded

TEXAS INSTRUMENTS
POST OFFICE BOX 655012 • DALLAS, TEXAS 75265

switching characteristics, V_{CC} = 5 V, T_A = 25°C (see Note 4)

PARAMETER	FROM (INPUT)	TO (OUTPUT)	TEST CONDITIONS	MIN	TYP	MAX	UNIT
f_{max}			R_L = 2 kΩ, C_L = 15 pF	30	45		MHz
t_{PLH}	$\overline{CLR}$, $\overline{PRE}$ or CLK	Q or $\overline{Q}$			15	20	ns
t_{PHL}					15	20	ns

NOTE 4: Load circuit and voltage waveforms are shown in Section 1.

recommended operating conditions

			SN54S114			SN74S114A			UNIT
			MIN	NOM	MAX	MIN	NOM	MAX	
V_{CC}	Supply voltage		4.5	5	5.5	4.75	5	5.25	V
V_{IH}	High-level input voltage		2			2			V
V_{IL}	Low-level input voltage				0.8			0.8	V
I_{OH}	High-level output current				−1			−1	mA
I_{OL}	Low-level output current				20			20	mA
t_w	Pulse duration	CLK	6			6			ns
		ow	6.5			6.5			
		r $\overline{CLR}$ low	8			8			
t_{su}	Setup time	Data high or low	7			7			ns
t_h	Hold time-data after CLK↓		0			0			ns
T_A	Operating free-air temperature		−55		125	0		70	°C

electrical characteristics over recommended operating free-air temperature range (unless otherwise noted)

PARAMETER		TEST CONDITIONS†			SN54S114			SN74S114A			UNIT
					MIN	TYP‡	MAX	MIN	TYP‡	MAX	
V_{IK}		V_{CC} = MIN,	I_I = −18 mA				−1.2			−1.2	V
V_{OH}		V_{CC} = MIN, I_{OH} = −1 mA	V_{IH} = 2 V,	V_{IL} = 0.8 V,	2.5	3.4		2.7	3.4		V
V_{OL}		V_{CC} = MIN, I_{OL} = 20 mA	V_{IH} = 2 V,	V_{IL} = 0.8 V,			0.5			0.5	V
I_I		V_{CC} = MAX,	V_I = 5.5 V				1			1	mA
I_{IH}	J or K	V_{CC} = MAX,	V_I = 2.7 V				50			50	μA
	$\overline{CLR}$						200			200	
	$\overline{PRE}$						100			100	
	CLK						200			200	
I_{IL}	J or K	V_{CC} = MAX,	V_I = 0.5 V				−1.6			−1.6	mA
	$\overline{CLR}$						−1.4			−1.4	
	$\overline{PRE}$						−7			−7	
	CLK						−8			−8	
I_{OS}§		V_{CC} = MAX			−40		−100	−40		−100	mA
I_{CC}#		V_{CC} = MAX,	See Note 3			15	25		15	25	mA

† For conditions shown as MIN or MAX, use the appropriate value specified under recommended operating conditions.
‡ All typical values are at V_{CC} = 5 V, T_A = 25°C.
§ Not more than one output should be shorted at a time, and the duration of the short-circuit should not exceed one second.
# Values are average per flip-flop.
NOTE 3: With all outputs open, I_{CC} is measured with the Q and $\overline{Q}$ outputs high in turn. At the time of measurement, the clock input is grounded

TEXAS INSTRUMENTS
POST OFFICE BOX 655012 • DALLAS, TEXAS 75265

switching characteristics, V_{CC} = 5 V, T_A = 25°C (see Note 4)

PARAMETER	FROM (INPUT)	TO (OUTPUT)	TEST CONDITIONS	MIN	TYP	MAX	UNIT
f_{max}			R_L = 280 Ω, C_L = 15 pF	80	125		MHz
t_{PLH}	$\overline{PRE}$ or $\overline{CLR}$	Q or $\overline{Q}$			4	7	ns
t_{PHL}	$\overline{PRE}$ or $\overline{CLR}$ (CLK high)	$\overline{Q}$ or Q			5	7	ns
	$\overline{PRE}$ or $\overline{CLR}$ (CLK low)				5	7	
t_{PLH}	CLK	Q or $\overline{Q}$			4	7	ns
t_{PHL}					5	7	ns

NOTE 4: Load circuit and voltage waveforms are shown in Section 1

DECEMBER 1972 – REVISED MARCH 1988

- Two Independent 4-Bit Latches in a Single Package
- Separate Clear Inputs Provide One-Step Clearing Operation
- Dual Gated Enable Inputs Simplify Cascading Register Implementations
- Compatible for Use with TTL Circuits
- Input Clamping Diodes Simplify System Design

SN54116 . . . J OR W PACKAGE
SN74116 . . . N PACKAGE
(TOP VIEW)

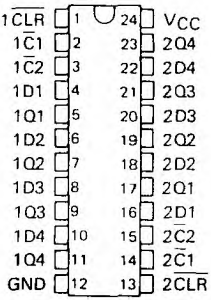

description

These monolithic TTL circuits utlize D-type bistables to implement two independent four-bit latches in a single package. Each four-bit latch has an independent asynchronous clear input and a gated two-input enable circuit. When both enable inputs are low, the output levels will follow the data input levels. When either or both of the enable inputs are taken high, the outputs remain at the last levels setup at the inputs prior to the low-to-high-level transition at the enable input(s). After this, the data inputs are locked out.

The clear input is overriding and when taken low will reset all four outputs low regardless of the levels of the enable inputs.

The SN54116 is characterized for operation over the full military temperature range of −55°C to 125°C; the SN74116 is characterized for operation from 0°C to 70°C.

FUNCTION TABLE
(EACH LATCH)

INPUTS				OUTPUT
$\overline{CLEAR}$	ENABLE $\overline{C1}$	ENABLE $\overline{C2}$	DATA	Q
H	L	L	L	L
H	L	L	H	H
H	X	H	X	Q_0
H	H	X	X	Q_0
L	X	X	X	L

H = high level, L = low level, X = irrelevant
Q_0 = the level of Q before these input conditions were established.

logic symbol†

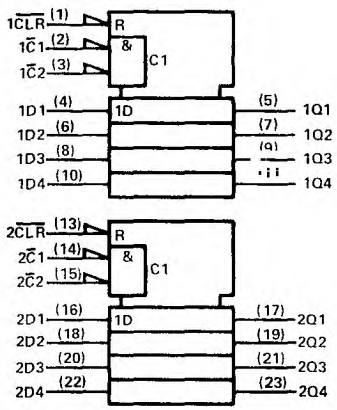

†This symbol is in accordance with ANSI/IEEE Std. 91-1984 and IEC Publication 617-12.

PRODUCTION DATA documents contain information current as of publication date. Products conform to specifications per the terms of Texas Instruments standard warranty. Production processing does not necessarily include testing of all parameters.

logic diagram (positive logic)

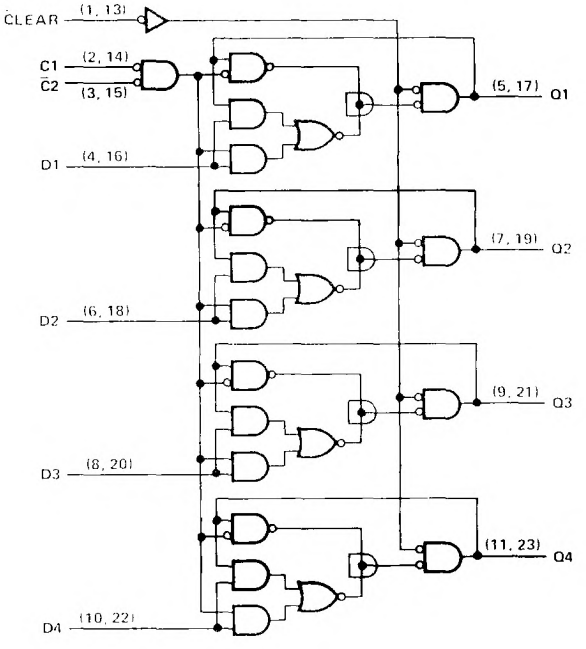

schematics of inputs and outputs

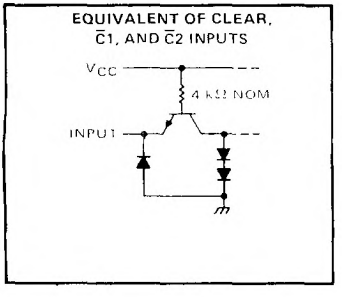

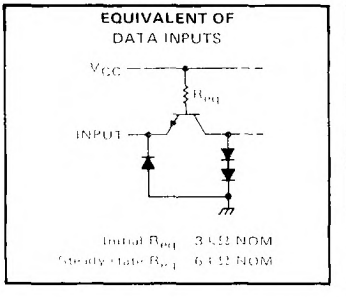

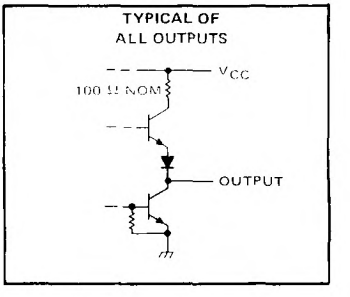

absolute maximum ratings over operating free-air temperature range (unless otherwise noted)

Supply voltage, V_{CC} (see Note 1)		7 V
Input voltage		5.5 V
Operating free-air temperature range:	SN54116 Circuits	−55°C to 125°C
	SN74116 Circuits	0°C to 70°C
Storage temperature range		−65°C to 150°C

NOTE 1. Voltage values are with respect to network ground terminal

TEXAS INSTRUMENTS
POST OFFICE BOX 655012 • DALLAS, TEXAS 75265

recommended operating conditions

		SN54116			SN74116			UNIT
		MIN	NOM	MAX	MIN	NOM	MAX	
Supply voltage, V_{CC}		4.5	5	5.5	4.75	5	5.25	V
High-level output current, I_{OH}				−800			−800	μA
Low-level output current, I_{OL}				16			16	mA
Input pulse width, t_w	$\overline{C1}$, $\overline{C2}$	18			18			ns
	$\overline{CLR}$	18			18			
Data setup time, t_{su}	High logic level	8			8			ns
	Low logic level	14			14			
Clear inactive-state setup time, t_{su}		8			8			ns
Data release time, high-level data, $t_{release}$				2			2	ns
Data hold time, low-level data, t_h		8			8			
Operating free-air temperature, T_A		−55		125	0		70	°C

electrical characteristics over recommended operating free-air temperature range (unless otherwise noted)

PARAMETER			TEST CONDITIONS†		MIN	TYP‡	MAX	UNIT
V_{IH}	High-level input voltage				2			V
V_{IL}	Low-level input voltage						0.8	V
V_{IK}	Input clamp voltage		V_{CC} = MIN, I_I = −12 mA				−1.5	V
V_{OH}	High-level output voltage		V_{CC} = MIN, V_{IH} = 2 V, V_{IL} = 0.8 V, I_{OH} = −800 μA		2.4	3.4		V
V_{OL}	Low-level output voltage		V_{CC} = MIN, V_{IH} = 2 V, V_{IL} = 0.8 V, I_{OL} = 16 mA			0.2	0.4	V
I_I	Input current at maximum input voltage		V_{CC} = MAX, V_I = 5.5 V				1	mA
I_{IH}	High-level input current	$\overline{C1}$, $\overline{C2}$, or clear	V_{CC} = MAX, V_I = 2.4 V				40	μA
		Any D					60	
I_{IL}	Low-level input current	$\overline{C1}$, $\overline{C2}$, or clear	V_{CC} = MAX, V_I = 0.4 V				−1.6	mA
		Any D, initial peak					−2.4	
		Any D, steady-state					−1.6	
I_{OS}	Short-circuit output current§		V_{CC} = MAX	SN54116	−20		−57	mA
				SN74116	−18		−57	
I_{CC}	Supply current		V_{CC} = MAX, See Note 2	Condition A		60	100	mA
				Condition B		40	70	

†For conditions shown as MIN or MAX, use the appropriate value specified under recommended operating conditions for the applicable device type.
‡All typical values are at V_{CC} = 5 V, T_A = 25°C.
§Not more than one output should be shorted at a time.
NOTE 2: With outputs open, I_{CC} is measured for the following conditions:
A. All inputs grounded.
B. All $\overline{C}$ inputs are grounded and all other inputs are at 4.5 V.

switching characteristics, V_{CC} = 5 V, T_A = 25°C

PARAMETER	FROM (INPUT)	TO (OUTPUT)	TEST CONDITIONS	MIN	TYP	MAX	UNIT
t_{PLH}	$\overline{C1}$ or $\overline{C2}$	Any Q	C_L = 15 pF, R_L = 400 Ω, See Figure 1		19	30	ns
t_{PHL}					15	22	
t_{PLH}	Data	Q			10	15	ns
t_{PHL}					12	18	
t_{PHL}	$\overline{CLR}$	Any Q			15	22	ns

PARAMETER MEASUREMENT INFORMATION

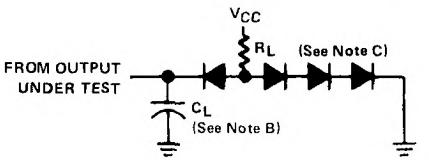

LOAD CIRCUIT

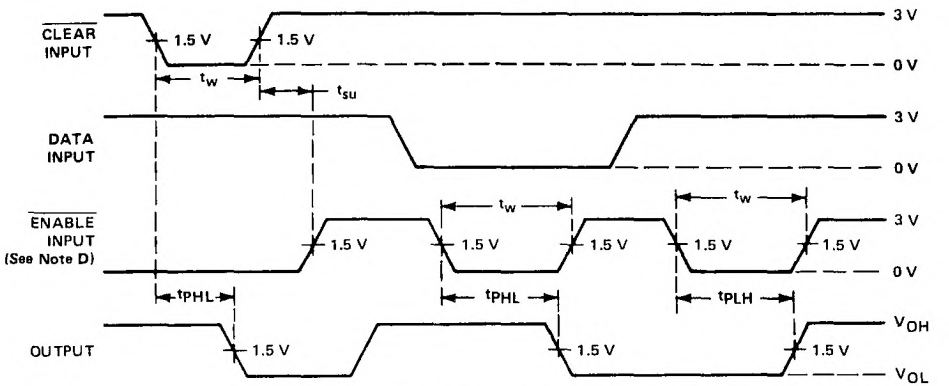

SWITCHING TIMES FROM CLEAR AND ENABLE INPUTS

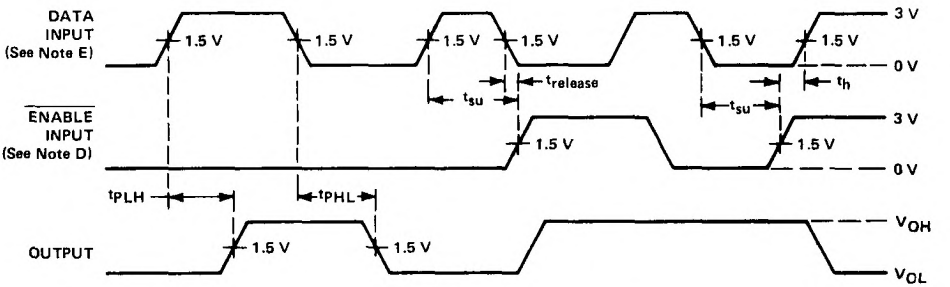

SWITCHING TIMES FROM DATA INPUTS

NOTES: A. Input pulses are supplied by generators having the following characteristics: $t_r \leq 10$ ns, $t_f \leq 10$ ns, PRR = 1 MHz, duty cycle $\leq$ 50%, $Z_{out} \approx 50\Omega$.
B. C_L includes probe and jig capacitance.
C. All diodes are 1N3064 or equivalent.
D. The other enable input is low.
E. Clear input is high.

FIGURE 1

TEXAS INSTRUMENTS
POST OFFICE BOX 655012 • DALLAS, TEXAS 75265

SEPTEMBER 1971 – REVISED MARCH 1988

- Generates Either a Single Pulse or Train of Pulses Synchronized with Control Functions
- Ideal for Implementing Sync-Control Circuits Similar to those Used in Oscilloscopes
- Latched Operation Ensures that Output Pulses Are Not Clipped
- High-Fan-Out Complementary Outputs Drive System Clock Lines Directly
- Internal Input Pull-Up Resistors Eliminate Need for External Components
- Diode-Clamped Inputs Simplify System Design
- Typical Propagation Delays:

  9 Nanoseconds through One Level
  16 Nanoseconds through Two Levels

SN54120 . . . J PACKAGE
SN74120 . . . N PACKAGE
(TOP VIEW)

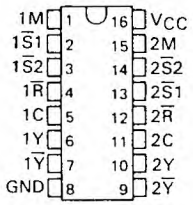

description

These monolithic pulse synchronizers are designed to synchronize an asynchronous or manual signal with a system clock. Reliable response is ensured as the input signals are latched up; therefore duration of logic input is not critical and the adverse effects of contact-bounce of a manual input are eliminated. The ability to pass output pulses is started and stopped by the levels or pulses applied to the latch inputs $\overline{S}1$, $\overline{S}2$, or $\overline{R}$ in accordance with the function table. High-speed circuitry is utilized throughout the clock paths to minimize skew with respect to the system clock.

After initiation, the mode control (M) input determines whether a series of pulses or only one pulse is passed. In the absence of a stop command, the clock driver will continue to pass clock pulses as long as the mode control input is low (see Figures 2 through 4). After the mode control input is taken high, only a single clock pulse will be passed (see Figure 5).

When the mode control is set to pass a series of pulses, the last pulse out is determined by two general rules:

FUNCTION TABLE

INPUTS			FUNCTION
$\overline{R}$	$\overline{S}1$	$\overline{S}2$	
X	L	X	Pass Output Pulses
X	X	L	Pass Output Pulses
L	H	H	Inhibit Output Pulses
H	↓	H	Start Output Pulses
H	H	↓	Start Output Pulses
↓	H	H	Stop Output Pulses
H	H	H	Continue†

H = high level (steady state)
L = low level (steady state)
↓ = transition from H to L
X = irrelevant
†Operation initiated by last ↓ transition continues.

a. When pulses are terminated by the $\overline{S}$ or $\overline{R}$ inputs, conditions meeting the setup times (specified under recommended operating conditions) will dominate.

b. Low-to-high-level transitions at the mode control input should be avoided during the 20-nanosecond period immediately following the negative transition of the input clock pulse as transitions during this time period may or may not allow the next pulse to pass (see Figures 4 and 5). When pulses are terminated by the mode control input, a positive transition at the mode control input meeting the high-level setup time, t_{su} (H), (specified under recommended operating conditions) will pass that positive clock pulse then inhibit remaining clock pulses. The clock input (C) is latch-controlled ensuring that once initiated the output pulse will not be terminated until the full pulse has been passed.

PRODUCTION DATA documents contain information current as of publication date. Products conform to specifications per the terms of Texas Instruments standard warranty. Production processing does not necessarily include testing of all parameters.

description (continued)

This clock driver circuit is entirely compatible for use with either digital logic circuits or mechanical switches for input controls since all inputs, except the clock, have internal pull-up resistors. This eliminates the requirement to supply an external resistor to prevent the input from floating when the control switch is open. The internal resistor also means that these inputs may be left disconnected if unused.

Typical propagation delay time is 9 nanoseconds to the $\overline{Y}$ output and 16 nanoseconds to the Y output from the clock input. The outputs will drive 60 Series 54/74 loads at a high logic level and 30 loads at a low logic level. Typical power dissipation is 127 milliwatts per driver. The SN54120 is characterized for operation from −55°C to 125°C; the SN74120 is characterized for operation from 0°C to 70°C.

logic diagram (each driver) (positive logic)

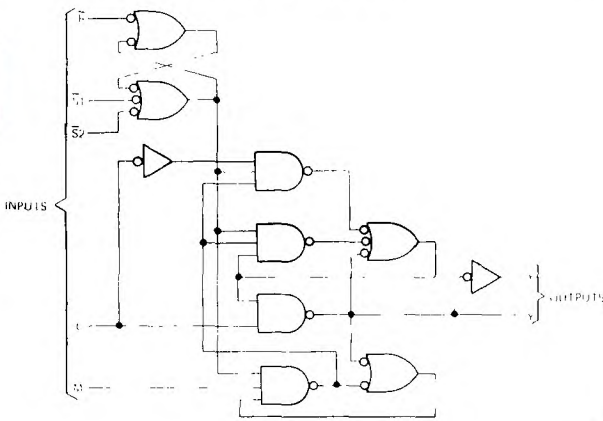

logic symbol†

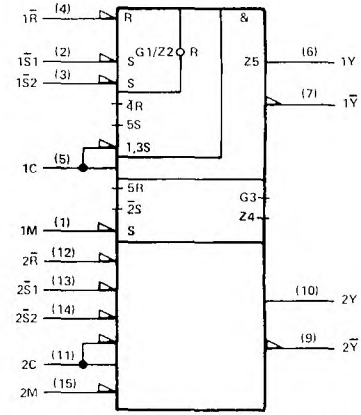

†This symbol is in accordance with ANSI/IEEE Std 91-1984 and IEC Publication 617-12.

schematics of inputs and outputs

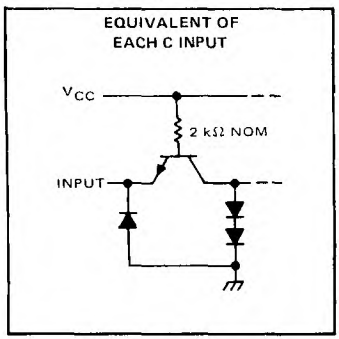

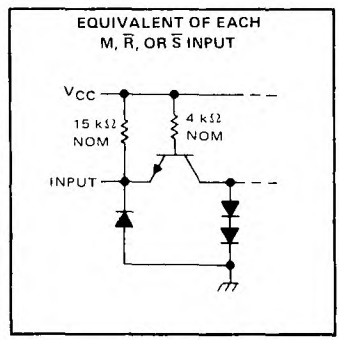

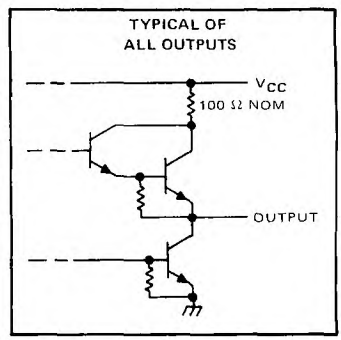

TEXAS INSTRUMENTS
POST OFFICE BOX 655012 • DALLAS, TEXAS 75265

absolute maximum ratings over operating free-air temperature range (unless otherwise noted)

Supply voltage, V_{CC} (see Note 1) . . . . . 7 V
Input voltage . . . . . 5.5 V
Interemitter voltage (see Note 2) . . . . . 5.5 V
Operating free-air temperature range: SN54120 Circuits . . . . . −55°C to 125°C
SN74120 Circuits . . . . . 0°C to 70°C
Storage temperature range . . . . . −65°C to 150°C

NOTES: 1. Voltage values, except interemitter voltage, are with respect to network ground terminal.
2. This is the voltage between two emitters of a multiple-emitter transistor. For this circuit, this rating applies between the S1 and S2 inputs.

recommended operating conditions

			SN54120			SN74120			UNIT
			MIN	NOM	MAX	MIN	NOM	MAX	
Supply voltage, V_{CC}			4.5	5	5.5	4.75	5	5.25	V
High-level output current, I_{OH}					−2.4			−2.4	mA
Low-level output current, I_{OL}					48			48	mA
Setup time (see Figures 2 thru 5)	Any input except mode control, t_{su}(H or L)		12			12			ns
	Mode control	t_{su}(H)	0			0			
		t_{su}(L)	12			12			
Hold time (see Figures 3 and 5)	Any input except mode control, t_h(H or L)		3			3			ns
	Mode control, t_h(H or L)		20			20			
Operating free-air temperature, T_A			−55		125	0		70	°C

electrical characteristics over recommended operating free-air temperature range (unless otherwise noted)

PARAMETER			TEST CONDITIONS†	MIN	TYP‡	MAX	UNIT
V_{IH}	High-level input voltage			2			V
V_{IL}	Low-level input voltage					0.8	V
V_{IK}	Input clamp voltage		V_{CC} = MIN, I_I = −12 mA			−1.5	V
V_{OH}	High-level output voltage		V_{CC} = MIN, V_{IH} = 2 V, V_{IL} = 0.8 V, I_{OH} = −2.4 mA	2.4	3.4		V
V_{OL}	Low-level output voltage		V_{CC} = MIN, V_{IH} = 2 V, V_{IL} = 0.8 V, I_{OL} = 48 mA		0.2	0.4	V
I_I	Input current at maximum input voltage		V_{CC} = MAX, V_I = 5.5 V			1	mA
I_{IH}	High-level input current	Clock input	V_{CC} = MAX, V_I = 2.4 V			80	μA
		Other inputs		−0.12	−0.2	−0.36	mA
I_{IL}	Low-level input current	Clock input	V_{CC} = MAX, V_I = 0.4 V			−3.2	mA
		Other inputs				−2.1	
I_{OS}	Short-circuit output current§		V_{CC} = MAX	−35		−90	mA
I_{CC}	Supply current		V_{CC} = MAX, See Note 3		51	90	mA

† For conditions shown as MIN or MAX, use the appropriate value specified under recommended operating conditions.
‡ All typical values are at V_{CC} = 5 V, T_A = 25°C.
§ Not more than one output should be shorted at a time.
NOTE 3: I_{CC} is measured with ground applied to all inputs except R which is at 4.5 V and all outputs open.

switching characteristics, V_{CC} = 5 V, T_A = 25°C

PARAMETER¶	FROM (INPUT)	TO (OUTPUT)	TEST CONDITIONS	MIN	TYP	MAX	UNIT
t_{PLH}	C	Y	C_L = 45 pF, R_L = 133 Ω, See Figure 1		14	22	ns
t_{PHL}					17	25	
t_{PLH}	C	$\overline{Y}$			10	16	ns
t_{PHL}					8	13	

¶ t_{PLH} = Propagation delay time, low-to-high-level output
t_{PHL} = Propagation delay time, high-to-low-level output

PARAMETER MEASUREMENT INFORMATION

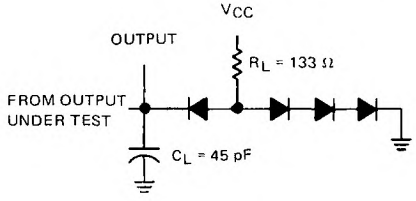

NOTES: A. The clock input pulse in figures 2 through 5 is supplied by a generator having the following characteristics: $t_{w(clock)} \geq 15$ ns, PRR ≤ 1 MHz, and $Z_{out} \approx 50\ \Omega$.
B. C_L includes probe and jig capacitance.
C. All diodes are 1N3064 or equivalent.

FIGURE 1–LOAD CIRCUIT FOR SWITCHING TESTS

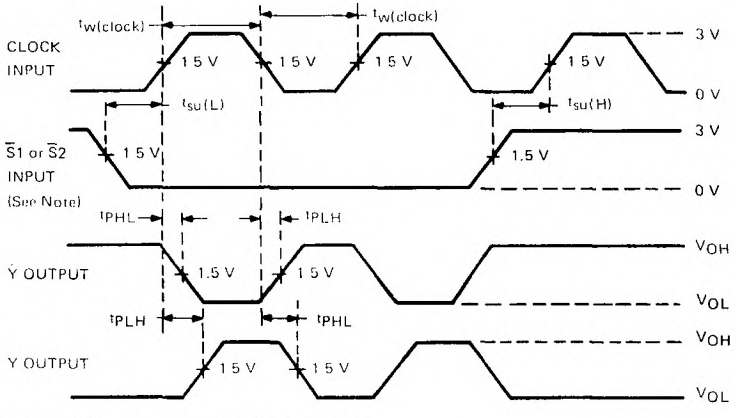

NOTE: Mode control and $\overline{R}$ inputs are low and unused $\overline{S}$ input is high.

FIGURE 2–INITIATING AND TERMINATING PULSE TRAIN FROM S INPUTS

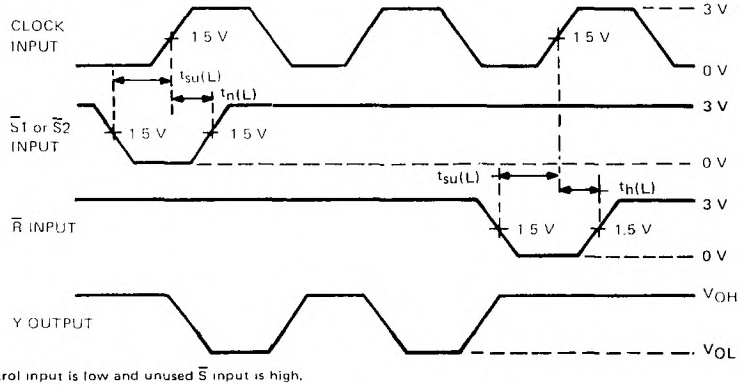

NOTE: Mode control input is low and unused $\overline{S}$ input is high.

FIGURE 3–INITIATING PULSE TRAIN FROM S AND TERMINATING WITH R INPUTS

TEXAS INSTRUMENTS
POST OFFICE BOX 655012 • DALLAS, TEXAS 75265

PARAMETER MEASUREMENT INFORMATION

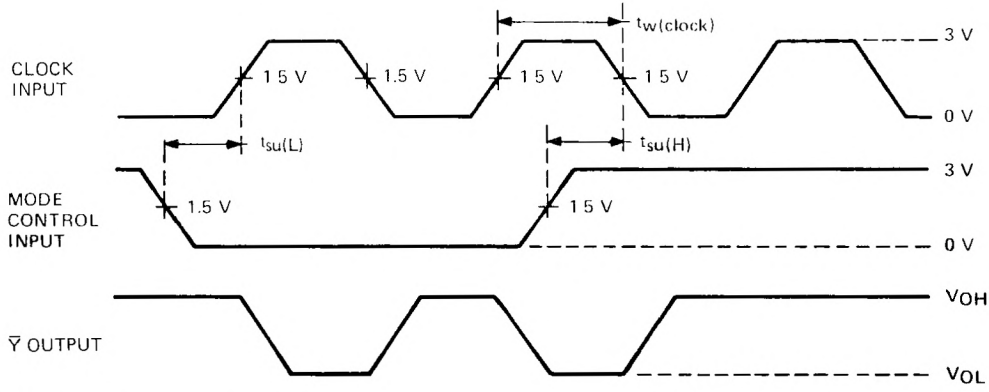

NOTE: At least one of the $\overline{S}$ inputs is low.

FIGURE 4—INITIATING AND TERMINATING PULSE TRAIN WITH MODE CONTROL INPUT

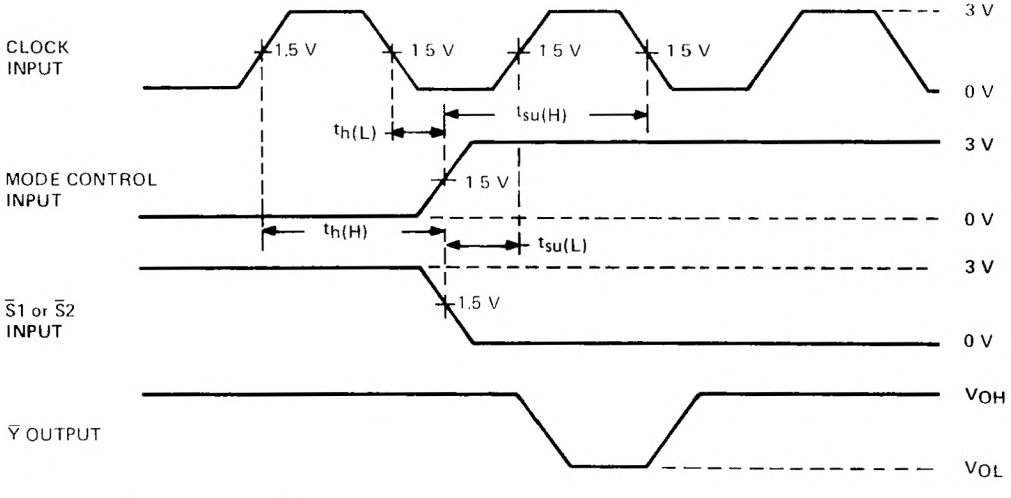

NOTE: Input $\overline{R}$ is low and the unused $\overline{S}$ input is high.

FIGURE 5—ENABLING SINGLE PULSE

- Programmable Output Pulse Width
  With R_{int} . . . 35 ns Typ
  With R_{ext}/C_{ext} . . . 40 ns to 28 Seconds
- Internal Compensation for Virtual Temperature Independence
- Jitter-Free Operation up to 90% Duty Cycle
- Inhibit Capability

SN54121 . . . J OR W PACKAGE
SN74121 . . . N PACKAGE
(TOP VIEW)

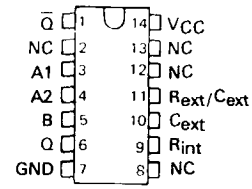

NC - No internal connection.

FUNCTION TABLE

INPUTS			OUTPUTS	
A1	A2	B	Q	Q̄
L	X	H	L	H
X	L	H	L†	H†
X	X	L	L†	H†
H	H	X	L†	H†
H	↓	H	⎍	⎎
↓	H	H	⎍	⎎
↓	↓	H	⎍	⎎
L	X	↑	⎍	⎎
X	L	↑	⎍	⎎

For explanation of function table symbols, see page

† These lines of the function table assume that the indicated steady-state conditions at the A and B inputs have been setup long enough to complete any pulse started before the setup.

logic symbol‡

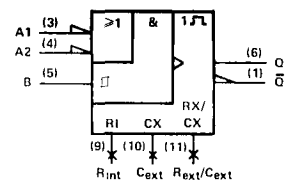

‡This symbol is in accordance with ANSI/IEEE Std 91-1984 and IEC Publication 617-12.

description

These multivibrators feature dual negative-transition-triggered inputs and a single positive-transition-triggered input which can be used as an inhibit input. Complementary output pulses are provided.

Pulse triggering occurs at a particular voltage level and is not directly related to the transition time of the input pulse. Schmitt-trigger input circuitry (TTL hysteresis) for the B input allows jitter-free triggering from inputs with transition rates as slow as 1 volt/second, providing the circuit with an excellent noise immunity of typically 1.2 volts. A high immunity to V_{CC} noise of typically 1.5 volts is also provided by internal latching circuitry.

Once fired, the outputs are independent of further transitions of the inputs and are a function only of the timing components. Input pulses may be of any duration relative to the output pulse. Output pulse length may be varied from 40 nanoseconds to 28 seconds by choosing appropriate timing components. With no external timing components (i.e., R_{int} connected to V_{CC}, C_{ext} and R_{ext}/C_{ext} open), an output pulse of typically 30 or 35 nanoseconds is achieved which may be used as a d-c triggered reset signal. Output rise and fall times are TTL compatible and independent of pulse length.

Pulse width stability is achieved through internal compensation and is virtually independent of V_{CC} and temperature. In most applications, pulse stability will only be limited by the accuracy of external timing components.

Jitter-free operation is maintained over the full temperature and V_{CC} ranges for more than six decades of timing capacitance (10 pF to 10 μF) and more than one decade of timing resistance (2 kΩ to 30 kΩ for the SN54121 and 2 kΩ to 40 kΩ for the SN74121). Throughout these ranges, pulse width is defined by the relationship $t_{w(out)} = C_{ext}R_T\ln 2 \approx 0.7\, C_{ext}R_T$. In circuits where pulse cutoff is not critical, timing capacitance up to 1000 μF and timing resistance as low as 1.4 kΩ may be used. Also, the range of jitter-free output pulse widths is extended if V_{CC} is held to 5 volts and free-air temperature is 25°C. Duty cycles as high as 90% are achieved when using maximum recommended R_T. Higher duty cycles are available if a certain amount of pulse-width jitter is allowed.

PRODUCTION DATA documents contain information current as of publication date. Products conform to specifications per the terms of Texas Instruments standard warranty. Production processing does not necessarily include testing of all parameters.

logic diagram (positive logic)

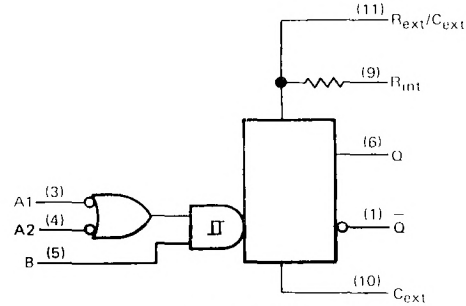

R_{int} = 2 kΩ NOM

Pin numbers shown on logic notation are for J or N packages.

NOTES: 1. An external capacitor may be connected between C_{ext} (positive) and R_{ext}/C_{ext}.
2. To use the internal timing resistor, connect R_{int} to V_{CC}. For improved pulse width accuracy and repeatability, connect an external resistor between R_{ext}/C_{ext} and V_{CC} with R_{int} open-circuited.

schematics of inputs and outputs

EQUIVALENT OF EACH INPUT

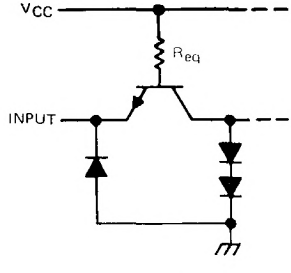

INPUT	R_{eq} NOM
A1	4 kΩ
A2	4 kΩ
B	2 kΩ

TYPICAL OF BOTH OUTPUTS

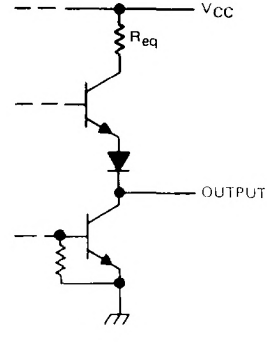

R_{eq} = 130 Ω NOM

TEXAS INSTRUMENTS
POST OFFICE BOX 655012 • DALLAS, TEXAS 75265

absolute maximum ratings over operating free-air temperature range (unless otherwise noted)

Supply voltage, V_{CC} (see Note 3) . . . . . 7 V
Input voltage . . . . . 5.5 V
Operating free-air temperature range: SN54121 . . . . . −55°C to 125°C
SN74121 . . . . . 0°C to 70°C
Storage temperature range . . . . . −65°C to 150°C

NOTE 3: Voltage values are with respect to network ground terminal.

recommended operating conditions

				MIN	NOM	MAX	UNIT
V_{CC}	Supply voltage		54 Family	4.5	5	5.5	V
			74 Family	4.75	5	5.25	
I_{OH}	High-level output current					−0.4	mA
I_{OL}	Low-level output current					16	mA
dv/dt	Rate of rise or fall of input pulse	Schmitt input, B		1			V/s
		Logic inputs, A1, A2		1			V/μs
$t_{w(in)}$	Input pulse width			50			ns
R_{ext}	External timing capacitance		54 Family	1.4		30	kΩ
			74 Family	1.4		40	
C_{ext}	External timing capacitance			0		1000	μF
	Duty cycle	R_T = 2 kΩ				67	%
		R_T = MAX R_{ext}				90	
T_A	Operating free-air temperature		54 Family	55		125	°C
			74 Family	0		70	

electrical characteristics over recommended operating free-air temperature range (unless otherwise noted)

PARAMETER		TEST CONDITIONS†		MIN	TYP‡	MAX	UNIT
V_{IH}	High-level input voltage at B input	V_{CC} = MIN		2			V
V_{IL}	Low-level input voltage at A input	V_{CC} = MIN				0.8	V
V_{T+}	Positive-going threshold voltage at B input	V_{CC} = "			1.55	2	V
V_{T-}	Negative-going threshold voltage at B input	V_{CC} = "		0.8	1.35		V
V_{IK}	Input clamp voltage	V_{CC} = MIN,	I_I = −12 mA			−1.5	V
I_{OH}	High-level output voltage	V_{CC} = MIN,	I_{OH} = MAX	2.4	3.4		V
V_{OL}	Low-level output voltage	V_{CC} = MIN,	I_{OL} = MAX		0.2	0.4	V
I_I	Input current at maximum input voltage	V_{CC} = MAX,	V_I = 5.5 V			1	mA
I_{IH}	High-level input current	V_{CC} = MAX, V_I = 2.4 V	A1 or A2			40	μA
			B			80	
I_{IL}	Low-level input current	V_{CC} = MAX, V_I = 0.4 V	A1 or A2			−1.6	mA
			B			−3.2	
I_{OS}	Short-circuit output current§	V_{CC} = MAX	54 Family	−20		−55	mA
			74 Family	−18		−55	
I_{CC}	Supply current	V_{CC} = MAX	Quiescent		13	25	mA
			Triggered		23	40	

†For conditions shown as MIN or MAX, use the appropriate value specified under recommended operating conditions.
‡All typical values are at V_{CC} = 5 V, T_A = 25°C.
§Not more than one output should be shorted at a time.

switching characteristics, V_{CC} = 5 V, T_A = 25°C

PARAMETER		TEST CONDITIONS		MIN	TYP	MAX	UNIT
t_{PLH}	Propagation delay time, low-to-high-level Q output from either A input	C_L = 15 pF, R_L = 400 Ω, See Note 4	C_{ext} = 80 pF, R_{int} to V_{CC}		45	70	ns
t_{PLH}	Propagation delay time, low-to-high-level Q output from B input				35	55	ns
t_{PHL}	Propagation delay time, high-to-low level $\overline{Q}$ output from either A input				50	80	ns
t_{PHL}	Propagation delay time, high-to-low level $\overline{Q}$ output from B input				40	65	ns
$t_{w(out)}$	Pulse width obtained using internal timing resistor		C_{ext} = 80 pF, R_{int} to V_{CC}	70	110	150	ns
$t_{w(out)}$	Pulse width obtained with zero timing capacitance		C_{ext} = 0, R_{int} to V_{CC}		30	50	ns
$t_{w(out)}$	Pulse width obtained using external timing resistor		C_{ext} = 100 pF, R_T = 10 kΩ	600	700	800	ns
			C_{ext} = 1 μF, R_T = 10 kΩ	6	7	8	ms

NOTE 4: Load circuits and voltage waveforms are shown in Section 1.

TEXAS INSTRUMENTS
POST OFFICE BOX 655012 • DALLAS, TEXAS 75265

TYPICAL CHARACTERISTICS†

DISTRIBUTION OF UNITS
for
OUTPUT PULSE WIDTH

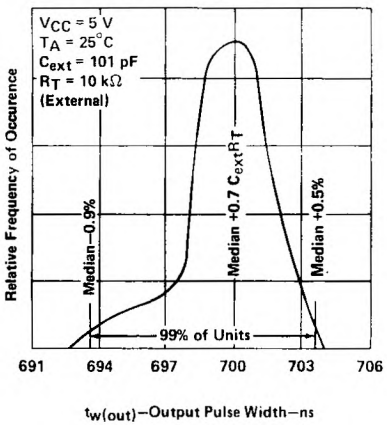

FIGURE 1

VARIATION IN INTERNAL TIMING RESISTOR VALUE
vs
FREE-AIR TEMPERATURE

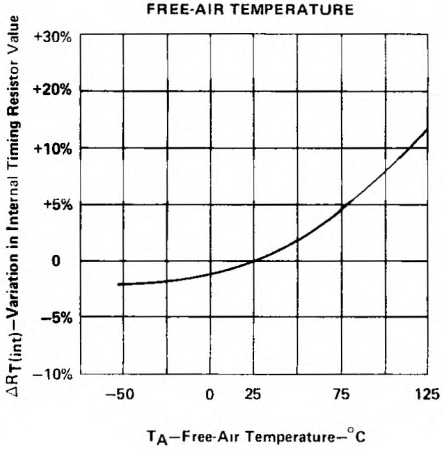

FIGURE 2

VARIATION IN OUTPUT PULSE WIDTH
vs
SUPPLY VOLTAGE

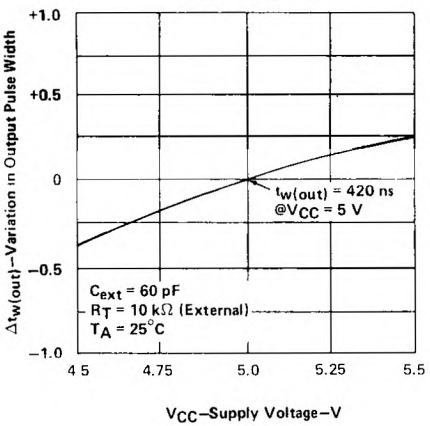

FIGURE 3

SCHMITT TRIGGER THRESHOLD VOLTAGE
vs
FREE-AIR TEMPERATURE

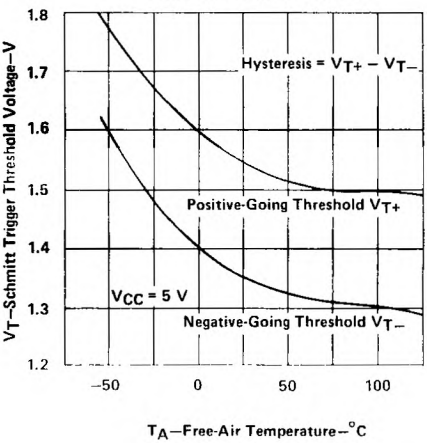

FIGURE 4

†Data for temperatures below 0°C and above 70°C are applicable for SN54121

TYPICAL CHARACTERISTICS† (continued)

VARIATION IN OUTPUT PULSE WIDTH
vs
FREE-AIR TEMPERATURE

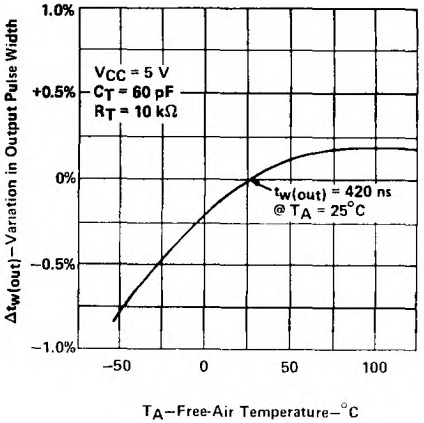

FIGURE 5

OUTPUT PULSE WIDTH
vs
TIMING RESISTOR VALUE

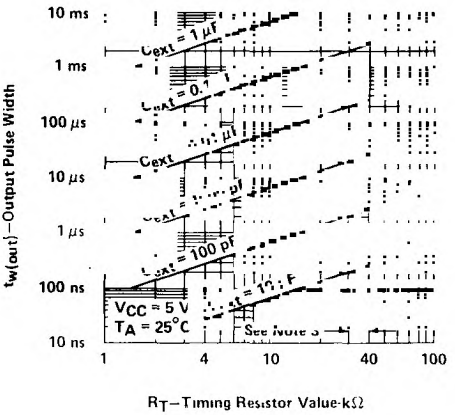

FIGURE 6

OUTPUT PULSE WIDTH
vs
EXTERNAL CAPACITANCE

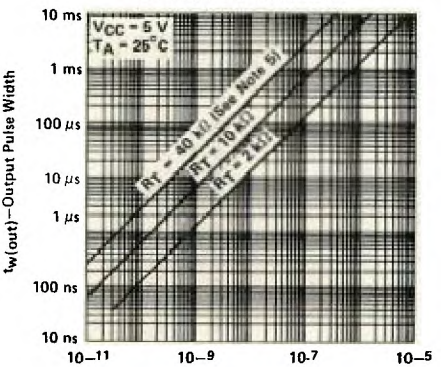

FIGURE 7

NOTE 5: These values of resistance exceed the maximum recommended use over the full temperature range of the SN54121.
†Data for temperatures below 0°C and above 70°C are applicable for SN54121.

TEXAS INSTRUMENTS
POST OFFICE BOX 655012 • DALLAS, TEXAS 75265

- D-C Triggered from Active-High or Active-Low Gated Logic Inputs
- Retriggerable for Very Long Output Pulses, Up to 100% Duty Cycle
- Overriding Clear Terminates Output Pulse
- '122 and 'LS122 Have Internal Timing Resistors

description

These d-c triggered multivibrators feature output pulse-duration control by three methods. The basic pulse time is programmed by selection of external resistance and capacitance values (see typical application data). The '122 and 'LS122 have internal timing resistors that allow the circuits to be used with only an external capacitor, if so desired. Once triggered, the basic pulse duration may be extended by retriggering the gated low-level-active (A) or high-level-active (B) inputs, or be reduced by use of the overriding clear. Figure 1 illustrates pulse control by retriggering and early clear.

The 'LS122 and 'LS123 are provided enough Schmitt hysteresis to ensure jitter-free triggering from the B input with transition rates as slow as 0.1 millivolt per nanosecond.

The R_{int} in nominall 10 kΩ for '122 and 'LS122.

SN54122, SN54LS122 . . . J OR W PACKAGE
SN74122 . . . N PACKAGE
SN74LS122 . . . D OR N PACKAGE
(TOP VIEW) (SEE NOTES 1 THRU 4)

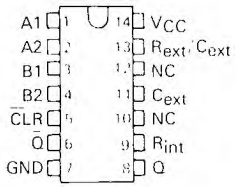

NOTES: 1. An external timing capacitor may be connected between C_{ext} and R_{ext}/C_{ext} (positive).
2. To use the internal timing resistor of '122 or 'LS122, connect R_{int} to V_{CC}.
3. For improved pulse duration accuracy and repeatability, connect an external resistor between R_{ext}/C_{ext} and V_{CC} with R_{int} open-circuited.
4. To obtain variable pulse durations, connect an external variable resistance between R_{int} or R_{ext}/C_{ext} and V_{CC}.

SN54123, SN54130, SN54LS123 . . . J OR W PACKAGE
SN74123, SN74130 . . . N PACKAGE
SN74LS123 . . . D OR N PACKAGE
(TOP VIEW) (SEE NOTES 1 THRU 4)

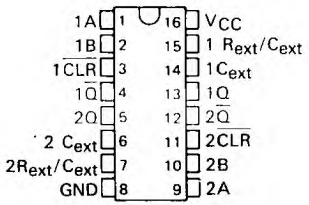

SN54LS122 . . . FK PACKAGE
(TOP VIEW) (SEE NOTES 1 THRU 4)

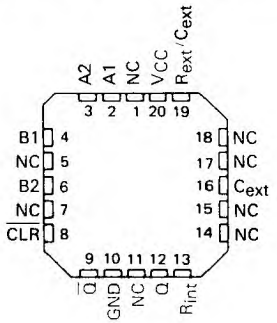

SN54LS123 . . . FK PACKAGE
(TOP VIEW) (SEE NOTES 1 THRU 4)

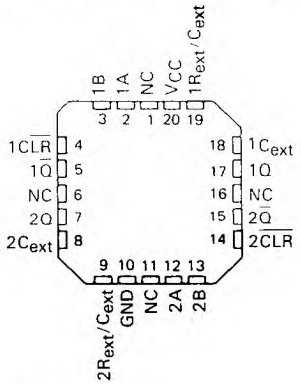

NC – No internal connection

PRODUCTION DATA documents contain information current as of publication date. Products conform to specifications per the terms of Texas Instruments standard warranty. Production processing does not necessarily include testing of all parameters.

description (continued)

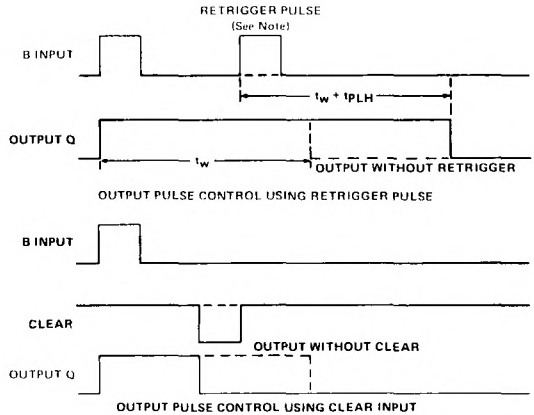

NOTE: Retrigger pulses starting before 0.22 C_{ext} (in picofrads) nanoseconds after the initial trigger pulse will be ignored and the output duration will remain unchanged.

FIGURE 1–TYPICAL INPUT/OUTPUT PULSES

'122, 'LS122
FUNCTION TABLE

INPUTS					OUTPUTS	
CLEAR	A1	A2	B1	B2	Q	$\bar{Q}$
L	X	X	X	X	L	H
X	H	H	X	X	L†	H†
X	X	X	L	X	L†	H†
X	X	X	X	L	L†	H†
H	L	X	↑	H	⎍	⎎
H	L	X	H	↑	⎍	⎎
H	X	L	↑	H	⎍	⎎
H	X	L	H	↑	⎍	⎎
H	H	↓	H	H	⎍	⎎
H	↓	↓	H	H	⎍	⎎
H	↓	H	H	H	⎍	⎎
↑	L	X	H	H	⎍	⎎
↑	X	L	H	H	⎍	⎎

'123, '130, 'LS123
FUNCTION TABLE

INPUTS			OUTPUTS	
CLEAR	A	B	Q	$\bar{Q}$
L	X	X	L	H
X	H	X	L†	H†
X	X	L	L†	H†
H	L	↑	⎍	⎎
H	↓	H	⎍	⎎
↑	L	H	⎍	⎎

See explanation of function tables on page

† These lines of the functional tables assume that the indicated steady-state conditons at the A and B inputs have been set up long enough to complete any pulse started before the set up.

TEXAS INSTRUMENTS
POST OFFICE BOX 655012 • DALLAS, TEXAS 75265

logic diagram (positive logic)

'122, 'LS122

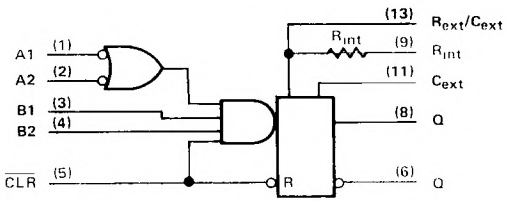

logic symbol†

'122, 'LS122

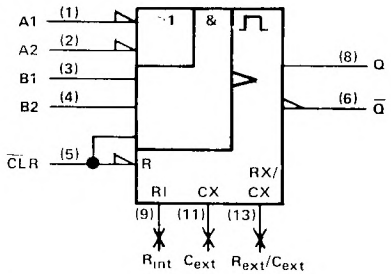

R_{int} is nominally 10 kΩ for '122 and 'LS122

logic diagram (positive logic) (each multivibrator)

'123, '130, 'LS123

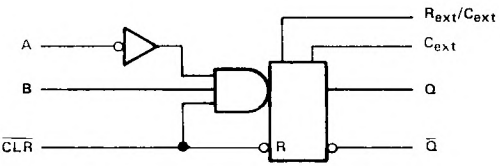

logic symbol†

'123, '130, 'LS123

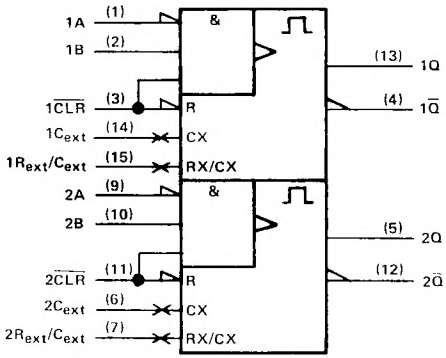

Pin numbers shown are for D, J, N, and W packages.

†These symbols are in accordance with ANSI/IEEE Std 91-1984 and IEC Publication 617-12.

schematics of inputs and outputs

'122, '123, '130 CIRCUITS

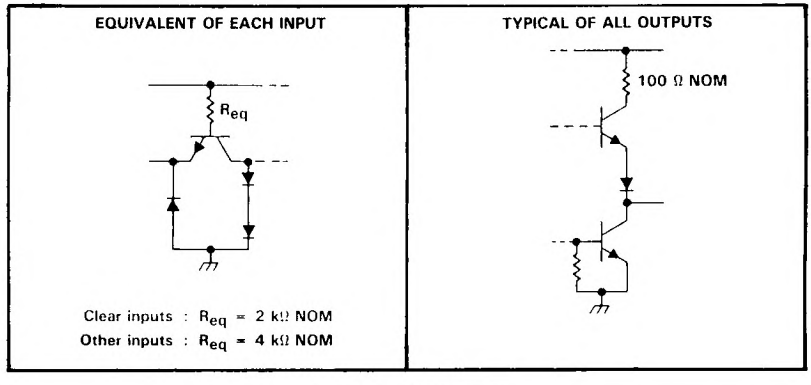

'LS122, 'LS123 CIRCUITS

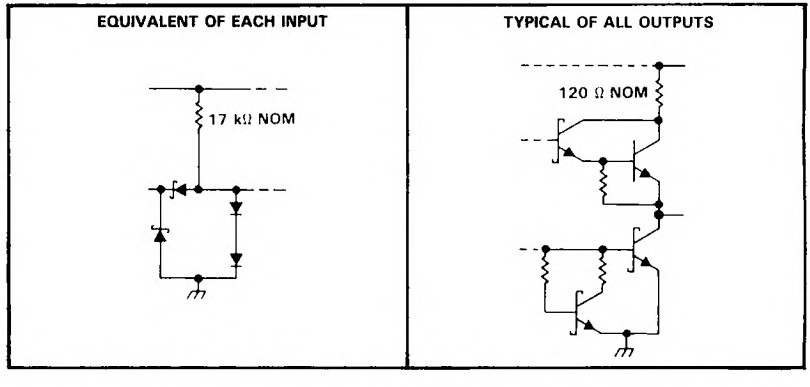

absolute maximum ratings over operating free-air temperature range (unless otherwise noted)

Supply voltage, V_{CC} (see Note 1) . . . . . 7 V
Input voltage: '122, '123, '130 . . . . . 5.5 V
'LS122, 'LS123 . . . . . 7 V
Operating free-air temperature range: SN54' . . . . . −55°C to 125°C
SN74' . . . . . 0°C to 70°C
Storage temperature range . . . . . −65°C to 150°C

NOTE 1: Voltage values are with respect to network ground terminal.

TEXAS INSTRUMENTS
POST OFFICE BOX 655012 • DALLAS, TEXAS 75265

recommended operating conditions

	SN54'			SN74'			UNIT
	MIN	NOM	MAX	MIN	NOM	MAX	
Supply voltage, V_{CC}	4.5	5	5.5	4.75	5	5.25	V
High-level output current, I_{OH}			−800			−800	μA
Low-level output current, I_{OL}			16			16	mA
Pulse duration, t_w	40			40			ns
External timing resistance, R_{ext}	5		25	5		50	kΩ
External capacitance, C_{ext}	No restriction			No restriction			
Wiring capacitance at R_{ext}/C_{ext} terminal			50			50	pF
Operating free-air temperature, T_A	−55		125	0		70	°C

electrical characteristics over recommended free-air operating temperature range (unless otherwise noted)

PARAMETER		TEST CONDITIONS†	'122			'123, '130			UNIT
			MIN	TYP‡	MAX	MIN	TYP‡	MAX	
V_{IH}	High-level input voltage		2						V
V_{IL}	Low-level input voltage				0.8			0.8	V
V_{IK}	Input clamp voltage	V_{CC} = MIN, I_I = −12 mA			−1.5			−1.5	V
V_{OH}	High-level output voltage	V_{CC} = MIN, I_{OH} = −400 μA, See Note 5	2.4	3.4		2.4	3.4		V
V_{OL}	Low-level output voltage	V_{CC} = MIN, I_{OL} = 16 mA, See Note 5		0.2	0.4		0.2	0.4	V
I_I	Input current at maximum input voltage	V_{CC} = MAX, V_I = 5.5 V			1			1	mA
I_{IH}	High-level input current	V_{CC} = MAX, V_I = 2.4 V			40			40	μA
					80			80	
I_{IL}	Low-level input current	V_{CC} = MAX, V_I = 0.4 V			−1.6			−1.6	mA
					−3.2			−3.2	
	Short-circuit output current§	V_{CC} = MAX, See Note 5	−10		−40	−10		−40	mA
	Supply current (quiescent or triggered)	V_{CC} = MAX, See Notes 6 and 7		23	36		46	66	mA

† For conditions shown as MIN or MAX, use the appropriate value specified under recommended operating conditions.
‡ All typical values are at V_{CC} = 5 V, T_A = 25°C.
§ Not more than one output should be shorted at a time.
NOTES: 5. Ground C_{ext} to measure V_{OH} at Q, V_{OL} at $\overline{Q}$, or I_{OS} at Q. C_{ext} is open to measure V_{OH} at $\overline{Q}$, V_{OL} at Q, or I_{OS} at $\overline{Q}$.
6. Quiescent I_{CC} is measured (after clearing) with 4.5 V applied to all clear and A inputs, B inputs grounded, all outputs open and R_{ext} = 25 kΩ. R_{int} of '122 is open.
7. I_{CC} is measured in the triggered state with 2.4 V applied to all clear and B inputs, A inputs grounded, all outputs open, C_{ext} = 0.02 μF, and R_{ext} = 25 kΩ. R_{int} of '122 is open.

switching characteristics, V_{CC} = 5 V, T_A = 25°C, see note 8

PARAMETER¶	FROM (INPUT)	TO (OUTPUT)	TEST CONDITIONS	'122, '130			'123			UNIT
				MIN	TYP	MAX	MIN	TYP	MAX	
t_{PLH}	A	Q	C_{ext} = 0, C_L = 15 pF, R_{ext} = 5 kΩ, R_L = 400 Ω		22	33		22	33	ns
	B				19	28		19	28	
t_{PHL}	A	$\overline{Q}$			30	40		30	40	ns
	B				27	36		27	36	
t_{PHL}	Clear	Q			18	27		18	27	ns
t_{PLH}		$\overline{Q}$			30	40		30	40	
t_{wQ} (min)	A or B	Q			45	65		45	76	ns
t_{wQ}	A or B	Q	C_{ext} = 1000 pF, C_L = 15 pF, R_{ext} = 10 kΩ, R_L = 400 Ω	3.08	3.42	3.76	2.76	3.03	3.37	μs

¶ t_{PLH} = propagation delay time, low-to-high-level output
t_{PHL} = propagation delay time, high-to-low-level output
t_{wQ} = duration of pulse at output Q.
NOTE 8: Load circuits and voltage waveforms are shown in Section 1.

recommended operating conditions

	SN54LS'			SN74LS'			UNIT
	MIN	NOM	MAX	MIN	NOM	MAX	
Supply voltage, V_{CC}	4.5	5	5.5	4.75	5	5.25	V
High-level output current, I_{OH}			−400			−400	μA
Low-level output current, I_{OL}			4			8	mA
Pulse duration, t_w	40			40			ns
External timing resistance, R_{ext}	5		180	5		260	kΩ
External capacitance, C_{ext}	No restriction			No restriction			
Wiring capacitance at R_{ext}/C_{ext} terminal			50			50	pF
Operating free-air temperature, T_A	−55		125	0		70	°C

electrical characteristics over recommended operating free-air temperature range (unless otherwise noted)

PARAMETER		TEST CONDITIONS†			SN54LS'			SN74LS'			UNIT
					MIN	TYP‡	MAX	MIN	TYP‡	MAX	
V_{IH}	[illegible] input voltage				2			2			V
V_{IL}	[illegible] input voltage						0.7			0.8	V
V_{IK}	Input clamp voltage	V_{CC} = MIN,	I_I = −18 mA				−1.5			−1.5	V
V_{OH}	High-level output voltage	V_{CC} = MIN, V_{IL} = V_{IL}max	V_{IH} = 2 V, I_{OH} = −400 μA		2.5	3.5		2.7	3.5		V
V_{OL}	Low-level output voltage	V_{CC} = MIN, V_{IL} = V_{IL}max	V_{IH} = 2 V,	I_{OL} = 4 mA		0.25	0.4		0.25	0.4	V
				I_{OL} = 8 mA					0.35	0.5	
I_I	Input current at maximum input voltage	V_{CC} = MAX,	V_I = 7 V				0.1			0.1	mA
I_{IH}	[illegible] input current	V_{CC} = MAX,	V_I = 2.7 V				20			20	μA
I_{IL}	[illegible]	V_{CC} = MAX,	V_I = 0.4 V				−0.4			−0.4	
I_{OS}	Short-circuit output current§	V_{CC} = MAX			−20		−100	−20		−100	mA
I_{CC}	Supply current (quiescent or triggered)	V_{CC} = MAX,	See Note 13	'LS122		6	11		6	11	mA
				'LS123		12	20		12	20	

†For conditions shown as MIN or MAX, use the appropriate value specified under recommended operating conditions.
‡All typical values are at V_{CC} = 5 V, T_A = 25°C.
§Not more than one output should be shorted at a time and duration of the short-circuit should not exceed one second.
NOTES: 12. To measure V_{OH} at Q, V_{OL} at Q, or I_{OS} at Q, ground R_{ext}/C_{ext}, apply 2 V to B and clear, and pulse A from 2 V to 0 V.
13. With all outputs open and 4.5 V applied to all data and clear inputs, I_{CC} is measured after a momentary ground, then 4.5 V, is applied to A or B inputs.

switching characteristics, V_{CC} = 5 V, T_A = 25°C (see note 8)

PARAMETER¶	FROM (INPUT)	TO (OUTPUT)	TEST CONDITIONS		MIN	TYP	MAX	UNIT
t_{PLH}	A	Q	C_{ext} = 0, C_L = 15 pF,	R_{ext} = 5 kΩ, R_L = 2 kΩ		23	33	ns
	B					23	44	
t_{PHL}	A	$\overline{Q}$				32	45	ns
	B					34	56	
t_{PHL}	Clear	Q				20	27	ns
t_{PLH}		$\overline{Q}$				28	45	
t_{wQ} (min)	A or B	Q				116		ns
t_{wQ}	A or B	Q	C_{ext} = 1000 pF, C_L = 15 pF,	R_{ext} = 10 kΩ, R_L = 2 kΩ	4	4.5	5	μs

¶t_{PLH} = propagation delay time, low-to-high-level output
t_{PHL} = propagation delay time, high-to-low-level output
t_{wQ} = duration of pulse at output Q.
NOTE 8: Load circuits and voltage waveforms are shown in Section 1.

TEXAS INSTRUMENTS
POST OFFICE BOX 655012 • DALLAS, TEXAS 75265

TYPICAL APPLICATION DATA FOR '122, '123, '130

For pulse durations when $C_{ext} \leq 1000$ pF, see Figure 4.

The output pulse duration is primarily a function of the external capacitor and resistor. For $C_{ext} > 1000$ pF, the output pulse duration (t_w) is defined as:

$$t_w = K \cdot R_T \cdot C_{ext}\left(1 + \frac{0.7}{R_T}\right)$$

where

K is 0.32 for '122, 0.28 for '123 and '130

R_T is in kΩ (internal or external timing resistance.)

C_{ext} is in pF

t_w is in ns

To prevent reverse voltage across C_{ext}, it is recommended that the method shown in Figure 2 be employed when using electrolytic capacitors and in applications utilizing the clear function. In all applications using the diode, the pulse duration is:

$$t_w = K_D \cdot R_T \cdot C_{ext}\left(1 + \frac{0.7}{R_T}\right)$$

K_D is 0.28 for '122, 0.25 for '123 and '130

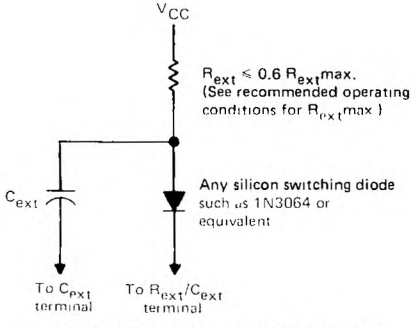

TIMING COMPONENT CONNECTIONS WHEN $C_{ext} \leq 1000$ pF AND CLEAR IS USED

FIGURE 2

Applications requiring more precise pulse durations (up to 28 seconds) and not requiring the clear feature can best be satisfied with the '121.

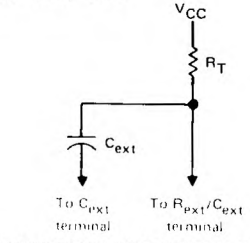

TIMING COMPONENT CONNECTIONS

FIGURE 3

TYPICAL OUTPUT PULSE DURATION
vs
EXTERNAL TIMING CAPACITANCE

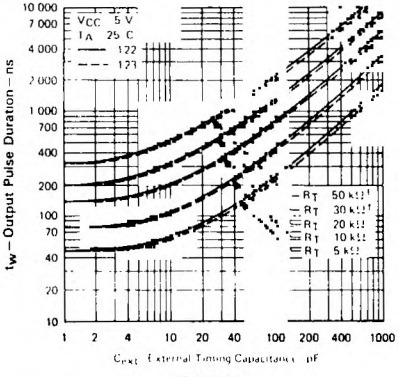

FIGURE 4

†These values of resistance exceed the maximum recommended for use over the full temperature range of the SN54' circuits.

2 TTL Devices

TYPICAL APPLICATION DATA FOR 'LS122, 'LS123

The basic output pulse duration is essentially determined by the values of external capacitance and timing resistance. For pulse durations when $C_{ext} \leq 1000$ pF, use Figure 6, or use Figure 7 where the pulse duration may be defined as:

$$t_W = K \cdot R_T \cdot C_{ext}$$

When $C_{ext} \geq 1\ \mu F$, the output pulse width is defined as:

$$t_W = 0.33 \cdot R_T \cdot C_{ext}$$

For the above two equations, as applicable;

K is multiplier factor, see Figure 7
R_T is in kΩ (internal or external timing resistance)
C_{ext} is in pF
t_W is in ns

For maximum noise immunity, system ground should be applied to the C_{ext} node, even though the C_{ext} node is already tied to the ground lead internally. Due to the timing scheme used by the 'LS122 and 'LS123, a switching diode is not required to prevent reverse biasing when using electolytic capacitors.

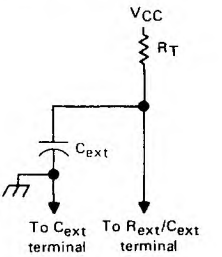

TIMING COMPONENT CONNECTIONS

FIGURE 5

'LS122, 'LS123
TYPICAL OUTPUT PULSE DURATION
vs
EXTERNAL TIMING CAPACITANCE

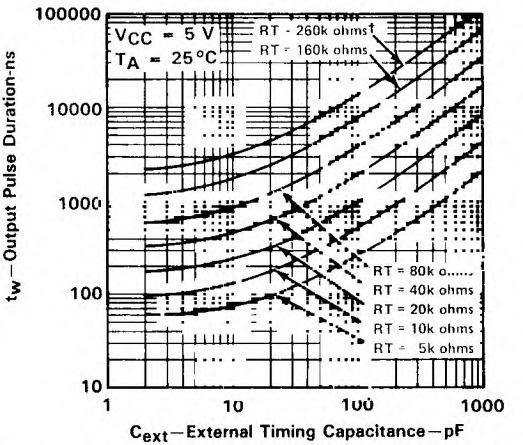

†This value of resistance exceeds the maximum recommended for use over the full temperature range of the SN54LS circuits

FIGURE 6

TEXAS INSTRUMENTS
POST OFFICE BOX 655012 • DALLAS, TEXAS 75265

TYPICAL APPLICATION DATA FOR 'LS122, 'LS123†

MULTIPLIER FACTOR
vs
EXTERNAL CAPACITOR

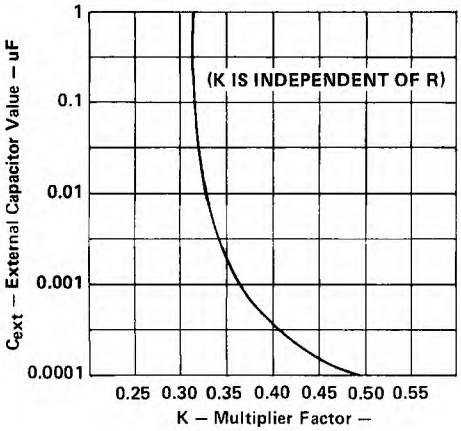

FIGURE 7

DISTRIBUTION OF UNITS
vs
OUTPUT PULSE DURATION

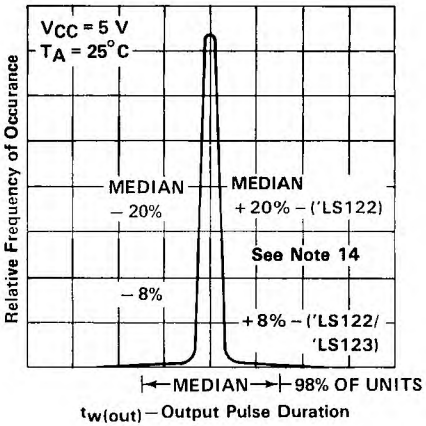

FIGURE 8

VARIATION IN OUTPUT PULSE DURATION
vs
SUPPLY VOLTAGE

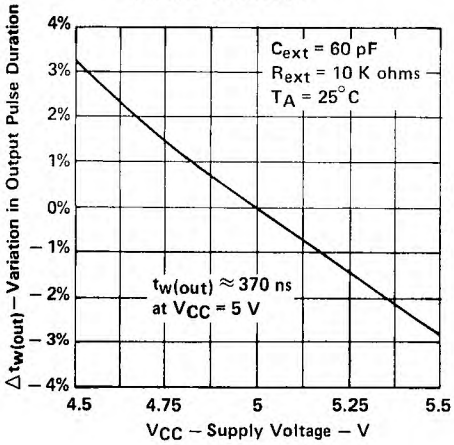

FIGURE 9

VARIATION IN OUTPUT PULSE DURATION
vs
FREE-AIR TEMPERATURE

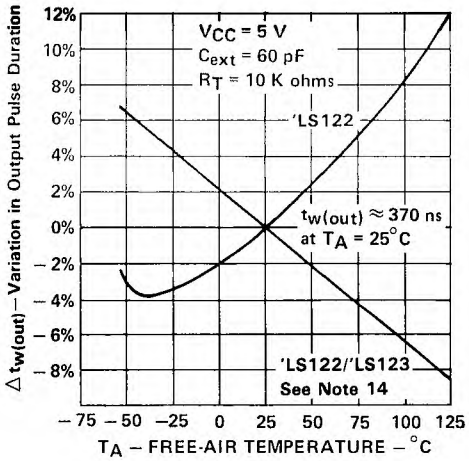

FIGURE 10

NOTE 14: For the 'LS122, the internal timing resistor, R_{int} was used. For the 'LS122/123, an external timing resistor was used for R_T.
†Data for temperatures below 0°C and above 70°C and for suply voltages below 4.75 V and above 5.25 V are applicable for SN54LS122 and SN54LS123 only.

DECEMBER 1983 – REVISED MARCH 1988

- **Two Independent VCOs in a 16-Pin Package**
- **Output Frequency Set by Single External Component:**
  Capacitor for Fixed- or Variable-Frequency Operation
- **Separate Supply Voltage Pins for Isolation of Frequency Control Inputs and Oscillators from Output Circuitry**
- **Highly Stable Operation over Specified Temperature and/or Supply Voltage Ranges**
- **Typical f_{max} . . . . . 85 MHz**
  Typical Power Dissipation . . . . . 525 mW
- **Frequency Spectrum . . . 1 Hz to 60 MHz**

SN54S124 . . . J OR W PACKAGE
SN74S124 . . . D OR N PACKAGE
(TOP VIEW)

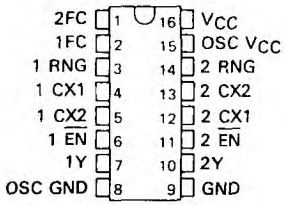

SN54S124 . . . FK PACKAGE
(TOP VIEW)

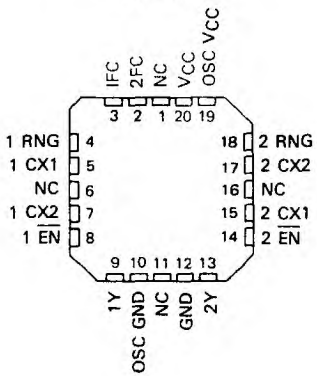

NC – No internal connection

description

The 'S124 features two independent voltage-controlled oscillators (VCO) in a single monolithic chip. The output frequency of each VCO is established by an external capacitor in combination with two voltage-sensitive inputs, one for frequency range and one for frequency control. These inputs can be used to vary the output frequency as shown under typical characteristcs. These highly stable oscillators can be set to operate at any frequency typically between 0.12 hertz and 85 megahertz. Under the conditions used in Figure 1, the output frequency can be approximated as follows:

$$f_o = \frac{5 \times 10^{-2}}{C_{ext}}$$

where: f_o = output frequency in hertz
C_{ext} = external capacitance in farads.

logic

While the enable input is low, the output is enabled. While the enable input is high, the output is high.

These devices can operate from a single 5-volt supply. However, one set of supply-voltage and ground pins (V_{CC} and GND) is provided for the enable, synchronization-gating, and output sections, and a separate set ($\ominus V_{CC}$ and $\ominus$GND) is provided for the oscillator and associated frequency-control circuits so that effective isolation can be accomplished in the system.

The enable input of these devices starts or stops the output pulses when it is low or high, respectively. The internal oscillator of the 'S124 is started and stopped by the enable input. The enable input is one standard load; it and the buffered output operate at standard Schottky-clamped TTL levels.

The pulse synchronization-gating section ensures that the first output pulse is neither clipped nor extended. Duty cycle of the square-wave output is fixed at approximately 50 percent.

The SN54S124 is characterized for operation over the full military temperature range of −55°C to 125°C; the SN74S124 is characterized for operation from 0°C to 70°C.

PRODUCTION DATA documents contain information current as of publication date. Products conform to specifications per the terms of Texas Instruments standard warranty. Production processing does not necessarily include testing of all parameters.

logic symbol†

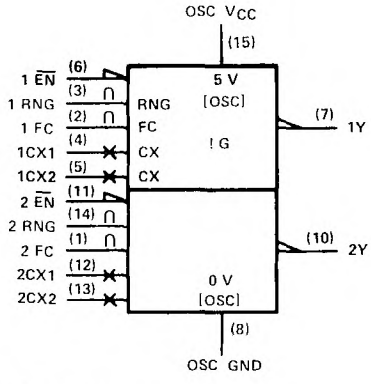

†This symbol is in accordance with ANSI/IEEE Std 91-1984 and IEC Publication 617-12.
Pin numbers shown are for D, J, N, and W packages.

schematics of inputs and outputs

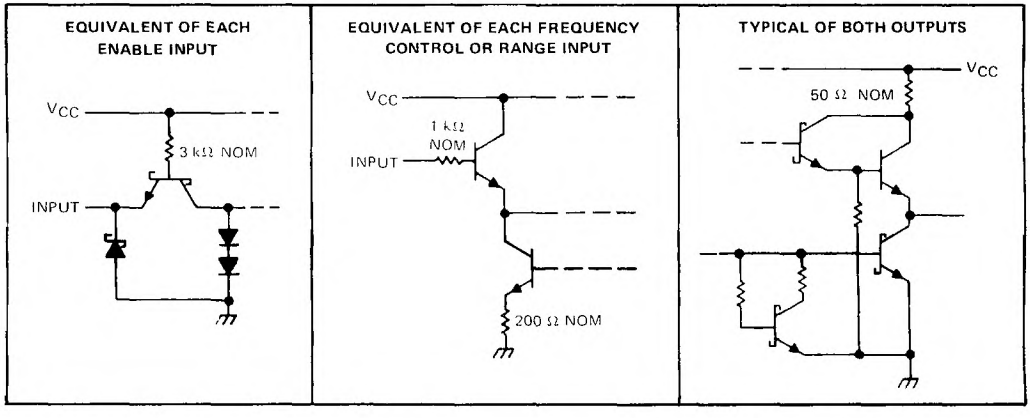

absolute maximum ratings over operating free-air temperature range (unless otherwise noted)

Supply voltage, V_{CC} (See Notes 1 and 2) 7V
Input voltage . . . . . 5.5 V
Operating free-air temperature range: SN54S124 . . . . . −55°C to 125°C
SN74S124 . . . . . 0°C to 70°C
Storage temperature range . . . . . −65°C to 150°C

NOTES. 1. Voltage values are with respect to the appropriate ground terminal.
2. Throughout this data sheet, the symbol V_{CC} is used for the voltage applied to both the V_{CC} and $\ominus V_{CC}$ terminals, unless otherwise noted.

TEXAS INSTRUMENTS
POST OFFICE BOX 655012 • DALLAS, TEXAS 75265

recommended operating conditions

	SN54S124			SN74S124			UNIT
	MIN	NOM	MAX	MIN	NOM	MAX	
Supply voltage, V_{CC} (see Note 1)	4.5	5	5.5	4.75	5	5.25	V
Input voltage at frequency control or range input, $V_{I(freq)}$ or $V_{I(rng)}$	1		5	1		5	V
High-level output current, I_{OH}			−1			−1	mA
Low-level output current, I_{OL}			20			20	mA
Output frequency (enabled), f_o	1			1			Hz
			60			60	MHz
Operating free-air temperature, T_A	−55		125	0		70	°C

electrical characteristics over recommended operating free-air temperature range (unless otherwise noted)

PARAMETER			TEST CONDITIONS†		MIN	TYP‡	MAX	UNIT
V_{IH}	High-level input voltage at enable				2			V
V_{IL}	Low-level input voltage at enable						0.8	V
V_{IK}	Input clamp voltage at enable		V_{CC} = MIN, I_I = −18 mA				−1.2	V
V_{OH}	High-level output voltage		V_{CC} = MIN, V_{IH} = 2 V, I_{OH} = −1 mA	SN54S'	2.5	3.4		V
				SN74S'	2.7	3.4		
V_{OL}	Low-level output voltage		V_{CC} = MIN, V_{IL} = 0.8 V, I_{OL} = 20 mA				0.5	V
I_I	Input current	Freq control or range	V_{CC} = MAX	V_I = 5 V		10	50	μA
				V_I = 1 V		1	15	
I_I	Input current at maximum input voltage	Enable	V_{CC} = MAX, V_I = 5.5 V				1	mA
I_{IH}	High-level input current	Enable	V_{CC} = MAX, V_I = 2.7 V				50	μA
I_{IL}	Low-level input current	Enable	V_{CC} = MAX, V_I = 0.5 V				−2	mA
I_{OS}	Short-circuit output current§		V_{CC} = MAX		−40		−100	mA
I_{CC}	Supply current, total into V_{CC} and ⊖ V_{CC}		V_{CC} = MAX, See Note 3			105	150	mA
			V_{CC} = MAX, T_A = 125°C, See Note 3	W package only			110	

†For conditions shown as MIN or MAX, use the appropriate value specified under recommended operating conditions.
‡All typical values are at V_{CC} = 5 V, T_A = 25°C.
§Not more than one output should be shorted at a time and duration of the short-circuit should not exceed one second
NOTE 3: I_{CC} is measured with the outputs disabled and open.

switching characteristics, V_{CC} = 5 V, R_L = 280 Ω, C_L = 15 pF, T_A = 25°C (see note 4)

PARAMETER		TEST CONDITIONS		MIN	TYP	MAX	UNIT
f_o	Output frequency	C_{ext} = 2 pF	$V_{I(freq)}$ = 2.5 V, $V_{I(rng)}$ = 1 V	60	85		MHz
			V_I = 1 V, $V_{I(rng)}$ = 5 V	25	40		
	Output duty cycle	C_{ext} = 8.3 pF to [illegible] μF			50%		
t_{PHL}	Propagation delay time, high-to-low-level output from enable	f_o = 1 Hz to 20 MHz			$\frac{1.4}{f_{o(Hz)}}$		s
		f_o = 20 MHz			70		ns

NOTE 4: Load circuits and voltage waveforms are shown in Section 1.

TYPICAL CHARACTERISTICS

BASE OUTPUT FREQUENCY
vs
EXTERNAL CAPACITANCE

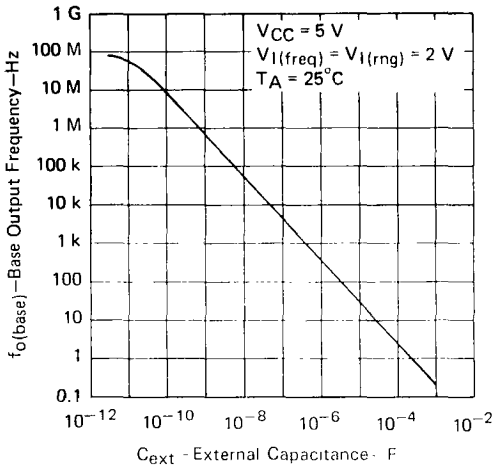

FIGURE 1

NORMALIZED OUTPUT FREQUENCY
vs
INPUT VOLTAGE

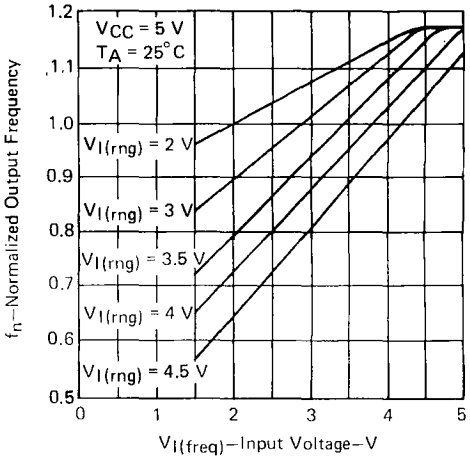

FIGURE 2

NOTE: $f_o = f_n \times f_{o(base)}$

TEXAS INSTRUMENTS
POST OFFICE BOX 655012 • DALLAS, TEXAS 75265

DECEMBER 1983 – REVISED MARCH 1988

- **Quad Bus Buffers**
- **3-State Outputs**
- **Separate Control for Each Channel**

SN54125, SN54126, SN54LS125A, SN54LS126A . . . J OR W PACKAGE
SN74125, SN74126 . . . N PACKAGE
SN74LS125A, SN74LS126A . . . D OR N PACKAGE
(TOP VIEW)

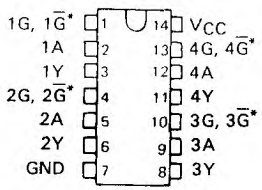

SN54LS125A, SN54LS126A . . . FK PACKAGE
(TOP VIEW)

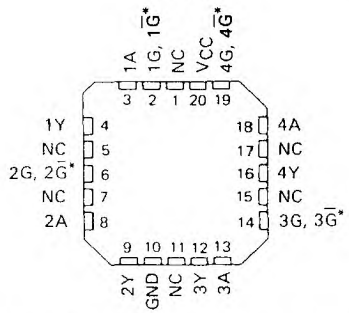

*$\overline{G}$ on '125 and 'LS125A; G on 126 and 'LS126A

NC – No internal connection

description

These bus buffers feature three-state outputs that, when enabled, have the low impedence characteristics of a TTL output with additional drive capability at high logic levels to permit driving heavily loaded bus lines without external pull-up resistors, when disabled, both output transistors are turned off presenting a high-impedance state to the bus so the output will act neither as a significant load nor as a driver. The '125 and 'LS125A outputs are disabled when $\overline{G}$ is high. The '126 and 'LS126A outputs are disabled when G is low.

logic diagram (each gate)

'125, 'LS125A

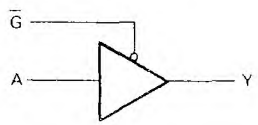

'126, LS126A

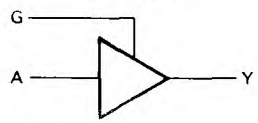

positive logic Y = A

logic symbols†

'125 'LS125A '126 'LS126A

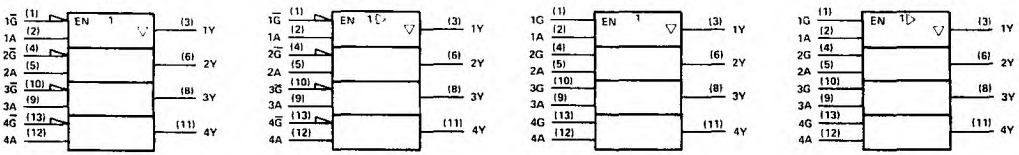

†These symbols are in accordance with ANSI/IEEE Std. 91-1984 and IEC Publication 617-12.
Pin numbers shown are for D, J, N, and W packages

PRODUCTION DATA documents contain information current as of publication date. Products conform to specifications per the terms of Texas Instruments standard warranty. Production processing does not necessarily include testing of all parameters.

schematics (each gate)

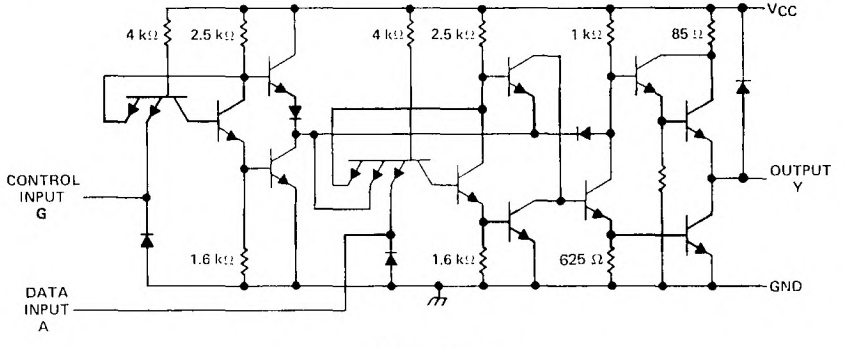

'125 CIRCUITS

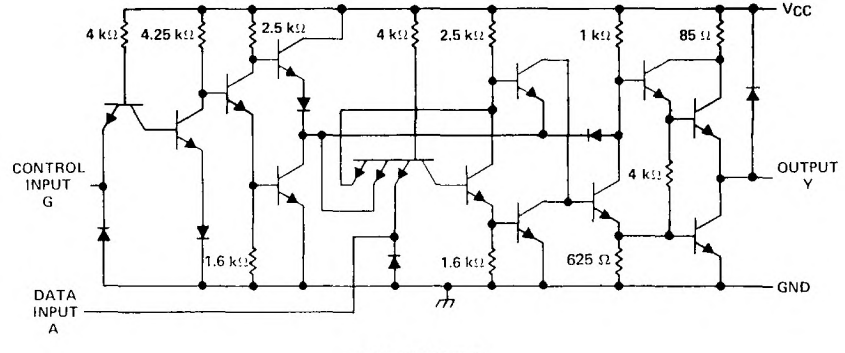

'126 CIRCUITS

absolute maximum ratings over operating free-air temperature range (unless otherwise noted)

Supply voltage, V_{CC} (See Note 1) . . . . . 7 V
Input voltage . . . . . 5.5 V
Operating free-air temperature range: SN54' . . . . . −55°C to 125°C
SN74' . . . . . 0°C to 70°C
Storage temperature range . . . . . −65°C to 150°C

NOTE 1: Voltage values are with respect to network ground terminal.

TEXAS INSTRUMENTS
POST OFFICE BOX 655012 • DALLAS, TEXAS 75265

schematics (each gate)

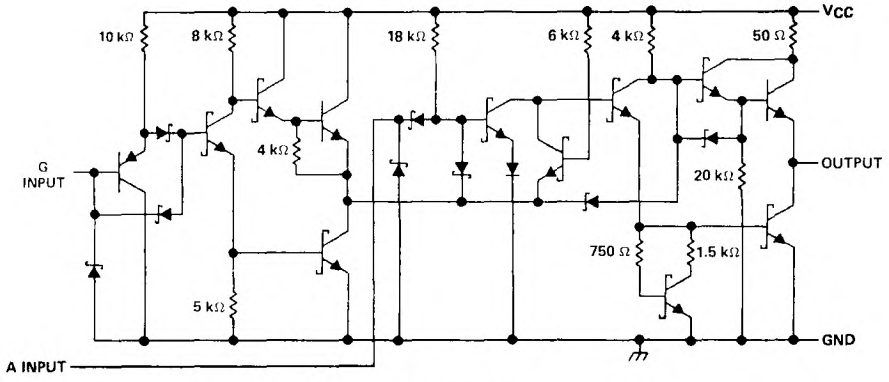

'LS125A CIRCUITS

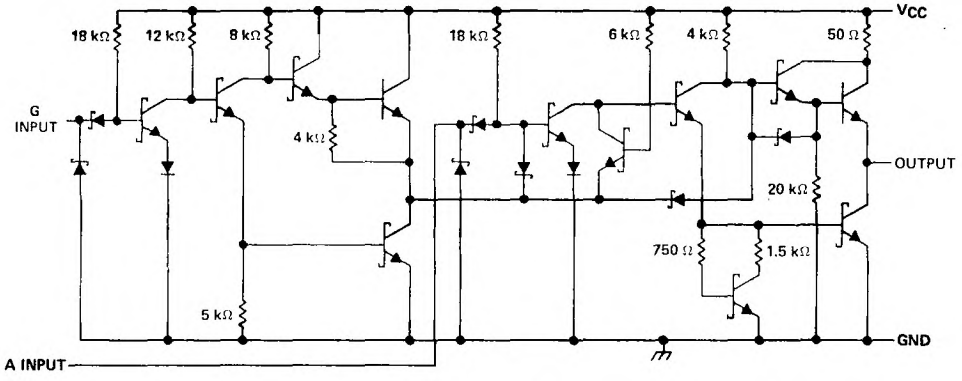

'LS126A CIRCUITS

Resistor values shown are nominal.

absolute maximum ratings over operating free-air temperature range (unless otherwise noted)

Supply voltage, V_{CC} (see Note 1) . . . . . 7 V
Input voltage . . . . . 7 V
Operating free-air temperature range: SN54' . . . . . −55°C to 125°C
SN74' . . . . . 0°C to 70°C
Storage temperature range . . . . . −65°C to 150°C

NOTE 1: Voltage values are with respect to network ground terminals.

recommended operating conditions

		SN54125, SN54126			SN74125, SN74126			UNIT
		MIN	NOM	MAX	MIN	NOM	MAX	
V_{CC}	Supply voltage	4.5	5	5.5	4.75	5	5.25	V
V_{IH}	High-level input voltage	2			2			V
V_{IL}	Low-level input voltage			0.8			0.8	V
I_{OH}	High-level output current			−2			−5.2	mA
I_{OL}	Low-level output current			16			16	mA
T_A	Operating free-air temperature	−55		125	0		70	°C

electrical characteristics over recommended operating free-air temperature range (unless otherwise noted)

PARAMETER	TEST CONDITIONS†		SN54125, SN54126			SN74125, SN74126			UNIT
			MIN	TYP‡	MAX	MIN	TYP‡	MAX	
V_{IK}	V_{CC} = MIN, I_I = −12 mA				−1.5			−1.5	V
V_{OH}	V_{CC} = MIN, V_{IH} = 2 V, V_{IL} = 0.8 V	I_{OH} = −2 mA	2.4	3.3					V
		I_{OH} = −5.2 mA				2.4	3.1		
V_{OL}	V_{CC} = MIN, V_{IH} = 2 V, I_{OL} = 16 mA	V_{IL} = 0.8 V,			0.4			0.4	V
I_{OZ}	V_{CC} = MAX, V_{IH} = 2 V, V_{IL} = 0.8 V	V_O = 2.4 V			40			40	μA
		V_O = 0.4 V			−40			−40	
I_I	V_{CC} = MAX, V_I = 5.5 V				1			1	mA
I_{IH}	V_{CC} = MAX, V_I = 2.4 V				40			40	μA
I_{IL}	V_{CC} = MAX, V_I = 0.4 V				−1.6			−1.6	mA
I_{OS}§	V_{CC} = MAX		−30		−70	−28		−70	mA
I_{CC}	V_{CC} = MAX, (see Note 2)	'125		32	54		32	54	mA
		'126		36	62		36	62	

† For conditions shown as MIN or MAX, use the appropriate value specified under recommended operating conditions.
‡ All typical values are at V_{CC} = 5 V, T_A = 25°C.
§ Not more than one output should be shorted at a time.
NOTE 2: Data inputs = 0.V; output control = 4.5 V for '125 and 0 V for '126.

switching characteristics, V_{CC} = 5 V, T_A = 25°C (see note 3)

PARAMETER	TEST CONDITIONS		SN54/74125			SN54/74126			UNIT
			MIN	TYP	MAX	MIN	TYP	MAX	
t_{PLH}	R_L = 400 Ω,	C_L = 50 pF		8	13		8	13	ns
t_{PHL}				12	18		12	18	ns
t_{PZH}				11	17		11	18	ns
t_{PZL}				16	25		16	25	ns
t_{PHZ}	R_L = 400 Ω,	C_L = 5 pF		5	8		10	16	ns
t_{PLZ}				7	12		12	18	ns

NOTE 3: Load circuits and voltage waveforms are shown in Section 1.

TEXAS INSTRUMENTS
POST OFFICE BOX 655012 • DALLAS, TEXAS 75265

recommended operating conditions

		SN54LS125A SN54LS126A			SN74LS125A SN74LS126A			UNIT
		MIN	NOM	MAX	MIN	NOM	MAX	
V_{CC}	Supply voltage	4.5	5	5.5	4.75	5	5.25	V
V_{IH}	High-level input voltage	2			2			V
V_{IL}	Low-level input voltage			0.7			0.8	V
I_{OH}	High-level output current			−1			−2.6	mA
I_{OL}	Low-level output current			12			24	mA
T_A	Operating free-air temperature	−55		125	0		70	°C

electrical characteristics over recommended operating free-air temperature range (unless otherwise noted)

PARAMETER	TEST CONDITIONS†			SN54LS125A SN54LS126A			SN74LS125A SN74LS126A			UNIT
				MIN	TYP‡	MAX	MIN	TYP‡	MAX	
V_{IK}	V_{CC} = MIN,	I_I = −18 mA				−1.5			−1.5	V
V_{OH}	V_{CC} = MIN, V_{IH} = 2 V	V_{IL} = 0.7 V,	I_{OH} = −1 mA	2.4						V
		V_{IL} = 0.8 V,	I_{OH} = −2.6 mA				2.4			
V_{OL}	V_{CC} = MIN, V_{IH} = 2 V	V_{IL} = 0.7 V,	I_{OL} = 12 mA		0.25	0.4				V
		V_{IL} = 0.8 V,	I_{OL} = 12 mA					0.25	0.4	
		V_{IL} = 0.8 V,	I_{OL} = 24 mA					0.35	0.5	
I_{OZ}	V_{CC} = MAX, V_{IH} = 2 V	V_{IL} = 0.7 V	V_O = 2.4 V			20				μA
			V_O = 0.4 V			−20				
		V_{IL} = 0.8 V	V_O = 2.4 V						20	
			V_O = 0.4 V						−20	
I_I	V_{CC} = MAX,	V_I = 7 V				0.1			0.1	mA
I_{IH}	V_{CC} = MAX,	V_I = 2.7 V				20			20	μA
I_{IL}	V_{CC} = MAX, V_I = 0.4 V	'LS125A-G inputs				−0.2			−0.2	mA
		'LS125A-A inputs; 'LS126A All inputs				−0.4			−0.4	mA
I_{OS}§	V_{CC} = MAX			−40		−225	−40		−225	mA
I_{CC}	V_{CC} = MAX, (see Note 2)	'LS125A			11	20		11	20	mA
		'LS126A			12	22		12	22	

† For conditions shown as MIN or MAX, use the appropriate value specified under recommended operating conditions.
‡ All typical values are at V_{CC} = 5 V, T_A = 25°C.
§ Not more than one output should be shorted at a time, and duration of the short circuit should not exceed one second.
NOTE 2: Data inputs = 0 V, Output controls = 4.5 V for 'LS125A and 0 V for 'LS126A.

switching characteristics, V_{CC} = 5 V, T_A = 25°C (see note 3)

PARAMETER	TEST CONDITIONS		SN54/74LS125A			SN54/74LS126A			UNIT
			MIN	TYP	MAX	MIN	TYP	MAX	
t_{PLH}	R_L = 667 Ω,	C_L = 45 pF		9	15		9	15	ns
t_{PHL}				7	18		8	18	ns
t_{PZH}				12	20		16	25	ns
t_{PZL}				15	25		21	35	ns
t_{PHZ}	R_L = 667 Ω,	C_L = 5 pF			20			25	ns
t_{PLZ}					20			25	ns

NOTE 3: Load circuits and voltage waveforms are shown in Section 1.

DECEMBER 1983 – REVISED MARCH 1988

- **Package Options Include Plastic and Ceramic DIPs and Ceramic Flat Packages**
- **Dependable Texas Instruments Quality and Reliability**

description

These devices contain four independent 2-input-NOR line drivers. They perform the Boolean function $Y = \overline{A + B}$ or $Y = \overline{A} \cdot \overline{B}$. The SN54128 is designed to drive 75 ohm lines. The SN74128 is designed to drive 50 ohm lines.

The SN54128 is characterized for operation over the full military temperature range of −55°C to 125°C. The SN74128 is characterized for operation from 0°C to 70°C.

SN54128 . . . J OR W PACKAGE
SN74128 . . . N PACKAGE
(TOP VIEW)

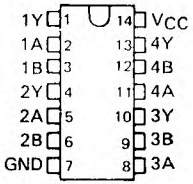

logic diagram (each driver)

logic symbol†

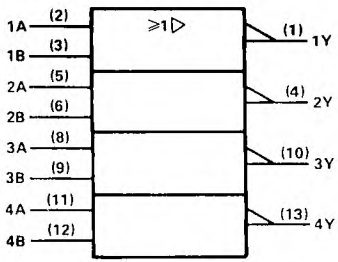

†This symbol is in accordance with ANSI/IEEE Std 91-1984 and IEC Publication 617-12.

schematic (each driver)

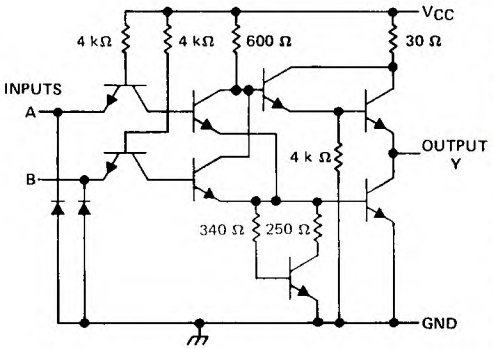

Resistor values shown are nominal.

absolute maximum ratings over operating free-air temperature range (unless otherwise noted)

Supply voltage, V_{CC} (see Note 1) . . . . . 7 V
Input voltage . . . . . 5.5 V
Operating free-air temperature range: SN54' . . . . . −55°C to 125°C
SN74' . . . . . 0°C to 70°C
Storage temperature range . . . . . −65°C to 150°C

NOTE 1: Voltage values are with respect to network ground terminal.

PRODUCTION DATA documents contain information current as of publication date. Products conform to specifications per the terms of Texas Instruments standard warranty. Production processing does not necessarily include testing of all parameters.

recommended operating conditions

		SN54128			SN74128			UNIT
		MIN	NOM	MAX	MIN	NOM	MAX	
V_{CC}	Supply voltage	4.5	5	5.5	4.75	5	5.25	V
V_{IH}	High-level input voltage	2			2			V
V_{IL}	Low-level input voltage			0.8			0.8	V
I_{OH}	High-level output current			−29			−42.4	mA
I_{OL}	Low-level output current			48			48	mA
T_A	Operating free-air temperature	−55		125	0		70	°C

electrical characteristics over recommended operating free-air temperature range (unless otherwise noted)

PARAMETER	TEST CONDITIONS †			MIN	TYP‡	MAX	UNIT
V_{IK}	V_{CC} = MIN,	I_I = −12 mA				−1.5	V
V_{OH}	V_{CC} = MIN,	V_{IL} = 0.8 V,	I_{OH} = −2.4 mA	2.4	3.4		V
	V_{CC} = MIN,	V_{IL} = 0.4 V,	I_{OH} = −13.2 mA	2.4			
	V_{CC} = MIN,	V_{IL} = 0.4 V,	I_{OH} = MAX	2			
V_{OL}	V_{CC} = MIN,	V_{IH} = 2 V,	I_{OL} = 48 mA		0.26	0.4	V
I_I	V_{CC} = MAX,	V_I = 5.5 V				1	mA
I_{IH}	V_{CC} = MAX,	V_I = 2.4 V				40	μA
I_{IL}	V_{CC} = MAX,	V_I = 0.4 V				−1.6	mA
I_{OS}§	V_{CC} = MAX			−70		−180	mA
I_{CCH}	V_{CC} = MAX				12	21	mA
I_{CCL}	V_{CC} = MAX				33	57	mA

† For conditions shown as MIN or MAX, use the appropriate value specified under recommended operating conditions.
‡ All typical values are at V_{CC} = 5 V, T_A = 25°C.
§ Not more than one output should be shorted at a time.

switching characteristics, V_{CC} = 5 V, T_A = 25°C (see note 2)

PARAMETER	FROM (INPUT)	TO (OUTPUT)	TEST CONDITIONS		MIN	TYP	MAX	UNIT
t_{PLH}	A or B	Y	R_L = 133 Ω,	C_L = 50 pF		6	9	ns
t_{PHL}						8	12	ns
t_{PLH}			R_L = 133 Ω,	C_L = 150 pF		10	15	ns
t_{PHL}						12	18	ns

NOTE 2: Load circuits and voltage waveforms are shown in Section 1.

TEXAS INSTRUMENTS
POST OFFICE BOX 655012 • DALLAS, TEXAS 75265

- Operation from Very Slow Edges
- Improved Line-Receiving Characteristics
- High Noise Immunity

description

Each circuit functions as a 2-input NAND gate, but because of the Schmitt action, it has different input threshold levels for positive (V_{T+}) and for negative going (V_{T-}) signals.

These circuits are temperature-compensated and can be triggered from the slowest of input ramps and still give clear, jitter-free output signals.

The SN54132, SN54LS132, and SN54S132 are characterized for operation over the full military temperature range of −55°C to 125°C. The SN74132, SN74LS132, and SN74S132 are characterized for operation from 0°C to 70°C.

logic diagram (positive logic)

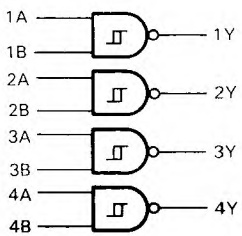

SN54132, SN54LS132, SN54S132 . . . J OR W PACKAGE
SN74132 . . . N PACKAGE
SN74LS132, SN74S132 . . . D OR N PACKAGE
(TOP VIEW)

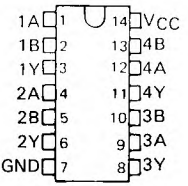

SN54LS132, SN54S132 . . . FK PACKAGE
(TOP VIEW)

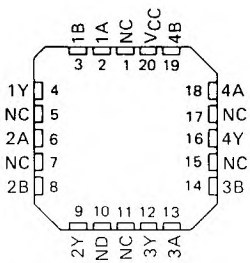

NC No internal connection

logic symbol†

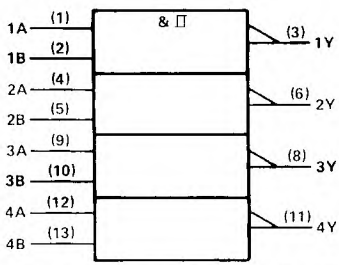

positive logic. $Y = \overline{AB}$ or $Y = \overline{A} + \overline{B}$

†This symbol is in accordance with ANSI/IEEE Std 91-1984 and IEC Publication 617-12.
Pin numbers shown are for D, J, N, and W packages.

PRODUCTION DATA documents contain information current as of publication date. Products conform to specifications per the terms of Texas Instruments standard warranty. Production processing does not necessarily include testing of all parameters.

schematics

'132 CIRCUITS

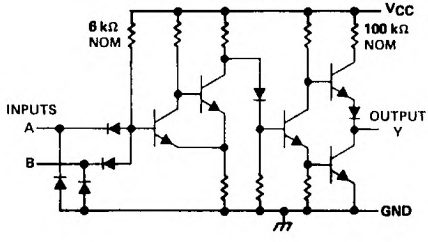

'LS132 CIRCUITS

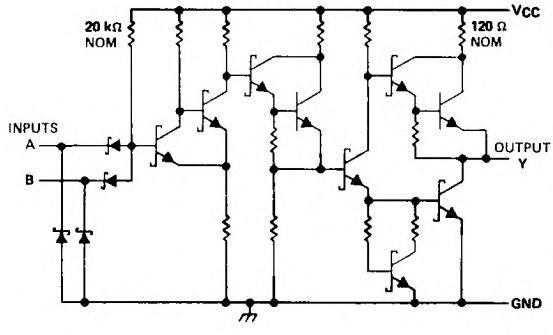

'S132 CIRCUITS

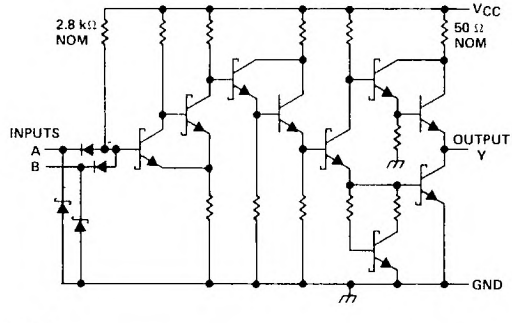

Resistor values shown are nominal.

absolute maximum ratings over operating free-air temperature range (unless otherwise noted)

Supply voltage, V_{CC} (see Note 1) . . . . . 7 V
Input voltage: '132, 'S132 . . . . . 5.5 V
'LS132 . . . . . 7 V
Operating free-air temperature: SN54' . . . . . −55°C to 125°C
SN74' . . . . . 0°C to 70°C
Storage temperature range . . . . . −65°C to 150°C

NOTE 1: Voltages values are with respect to network ground terminal.

recommended operating conditions

		SN54132			SN74132			UNIT
		MIN	NOM	MAX	MIN	NOM	MAX	
V_{CC}	Supply voltage	4.5	5	5.5	4.75	5	5.25	V
I_{OH}	High-level output current			−0.8			−0.8	mA
I_{OL}	Low-level output current			16			16	mA
T_A	Operating free-air temperature	−55		125	0		70	°C

electrical characteristics over recommended operating free-air temperature range (unless otherwise noted)

PARAMETER	TEST CONDITIONS†			MIN	TYP‡	MAX	UNIT
V_{T+}	V_{CC} = 5 V			1.5	1.7	2	V
V_{T-}	V_{CC} = 5 V			0.6	0.9	1.1	V
V_{hys} ($V_{T+} - V_{T-}$)	V_{CC} = 5 V			0.4	0.8		V
V_{IK}	V_{CC} = MIN,	I_I = −12 mA				−1.5	V
V_{OH}	V_{CC} = MIN,	V_I = 0.6 V,	I_{OH} = −0.8 mA	2.4	3.4		V
V_{OL}	V_{CC} = MIN,	V_I = 2 V,	I_{OL} = 16 mA		0.2	0.4	V
I_{T+}	V_{CC} = 5 V,	V_I = V_{T+}			−0.43		mA
I_{T-}	V_{CC} = 5 V,	V_I = V_{T-}			−0.56		mA
I_I	V_{CC} = MAX,	V_I = 5.5 V				1	mA
I_{IH}	V_{CC} = MAX,	V_I = 2.4 V				40	μA
I_{IL}	V_{CC} = MAX,	V_{IL} = 0.4 V			−0.8	−1.2	mA
I_{OS}§	V_{CC} = MAX			−18		−55	mA
I_{CCH}	V_{CC} = MAX				15	24	mA
I_{CCL}	V_{CC} = MAX				26	40	mA

† For conditions shown as MIN or MAX, use the appropriate value specified under recommended operating conditions.
‡ All typical values are at V_{CC} = 5 V, T_A = 25°C.
§ Not more than one output should be shorted at a time.

switching characteristics, V_{CC} = 5 V, T_A = 25°C (see figure 1)

PARAMETER	FROM (INPUT)	TO (OUTPUT)	TEST CONDITIONS	MIN	TYP	MAX	UNIT
t_{PLH}	Any	Y	R_L = 400 Ω, C_L = 15 pF		15	22	ns
t_{PHL}					15	22	ns

recommended operating conditions

		SN54LS132			SN74LS132			UNIT
		MIN	NOM	MAX	MIN	NOM	MAX	
V_{CC}	Supply voltage	4.5	5	5.5	4.75	5	5.25	V
I_{OH}	High-level output current			−0.4			−0.4	mA
I_{OL}	Low-level output current			4			8	mA
T_A	Operating free-air temperature	−55		125	0		70	°C

electrical characteristics over recommended operating free-air temperature range (unless otherwise noted)

PARAMETER	TEST CONDITIONS†			SN54LS132			SN74LS132			UNIT
				MIN	TYP‡	MAX	MIN	TYP‡	MAX	
V_{T+}	V_{CC} = 5 V			1.4	1.6	1.9	1.4	1.6	1.9	V
V_{T-}	V_{CC} = 5 V			0.5	0.8	1	0.5	0.8	1	V
V_{hys} ($V_{T+} - V_{T-}$)	V_{CC} = 5 V			0.4	0.8		0.4	0.8		V
V_{IK}	V_{CC} = MIN,	I_I = −18 mA				−1.5			−1.5	V
V_{OH}	V_{CC} = MIN,	V_I = 0.5 V,	I_{OH} = −0.4 mA	2.5	3.4		2.7	3.4		V
V_{OL}	V_{CC} = MIN,	V_I = 1.9 V	I_{OL} = 4 mA		0.25	0.4		0.25	0.4	V
			I_{OL} = 8 mA					0.35	0.5	
I_{T+}	V_{CC} = 5 V,	$V_I = V_{T+}$			−0.14			−0.14		mA
I_{T-}	V_{CC} = 5 V,	$V_I = V_{T-}$			−0.18			−0.18		mA
I_I	V_{CC} = MAX,	V_I = 7 V				0.1			0.1	mA
I_{IH}	V_{CC} = MAX,	V_I = 2.7 V				20			20	μA
I_{IL}	V_{CC} = MAX,	V_{IL} = 0.4 V				−0.4			−0.4	mA
I_{OS} §	V_{CC} = MAX			−20		−100	−20		−100	mA
I_{CCH}	V_{CC} = MAX				5.9	11		5.9	11	mA
I_{CCL}	V_{CC} = MAX				8.2	14		8.2	14	mA

† For conditions shown as MIN or MAX, use the appropriate value specified under recommended operating conditions.
‡ All typical values are at V_{CC} = 5 V, T_A = 25°C.
§ Not more than one output should be shorted at a time, and duration of the short-circuit should not exceed one second

switching characteristics, V_{CC} = 5 V, T_A = 25°C (see figure 1)

PARAMETER	FROM (INPUT)	TO (OUTPUT)	TEST CONDITIONS	MIN	TYP	MAX	UNIT
t_{PLH}	Any	Y	R_L = 2 kΩ, C_L = 15 pF		15	22	ns
t_{PHL}					15	22	ns

TEXAS INSTRUMENTS
POST OFFICE BOX 655012 • DALLAS, TEXAS 75265

recommended operating conditions

	SN54S132			SN74S132			UNIT
	MIN	NOM	MAX	MIN	NOM	MAX	
V_{CC} Supply voltage	4.5	5	5.5	4.75	5	5.25	V
I_{OH} High-level output current			−1			−1	mA
I_{OL} Low-level output current			20			20	mA
T_A Operating free-air temperature	−55		125	0		70	°C

electrical characteristics over recommended operating free-air temperature range (unless otherwise noted)

PARAMETER	TEST CONDITIONS†			SN54S132			SN74S132			UNIT
				MIN	TYP‡	MAX	MIN	TYP‡	MAX	
V_{T+}	V_{CC} = 5 V			1.6	1.77	1.9	1.6	1.77	1.9	V
V_{T-}	V_{CC} = 5 V			1.1	1.22	1.4	1.1	1.22	1.4	V
V_{hys} ($V_{T+} - V_{T-}$)	V_{CC} = 5 V			0.2	0.55		0.2	0.55		V
V_{IK}	V_{CC} = MIN,	I_I = −18 mA				−1.2			−1.2	V
V_{OH}	V_{CC} = MIN,	V_I = 1.1 V,	I_{OH} = −1 mA	2.5	3.4		2.7	3.4		V
V_{OL}	V_{CC} = MIN,	V_I = 1.9 V,	I_{OL} = 20 mA			0.5			0.5	V
I_{T+}	V_{CC} = 5 V,	$V_I = V_{T+}$			−0.9			−0.9		mA
I_{T-}	V_{CC} = 5 V,	$V_I = V_{T-}$			−1.1			−1.1		mA
I_I	V_{CC} = MAX,	V_I = 5.5 V				1			1	mA
I_{IH}	V_{CC} = MAX,	V_I = 2.7 V				50			50	μA
I_{IL}	V_{CC} = MAX,	V_{IL} = 0.5 V				−2			−2	mA
I_{OS}§	V_{CC} = MAX			−40		−100	−40		−100	mA
I_{CCH}	V_{CC} = MAX				28	44		28	44	mA
I_{CCL}	V_{CC} = MAX				44	68		44	68	mA

† For conditions shown as MIN or MAX, use the appropriate value specified under recommended operating conditions.
‡ All typical values are at V_{CC} = 5 V, T_A = 25°C.
§ Not more than one output should be shorted at a time, and duration of the short-circuit should not exceed one second.

switching characteristics, V_{CC} = 5 V, T_A = 25°C (see figure 1)

PARAMETER	FROM (INPUT)	TO (OUTPUT)	TEST CONDITIONS	MIN	TYP	MAX	UNIT
t_{PLH}	A or B	Y	R_L = 280 Ω, C_L = 15 pF		7	10.5	ns
t_{PHL}					8.5	13	ns

PARAMETER MEASUREMENT INFORMATION

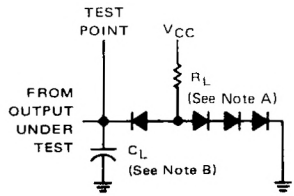

LOAD CIRCUIT

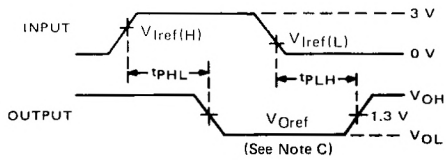

VOLTAGE WAVEFORMS

NOTES: A. All diodes are 1N3064 or equivalent.
B. C_L includes probe and jig capacitance.
C. Generator characteristics and reference voltages are:

	Generator Characteristics				Reference Voltages		
	Z_{out}	PRR	t_r	t_f	$V_{I\ ref(H)}$	$V_{I\ ref(L)}$	$V_{O\ ref}$
SN54'/SN74'	50	1 MHz	10 ns	10 ns	1.7 V	0.9 V	1.5 V
SN54LS'/SN74LS'	50	1 MHz	15 ns	6 ns	1.6 V	0.8 V	1.3 V
[illegible]	50	1 [illegible]	2.5 ns	2.5 ns	1.8 V	1.2 V	1.5 V

FIGURE 1

TEXAS INSTRUMENTS
POST OFFICE BOX 655012 • DALLAS, TEXAS 75265

TYPICAL CHARACTERISTICS OF '132 CIRCUITS

POSITIVE-GOING THRESHOLD VOLTAGE
vs
FREE-AIR TEMPERATURE

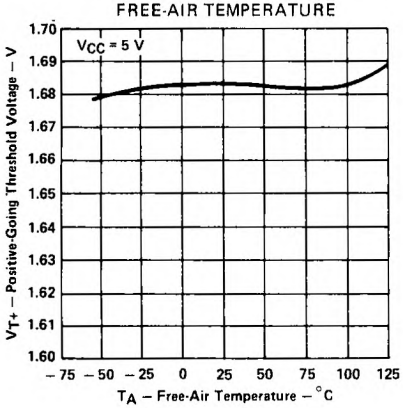

NEGATIVE-GOING THRESHOLD VOLTAGE
vs
FREE-AIR TEMPERATURE

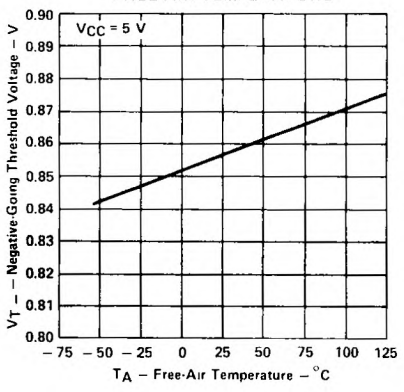

HYSTERESIS
vs
FREE-AIR TEMPERATURE

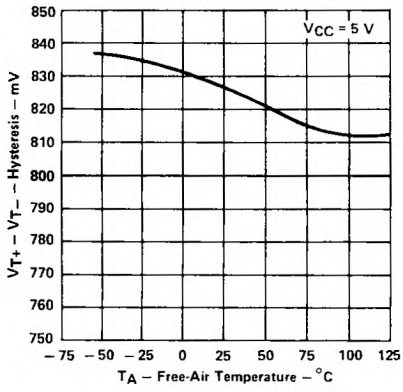

DISTRIBUTION OF UNITS
FOR HYSTERESIS

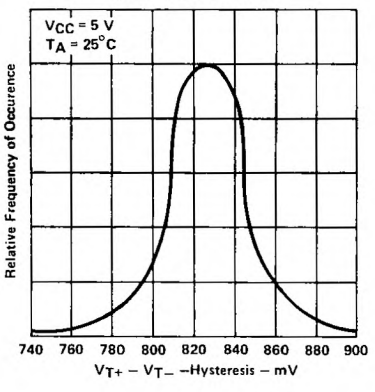

† Data for temperatures below 0°C and 70°C and supply below 4.75 V and above 5.25 V are applicable for SN54132 only.

TYPICAL CHARACTERISTICS OF '132 CIRCUITS

THRESHOLD VOLTAGES
vs
SUPPLY VOLTAGE

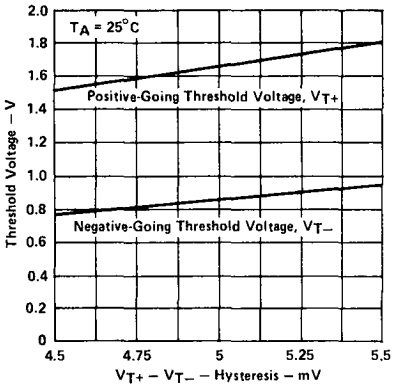

HYSTERESIS
vs
SUPPLY VOLTAGE

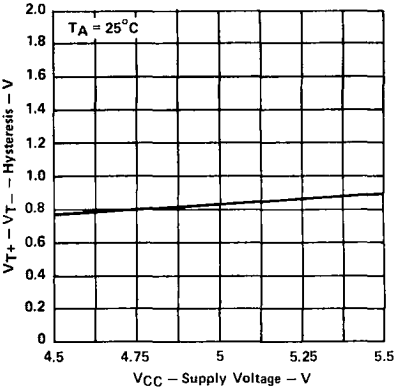

OUTPUT VOLTAGE
vs
INPUT VOLTAGE

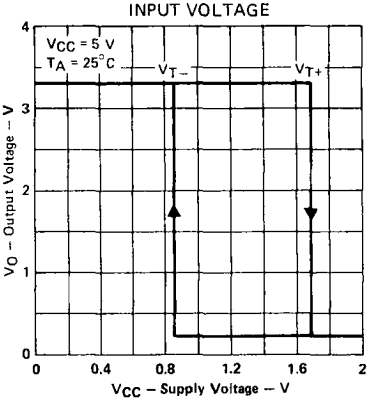

† Data for temperatures below 0°C and 70°C and supply below 4.75 V and above 5.25 V are applicable for SN54132 only.

TYPICAL CHARACTERISTICS OF 'LS132 CIRCUITS

POSITIVE-GOING THRESHOLD VOLTAGE
vs
FREE-AIR TEMPERATURE

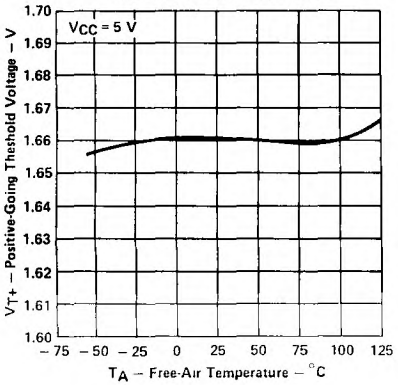

NEGATIVE-GOING THRESHOLD VOLTAGE
vs
FREE-AIR TEMPERATURE

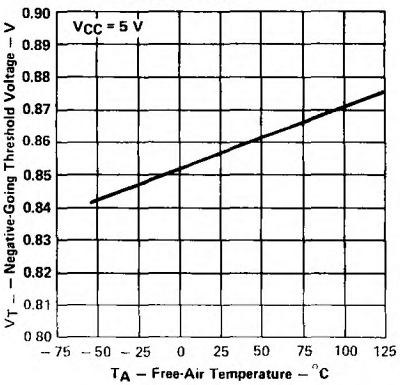

HYSTERESIS
vs
FREE-AIR TEMPERATURE

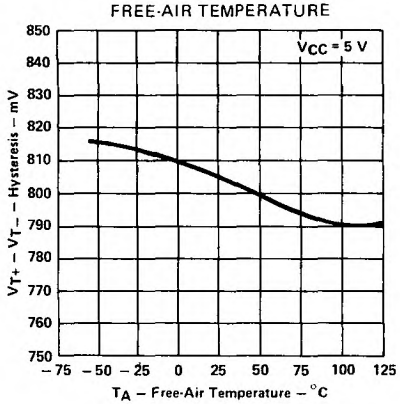

DISTRIBUTION OF UNITS
FOR HYSTERESIS

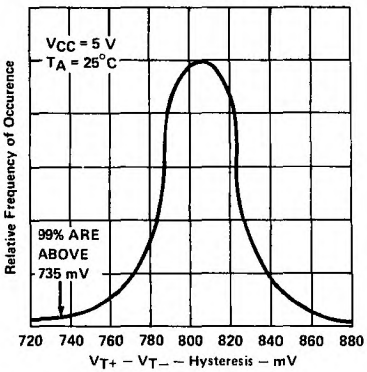

† Data for temperatures below 0°C and above 70°C and supply voltages below 4.75 V and above 5.25 V are applicable for SN54LS132 only.

TYPICAL CHARACTERISTICS OF 'LS132 CIRCUITS

THRESHOLD VOLTAGES AND HYSTERESIS
vs
SUPPLY VOLTAGE

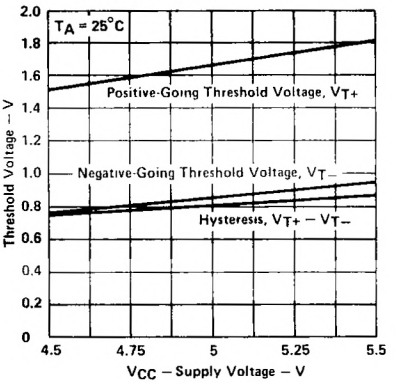

OUTPUT VOLTAGE
vs
INPUT VOLTAGE

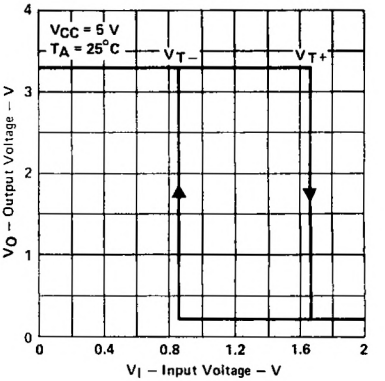

2 TTL Devices

† Data for temperatures below 0°C and above 70°C and supply voltages below 4.75 V and above 5.25 V are applicable for SN54LS132 only.

TEXAS INSTRUMENTS
POST OFFICE BOX 655012 • DALLAS, TEXAS 75265

TYPICAL APPLICATION DATA

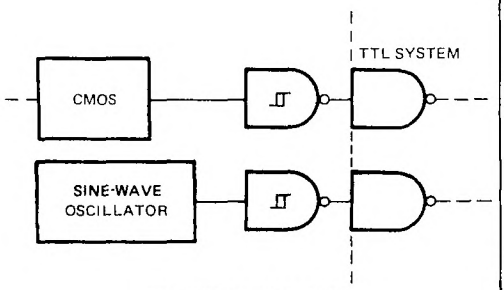

TTL SYSTEM INTERFACE
FOR SLOW INPUT WAVEFORMS

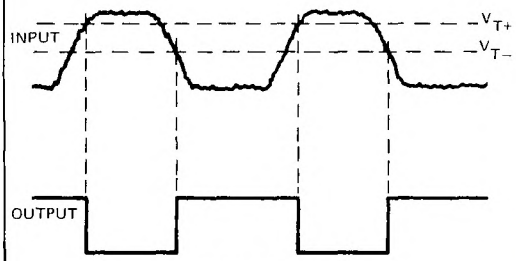

PULSE SHAPER

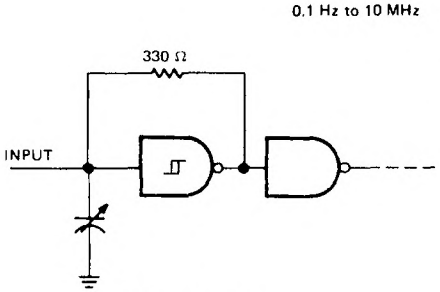

MULTIVIBRATOR

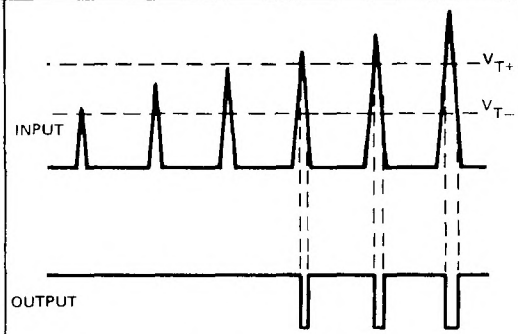

THRESHOLD DETECTOR

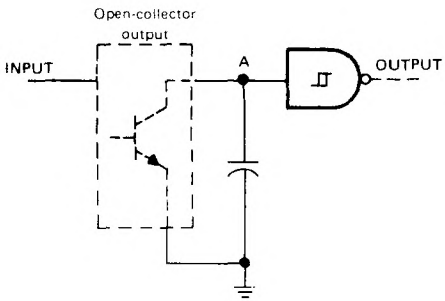

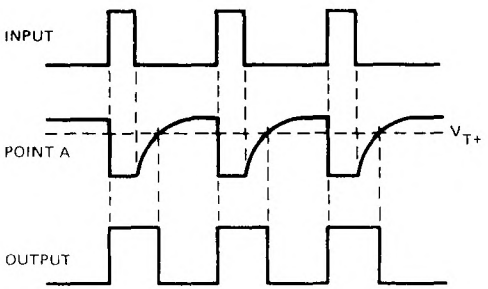

PULSE STRETCHER

DECEMBER 1983 – REVISED MARCH 1988

- **Package Options Include Plastic "Small Outline" Packages, Ceramic Chip Carriers and Flat Packages, and Plastic and Ceramic DIPs**
- **Dependable Texas Instruments Quality and Reliability**

description

These devices contain a single 13-input NAND gate.

The SN54133 is characterized for operation over the full military temperature range of −55°C to 125°C. The SN74133 is characterized for operation from 0°C to 70°C.

FUNCTION TABLE

INPUTS A THRU M	OUTPUT Y
All inputs H	L
One or more inputs L	H

logic diagram

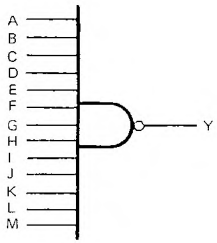

positive logic

$$Y = \overline{A \cdot B \cdot C \cdot D \cdot E \cdot F \cdot G \cdot H \cdot I \cdot J \cdot K \cdot L \cdot M} \quad \text{or}$$

$$Y = \overline{A} + \overline{B} + \overline{C} + \overline{D} + \overline{E} + \overline{F} + \overline{G} + \overline{H} + \overline{I} + \overline{J} + \overline{K} + \overline{L} + \overline{M}$$

SN54S133 . . . J OR W PACKAGE
SN74S133 . . . D OR N PACKAGE
(TOP VIEW)

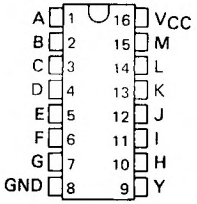

SN54S133 . . . FK PACKAGE
(TOP VIEW)

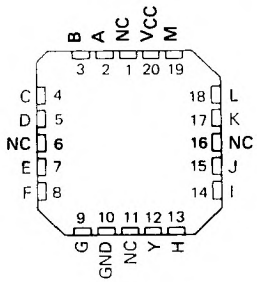

NC No internal connection

logic symbol†

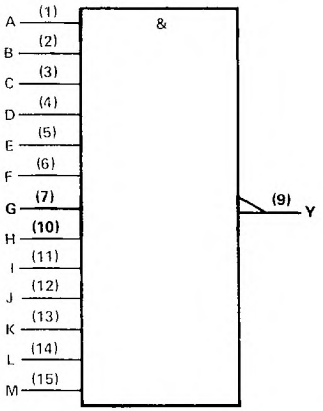

†This symbol is in accordance with ANSI/IEEE Std 91-1984 and IEC Publication 617-12.
Pin numbers shown are for D, J, N, and W packages.

schematic

'S133

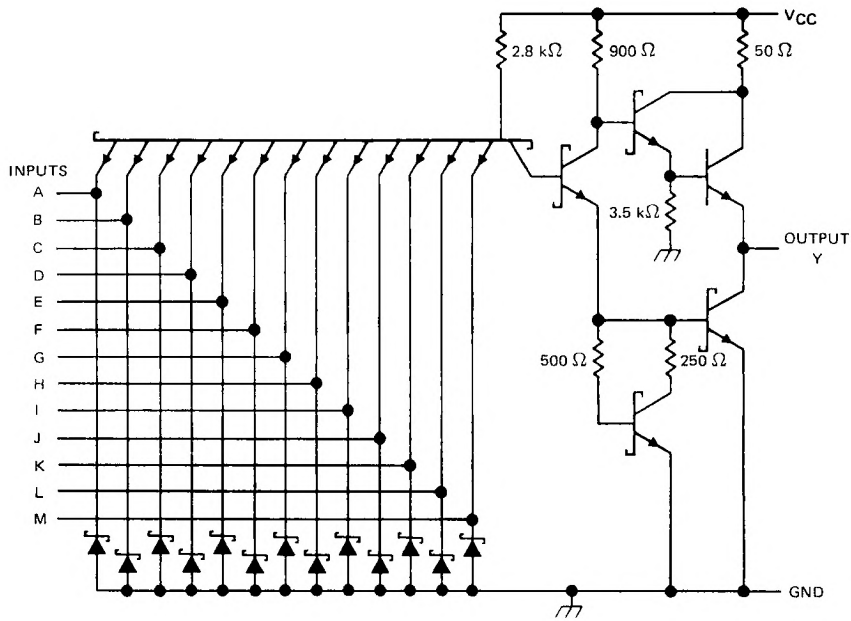

Resistor values shown are nominal.

absolute maximum ratings over operating free-air temperature range (unless otherwise noted)

Supply voltage, V_{CC} (see Note 1) . . . . . 7 V
Input voltage . . . . . 5.5 V
Operating free-air temperature range: SN54' . . . . . −55°C to 125°C
SN74' . . . . . 0°C to 70°C
Storage temperature range . . . . . −65°C to 150°C

NOTE 1: Voltage values are with respect to network ground terminal

TEXAS INSTRUMENTS
POST OFFICE BOX 655012 • DALLAS, TEXAS 75265

recommended operating conditions

	SN54S133			SN74S133			UNIT
	MIN	NOM	MAX	MIN	NOM	MAX	
V_{CC} Supply voltage	4.5	5	5.5	4.75	5	5.25	V
V_{IH} High-level input voltage	2			2			V
V_{IL} Low-level input voltage			0.8			0.8	V
I_{OH} High-level output current			−1			−1	mA
I_{OL} Low-level output current			20			20	mA
T_A Operating free-air temperature	−55		125	0		70	°C

electrical characteristics over recommended operating free-air temperature range (unless otherwise noted)

PARAMETER	TEST CONDITIONS †	SN54S133			SN74S133			UNIT
		MIN	TYP‡	MAX	MIN	TYP‡	MAX	
V_{IK}	V_{CC} = MIN, I_I = −18 mA			−1.2			−1.2	V
V_{OH}	V_{CC} = MIN, V_{IL} = 0.8 V, I_{OH} = −1 mA	2.5	3.4		2.7	3.4		V
V_{OL}	V_{CC} = MIN, V_{IH} = 2 V, I_{OL} = 20 mA			0.5			0.5	V
I_I	V_{CC} = MAX, V_I = 5.5 V			1			1	mA
I_{IH}	V_{CC} = MAX, V_I = 2.7 V			50			50	μA
I_{IL}	V_{CC} = MAX, V_I = 0.5 V			−2			−2	mA
I_{OS}§	V_{CC} = MAX	−40		−100	−40		−100	mA
I_{CCH}	V_{CC} = MAX, V_I = 0 V		3	5		3	5	mA
I_{CCL}	V_{CC} = MAX, V_I = 4.5 V		5.5	10		5.5	10	mA

† For conditions shown as MIN or MAX, use the appropriate value specified under recommended operating conditions.
‡ All typical values are at V_{CC} = 5 V, T_A = 25°C.
§ Not more than one output should be shorted at a time, and the duration of the short-circuit should not exceed one second.

switching characteristics, V_{CC} = 5 V, T_A = 25°C (see note 2)

PARAMETER	FROM (INPUT)	TO (OUTPUT)	TEST CONDITIONS	MIN	TYP	MAX	UNIT
t_{PLH}	Any	Y	R_L = 280 Ω, C_L = 15 pF		4	6	ns
t_{PHL}					4.5	7	ns
t_{PLH}			R_L = 280 Ω, C_L = 50 pF		5.5		ns
t_{PHL}					6.5		ns

NOTE 2: Load circuits and voltage waveforms are shown in Section 1

DECEMBER 1983 – REVISED MARCH 1988

- **Package Options Include Plastic "Small Outline" Packages, Ceramic Chip Carriers and Flat Packages, and Plastic and Ceramic DIPs**
- **Dependable Texas Instruments Quality and Reliability**

description

The 'S134 feature three-state outputs that, when enabled, have the low impedance characteristics of a TTL output with additional drive capability at high logic levels to permit driving heavily loaded lines without external pull-up resistors. When disabled, both output transistors are turned off presenting a high-impedance state to the bus so the output will act neither as a significant load nor as a driver. The 'S134 outputs are diabled when G is high.

logic diagram

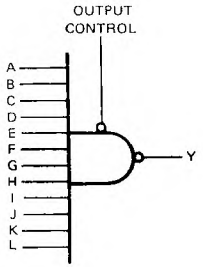

positive logic

$Y = \overline{A \cdot B \cdot C \cdot D \cdot E \cdot F \cdot G \cdot H \cdot I \cdot J \cdot K \cdot L}$ or

$Y = \overline{A} + \overline{B} + \overline{C} + \overline{D} + \overline{E} + \overline{F} + \overline{G} + \overline{H} + \overline{I} + \overline{J} + \overline{K} + \overline{L}$

Output is off (disabled) when output control is high.

SN54S134 . . . J OR W PACKAGE
SN74S134 . . . D OR N PACKAGE
(TOP VIEW)

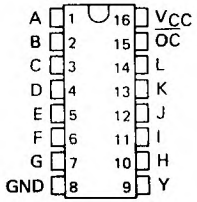

SN54S134 . . . FK PACKAGE
(TOP VIEW)

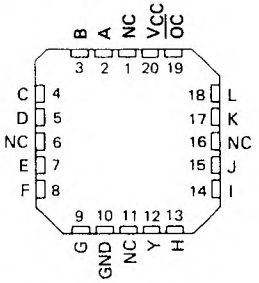

NC - No internal connection

logic symbol†

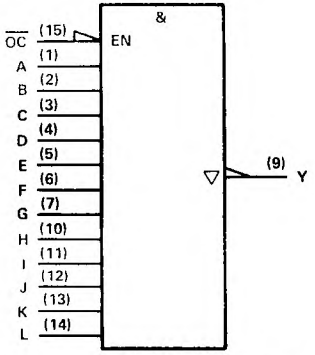

†This symbol is in accordance with ANSI/IEEE Std 91-1984 and IEC Publication 617-12.
Pin numbers shown are for D, J, N, and W packages.

PRODUCTION DATA documents contain information current as of publication date. Products conform to specifications per the terms of Texas Instruments standard warranty. Production processing does not necessarily include testing of all parameters.

schematic

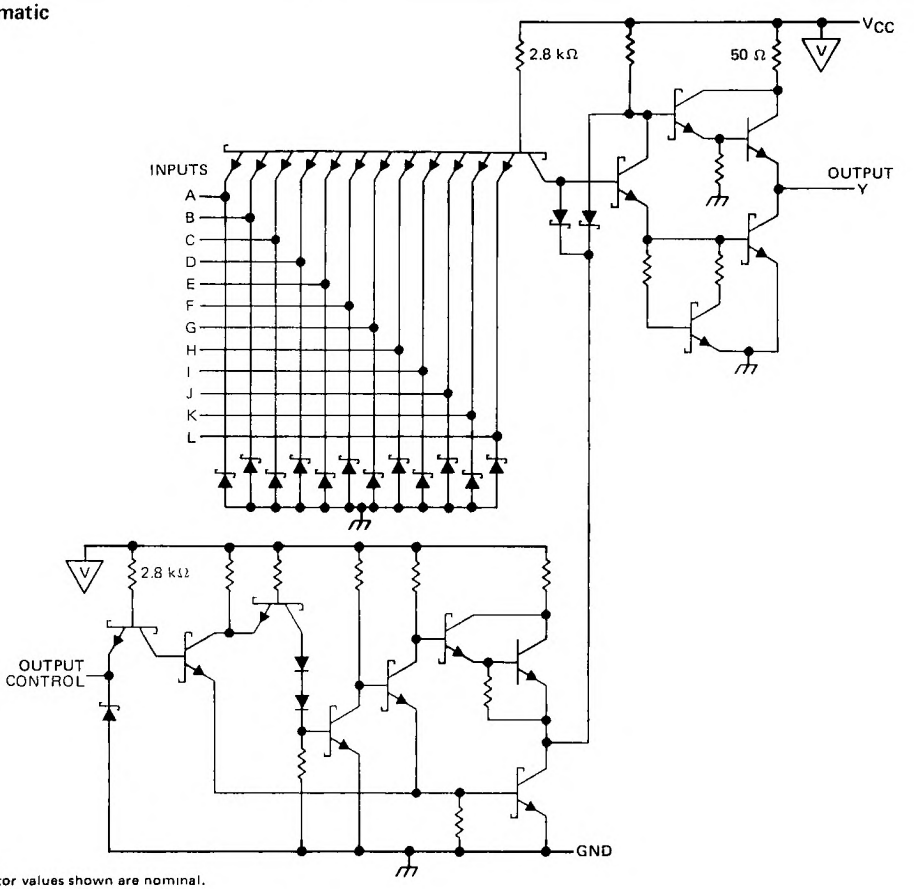

Resistor values shown are nominal.

absolute maximum ratings over operating free-air temperature range (unless otherwise noted)

Supply voltage, V_{CC} (see Note 1) . . . . . 7 V
Input voltage . . . . . 5.5 V
Voltage applied to a disabled 3-state output . . . . . 5.5 V
Operating free-air temperature range: SN54' . . . . . −55°C to 125°C
SN74' . . . . . 0°C to 70°C
Storage temperature range . . . . . −65°C to 150°C

NOTE 1: Voltage values are with respect to network ground terminal.

recommended operating conditions

		SN54S134			SN74S134			UNIT
		MIN	NOM	MAX	MIN	NOM	MAX	
V_{CC}	Supply voltage	4.5	5	5.5	4.75	5	5.25	V
V_{IH}	High-level input voltage	2			2			V
V_{IL}	Low-level input voltage			0.8			0.8	V
I_{OH}	High-level output current			−2			−6.5	mA
I_{OL}	Low-level output current			20			20	mA
T_A	Operating free-air temperature	−55		125	0		70	°C

electrical characteristics over recommended operating free-air temperature range (unless otherwise noted)

PARAMETER	TEST CONDITIONS†		SN54S134			SN74S134			UNIT
			MIN	TYP‡	MAX	MIN	TYP‡	MAX	
V_{IK}	V_{CC} = MIN, I_I = −18 mA				−1.2			−1.2	V
V_{OH}	V_{CC} = MIN, V_{IH} = 2 V, V_{IL} = 0.8 V	I_{OH} = −2 mA	2.4	3.4					V
		I_{OH} = −6.5 mA				2.4	3.2		
V_{OL}	V_{CC} = MIN, V_{IH} = 2 V, V_{IL} = 0.8 V, I_{OL} = 20 mA				0.5			0.5	V
I_{OZ}	V_{CC} = MAX, V_{IH} = 2 V, V_{IL} = 0.8 V	V_O = 2.4 V			50			50	μA
		V_O = 0.5 V			−50			−50	
I_I	V_{CC} = MAX, V_I = 5.5 V				1			1	mA
I_{IH}	V_{CC} = MAX, V_I = 2.7 V				50			50	μA
I_{IL}	V_{CC} = MAX, V_I = 0.5 V				−2			−2	mA
I_{OS}§	V_{CC} = MAX		−40		−100	−40		−100	mA
I_{CC}	V_{CC} MAX	Outputs high		7	13		7	13	mA
		Outputs low		9	16		9	16	
		Outputs disabled		14	25		14	25	

† For conditions shown as MIN or MAX, use the appropriate value specified under recommended operating conditions.
‡ All typical values are at V_{CC} = 5 V, T_A = 25°C.
§ Not more than one output should be shorted at a time, and duration of the short circuit should not exceed one second.

switching characteristics, V_{CC} = 5 V, T_A = 25°C (see note 2)

PARAMETER	TEST CONDITIONS	SN54S134			SN74S134			UNIT
		MIN	TYP	MAX	MIN	TYP	MAX	
t_{PLH}	R_L = 280 Ω, C_L = 15 pF		4	6		4	6	ns
t_{PLH}	R_L = 280 Ω, C_L = 50 pF		5.5			5.5		ns
t_{PHL}	R_L = 280 Ω, C_L = 15 pF		5	7.5		5	7.5	ns
t_{PHL}	R_L = 280 Ω, C_L = 50 pF		7			7		ns
t_{PZH}	R_L = 280 Ω, C_L = 50 pF		13	19.5		13	19.5	ns
t_{PZL}			14	21		14	21	ns
t_{PHZ}	R_L = 280 Ω, C_L = 5 pF		5.5	8.5		5.5	8.5	ns
t_{PLZ}			9	14		9	14	ns

NOTE 2: Load circuits and voltage waveforms are shown in Section 1.

DECEMBER 1972—REVISED MARCH 1988

- Fully Compatible with Most TTL and TTL MSI Circuits
- Fully Schottky Clamping Reduces Delay Times . . . 8 ns Typical
- Can Operate as Exclusive-OR Gate (C Input Low) or as Exclusive-NOR Gate (C Input High)

FUNCTION TABLE

INPUTS			OUTPUT
A	B	C	Y
L	L	L	L
L	H	L	H
H	L	L	H
H	H	L	L
L	L	H	H
L	H	H	L
H	L	H	L
H	H	H	H

H = high level, L = low level

SN54S135 . . . J OR W PACKAGE
SN74S135 . . . D OR N PACKAGE
(TOP VIEW)

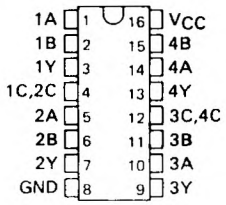

SN54S135 . . . FK PACKAGE
(TOP VIEW)

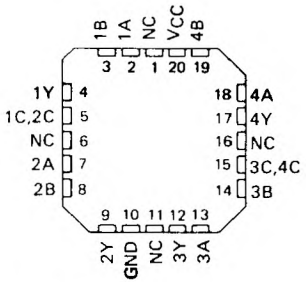

NC - No internal connection

logic diagram (one half)

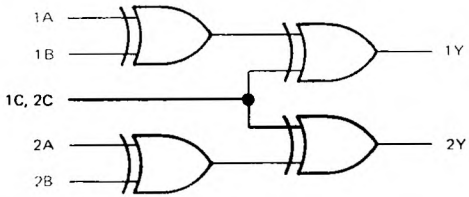

positive logic

$Y = A \oplus B \oplus C = A\bar{B}\bar{C} + \bar{A}B\bar{C} + \bar{A}\bar{B}C + ABC$

logic symbol†

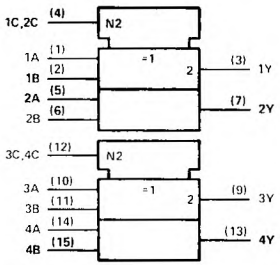

†This symbol is in accordance with ANSI/IEEE Std. 91-1984 and IEC Publication 617-12.
Pin numbers are for D, J, N, and W packages.

schematics of inputs and outputs

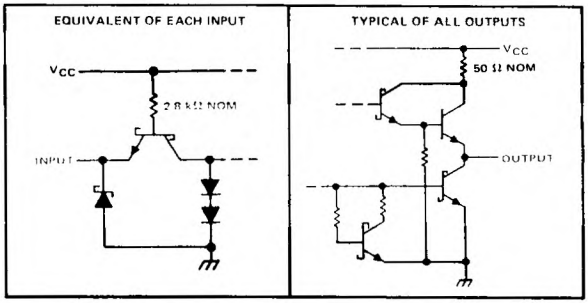

Resistor values shown are nominal.

PRODUCTION DATA documents contain information current as of publication date. Products conform to specifications per the terms of Texas Instruments standard warranty. Production processing does not necessarily include testing of all parameters.

absolute maximum ratings over operating free-air temperature range (unless otherwise noted)

Supply voltage, V_{CC} (see Note 1) . . . . . 7 V
Input voltage . . . . . 5.5 V
Operating free-air temperature range: SN54S135 . . . . . −55°C to 125°C
SN74S135 . . . . . 0°C to 70°C
Storage temperature range . . . . . −65°C to 150°C

NOTE 1: Voltage values are with respect to network ground terminal.

recommended operating conditions

	SN54S135			SN74S135			UNIT
	MIN	NOM	MAX	MIN	NOM	MAX	
Supply voltage, V_{CC}	4.5	5	5.5	4.75	5	5.25	V
High-level output current, I_{OH}			−1			−1	mA
Low-level output current, I_{OL}			20			20	mA
Operating free-air temperature, T_A	−55		125	0		70	°C

electrical characteristics over recommended operating free-air temperature range (unless otherwise noted)

PARAMETER		TEST CONDITIONS†	MIN	TYP‡	MAX	UNIT
V_{IH}	High-level input voltage		2			V
V_{IL}	Low-level input voltage				0.8	V
V_{IK}	Input clamp voltage	V_{CC} = MIN, I_I = −18 mA			−1.2	V
V_{OH}	High-level output voltage	V_{CC} = MIN, V_{IH} = 2 V, V_{IL} = 0.8 V, I_{OH} = −1 mA	2.5	3.4		V
			2.7	3.4		
V_{OL}	Low-level output voltage	V_{CC} = MIN, V_{IH} = 2 V, V_{IL} = 0.8 V, I_{OL} = 20 mA			0.5	V
I_I	Input current at maximum input voltage	V_{CC} = MAX, V_I = 5.5 V			1	mA
I_{IH}	High-level input current	V_{CC} = MAX, V_I = 2.7 V			50	μA
I_{IL}	Low-level input current	V_{CC} = MAX, V_I = 0.5 V			−2	mA
I_{OS}	Short-circuit output current§	V_{CC} = MAX	−40		−100	mA
I_{CC}	Supply current	V_{CC} = MAX, See Note 2		65	99	mA

†For conditions shown as MIN or MAX, use the appropriate value specified under recommended operating conditions for the applicable type.
‡All typical values are at V_{CC} = 5 V, T_A = 25°C.
§Not more than one output should be shorted at a time and duration of the short circuit should not exceed one second.
NOTE 2: I_{CC} is measured with the inputs grounded and the outputs open.

switching characteristics, V_{CC} = 5 V, T_A = 25°C

PARAMETER	FROM (INPUT)	TEST CONDITIONS		MIN	TYP	MAX	UNIT
t_{PLH}	A or B	B or A = L, C = L	C_L = 15 pF, R_L = 280 Ω, See Note 3		8.5	13	ns
t_{PHL}					11	15	
t_{PLH}	A or B	B or A = H, C = L			8	12	ns
t_{PHL}					9	13.5	
t_{PLH}	A or B	B or A = L, C = H			10	15	ns
t_{PHL}					6.5	10	
t_{PLH}	A or B	B or A = H, C = H			8.5	12	ns
t_{PHL}					7	13	
t_{PLH}	C	A = B			8	12	ns
t_{PHL}					9.5	14.5	
t_{PLH}	C	A ≠ B			7.5	11.5	ns
t_{PHL}					8	12	

NOTE 3: Load circuits and voltage waveforms are shown in Section 1.

TEXAS INSTRUMENTS
POST OFFICE BOX 655012 • DALLAS, TEXAS 75265

FUNCTION TABLE

INPUTS		OUTPUT
A	B	Y
L	L	L
L	H	H
H	L	H
H	H	L

H = high level, L = low level

SN54136, SN54LS136 . . . J OR W PACKAGE
SN74136 . . . N PACKAGE
SN74LS136 . . . D OR N PACKAGE
(TOP VIEW)

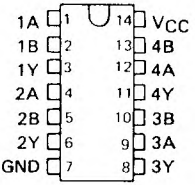

SN54LS136 . . . FK PACKAGE
(TOP VIEW)

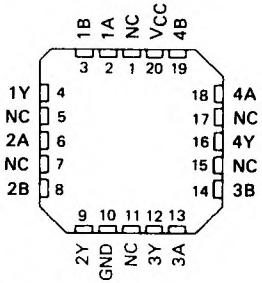

NC – No internal connection

logic symbol†

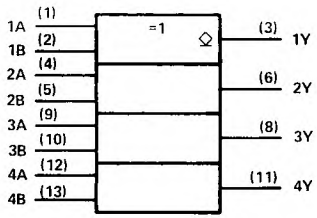

†This symbol is in accordance with ANSI/IEEE Std 91-1984 and IEC Publication 617-12.
Pin numbers shown are for D, J, N, and W packages.

logic diagram (each gate)

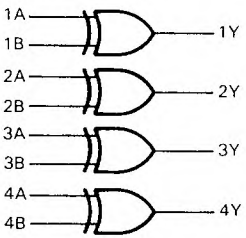

positive logic

$$Y = A \oplus B = \overline{A} \cdot B + A \cdot \overline{B}$$

schematics of inputs and outputs

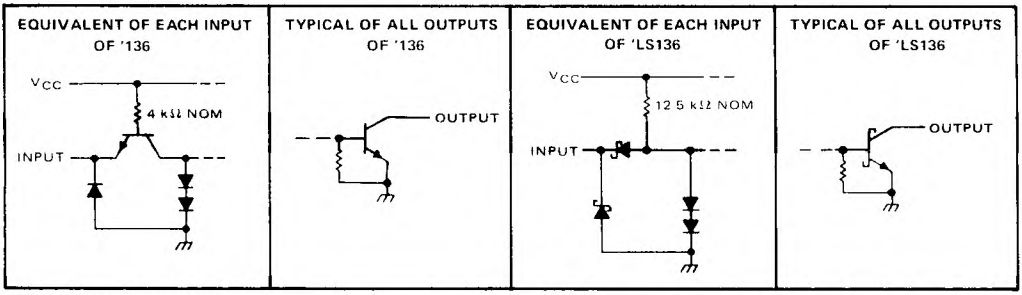

Resistor values shown are nominal.

PRODUCTION DATA documents contain information current as of publication date. Products conform to specifications per the terms of Texas Instruments standard warranty. Production processing does not necessarily include testing of all parameters.

absolute maximum ratings over operating free-air temperature range (unless otherwise noted)

Supply voltage, V_{CC} (see Note 1) . . . . . 7 V
Input voltage . . . . . 5.5 V
Operating free-air temperature range: SN54136 . . . . . −55°C to 125°C
SN74136 . . . . . 0°C to 70°C
Storage temperature range . . . . . −65°C to 150°C

NOTE 1: Voltage values are with respect to network ground terminal.

recommended operating conditions

	SN54136			SN74136			UNIT
	MIN	NOM	MAX	MIN	NOM	MAX	
Supply voltage, V_{CC}	4.5	5	5.5	4.75	5	5.25	V
High-level input voltage, V_{IH}	2			2			V
Low-level input voltage, V_{IL}			0.8			0.8	V
High-level output voltage, V_{OH}			5.5			5.5	V
Low-level output current, I_{OL}			16			16	mA
Operating free-air temperature, T_A	−55		125	0		70	°C

electrical characteristics over recommended operating free-air temperature range (unless otherwise noted)

PARAMETER	TEST CONDITIONS†	SN54136			SN74136			UNIT
		MIN	TYP‡	MAX	MIN	TYP‡	MAX	
V_{IK}	V_{CC} = MIN, I_I = −8 mA			−1.5			−1.5	V
I_{OH}	V_{CC} = MIN, V_{IH} = 2 V, V_{IL} = 0.8 V, V_{OH} = 5.5 V						0.25	mA
	V_{CC} = MIN, V_{IH} = 2 V, V_{IL} = 0.7 V, V_{OH} = 5.5 V			0.25				
V_{OL}	V_{CC} = MIN, V_{IH} = 2 V, V_{IL} = 0.8 V, I_{OL} = 16 mA		0.2	0.4		0.2	0.4	V
I_I	V_{CC} = MAX, V_I = 5.5 V			1			1	mA
I_{IH}	V_{CC} = MAX, V_I = 2.4 V			40			40	μA
I_{IL}	V_{CC} = MAX, V_I = 0.4 V			−1.6			−1.6	mA
I_{CC}	V_{CC} = MAX, See Note 2		30	43		30	50	mA

† For conditions shown as MIN or MAX, use the appropriate value specified under recommended operating conditions.
‡ All typical values are at V_{CC} = 5 V, T_A = 25°C.
NOTE 2: I_{CC} is measured with one input of each gate at 4.5 V, the other inputs grounded, and the outputs open.

switching characteristics, V_{CC} = 5 V, T_A = 25°C

PARAMETER‡	FROM (INPUT)	TEST CONDITIONS		MIN	TYP	MAX	UNIT
t_{PLH}	A or B	Other input low	C_L = 15 pF, R_L = 400 Ω, See Note 3		12	18	ns
t_{PHL}					39	50	
t_{PLH}	A or B	Other input high			14	22	ns
t_{PHL}					42	55	

t_{PLH} propagation delay time, low to high level output
t_{PHL} propagation delay time, high to low level output
NOTE 3. Load circuits and voltage waveforms are shown in Section 1.

TEXAS INSTRUMENTS
POST OFFICE BOX 655012 • DALLAS, TEXAS 75265

absolute maximum ratings over operating free-air temperature range (unless otherwise noted)

Supply voltage, V_{CC} (see Note 1) . . . . . 7 V
Input voltage . . . . . 7 V
Operating free-air temperature range: SN54LS136 . . . . . −55°C to 125°C
SN74LS136 . . . . . 0°C to 70°C
Storage temperature range . . . . . −65°C to 150°C

NOTE 1: Voltage values are with respect to network ground terminal.

recommended operating conditions

	SN54LS136			SN74LS136			UNIT
	MIN	NOM	MAX	MIN	NOM	MAX	
Supply voltage, V_{CC}	4.5	5	5.5	4.75	5	5.25	V
High-level output voltage, V_{OH}			5.5			5.5	V
Low-level output current, I_{OL}			4			8	mA
Operating free-air temperature, T_A	−55		125	0		70	°C

electrical characteristics over recommended operating free-air temperature range (unless otherwise noted)

PARAMETER		TEST CONDITIONS†		SN54LS136			SN74LS136			UNIT
				MIN	TYP‡	MAX	MIN	TYP‡	MAX	
V_{IH}	High-level input voltage			2			2			V
V_{IL}	Low-level input voltage					0.7			0.8	V
V_{IK}	Input clamp voltage	V_{CC} = MIN,	I_I = −18 mA			−1.5			−1.5	V
I_{OH}	High-level output current	V_{CC} = MIN, V_{IL} = V_{IL} max,	V_{IH} = 2 V, V_{OH} = 5.5 V			100			100	μA
V_{OL}	Low-level output voltage	V_{CC} = MIN, V_{IH} = 2 V, V_{IL} = V_{IL} max	I_{OL} = 4 mA		0.25	0.4		0.25	0.4	V
			I_{OL} = 8 mA					0.35	0.5	
I_I	Input current at maximum input voltage	V_{CC} = MAX,	V_I = 7 V			0.2			0.2	mA
I_{IH}	High-level input current	V_{CC} = MAX,	V_I = 2.7 V			40			40	μA
I_{IL}	Low-level input current	V_{CC} = MAX,	V_I = 0.4 V			−0.8			−0.8	mA
I_{CC}	Supply current	V_{CC} = MAX,	See Note 2		6.1	10		6.1	10	mA

†For conditions shown as MIN or MAX, use the appropriate value specified under recommended operating conditions for the applicable type.
‡All typical values are at V_{CC} = 5 V, T_A = 25°C.
NOTE 2: I_{CC} is measured with one input of each gate at 4.5 V, the other inputs grounded, and the outputs open.

switching characteristics, V_{CC} = 5 V, T_A = 25°C

PARAMETER*	FROM (INPUT)	TEST CONDITIONS		MIN	TYP	MAX	UNIT
t_{PLH}	A or B	Other input low	C_L = 15 pF, R_L = 2 kΩ, (See Note 3)		18	30	ns
t_{PHL}					18	30	
t_{PLH}	A or B	Other input high			18	30	ns
t_{PHL}					18	30	

*t_{PLH} propagation delay time, low-to-high level output
t_{PHL} propagation delay time, high-to-low level output
NOTE 3: Load circuits and voltage waveforms are shown in Section 1.

D2416, . . . 1978 – REVISED MARCH 1988

- **Combines Decoder and 3-Bit Address Latch**
- **Incorporates 2 Enable Inputs to Simplify Cascading**
- **Low Power Dissipation . . . 65 mW Typ**

SN54LS137 . . . J OR W PACKAGE
SN74LS137 . . . D OR N PACKAGE
(TOP VIEW)

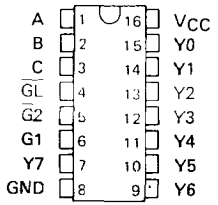

SN54LS137 . . . FK PACKAGE
(TOP VIEW)

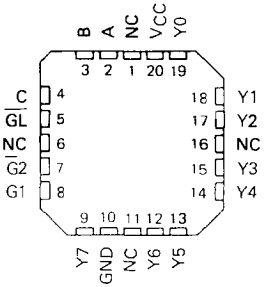

NC No internal connection

description

The 'LS137 is a three-line to eight-line decoder/demultiplexer with latches on the three address inputs. When the latch-enable input ($\overline{GL}$) is low, the 'LS137 acts as a decoder/demultiplexer. When $\overline{GL}$ goes from low to high, the address present at the select inputs (A,B, and C) is stored in the latches. Further address changes are ignored as long as $\overline{GL}$ remains high. The output enable controls, G1 and $\overline{G2}$, control the state of the outputs independently of the select or latch-enable inputs. All of the outputs are high unless G1 is high and $\overline{G2}$ is low. The 'LS137 is ideally suited for implementing glitch-free decoders in strobed (stored-address) applications in bus-oriented systems.

schematics of inputs and outputs

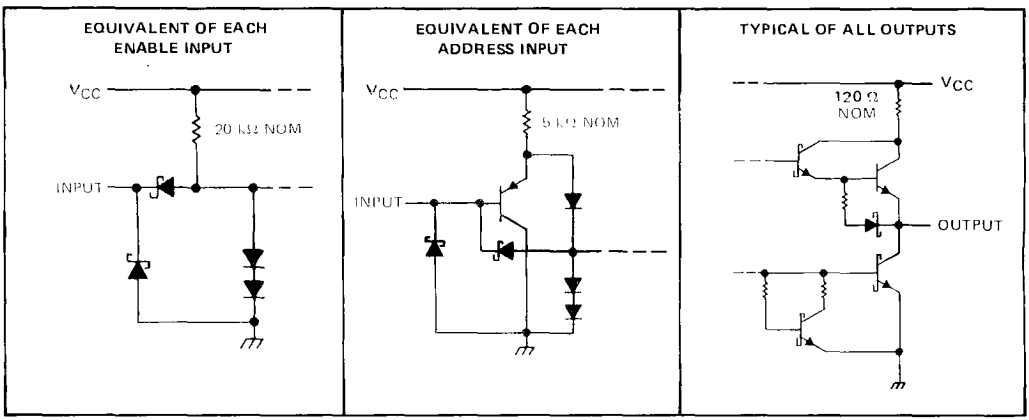

PRODUCTION DATA documents contain information current as of publication date. Products conform to specifications per the terms of Texas Instruments standard warranty. Production processing does not necessarily include testing of all parameters.

logic symbols†

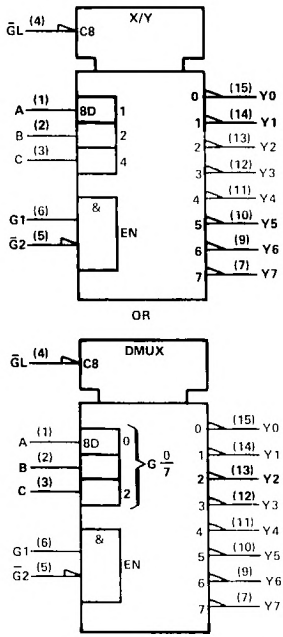

†These symbols are in accordance with ANSI/IEEE Std 91-1984 and IEC Publication 617-12.
Pin numbers shown are for D, J, N, and W packages.

FUNCTION TABLE

INPUTS						OUTPUTS							
ENABLE			SELECT										
$\overline{G1}$	G1	$\overline{G2}$	C	B	A	Y0	Y1	Y2	Y3	Y4	Y5	Y6	Y7
X	X	H	X	X	X	H	H	H	H	H	H	H	H
X	L	X	X	X	X	H	H	H	H	H	H	H	H
L	H	L	L	L	L	L	H	H	H	H	H	H	H
L	H	L	L	L	H	H	L	H	H	H	H	H	H
L	H	L	L	H	L	H	H	L	H	H	H	H	H
L	H	L	L	H	H	H	H	H	L	H	H	H	H
L	H	L	H	L	L	H	H	H	H	L	H	H	H
L	H	L	H	L	H	H	H	H	H	H	L	H	H
L	H	L	H	H	L	H	H	H	H	H	H	L	H
L	H	L	H	H	H	H	H	H	H	H	H	H	L
H	H	L	X	X	X	Output corresponding to stored address, L; all others, H							

H = high level, L = low level, X = irrelevant

TEXAS INSTRUMENTS
POST OFFICE BOX 655012 • DALLAS, TEXAS 75265

logic diagram (positive logic)

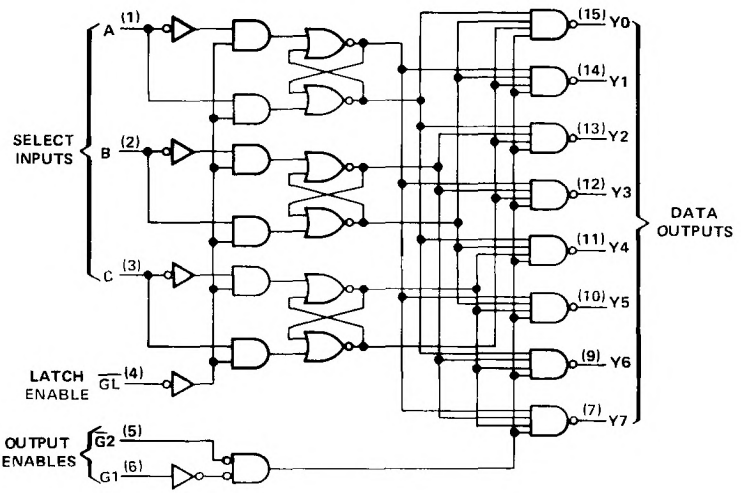

Pin numbers shown are for D, J, N, and W packages

absolute maximum ratings over operating free-air temperature range (unless otherwise noted)

Supply voltage, V_{CC} (See Note 1) . . . . . 7 V
Input voltage . . . . . 7 V
Operating free-air temperature range: SN54LS137 . . . . . −55°C to 125°C
SN74LS137 . . . . . 0°C to 70°C
Storage temperature range . . . . . −65°C to 150°C

NOTE 1: Voltage values are with respect to network ground terminal.

recommended operating conditions

	SN54LS137			SN74LS137			UNIT
	MIN	NOM	MAX	MIN	NOM	MAX	
Supply voltage, V_{CC}	4.5	5	5.5	4.75	5	5.25	V
High-level output current, I_{OH}			−400			−400	μA
Low-level output current, I_{OL}			4			8	mA
Width of enabling pulse at $\overline{G1}$, t_w	15			15			ns
Setup time at A, B, and C inputs, t_{su}	10			10			ns
Hold time at A, B, and C inputs, t_h	10			10			ns
Operating free-air temperature, T_A	−55		125	0		70	°C

electrical characteristics over recommended operating free-air temperature range (unless otherwise noted)

PARAMETER		TEST CONDITIONS†			SN54LS137			SN74LS137			UNIT
					MIN	TYP‡	MAX	MIN	TYP‡	MAX	
V_{IH}	High-level input voltage				2			2			V
V_{IL}	Low-level input voltage						0.7			0.8	V
V_{IK}	Input clamp voltage	V_{CC} = MIN,	I_I = −18 mA				−1.5			−1.5	V
V_{OH}	High-level output voltage	V_{CC} = MIN, V_{IL} = V_{IL} max,	V_{IH} = 2 V, I_{OH} = −400 μA		2.5	3.5		2.7	3.5		V
V_{OL}	Low-level output voltage	V_{CC} = MIN, V_{IL} = V_{IL} max	V_{IH} = 2 V,	I_{OL} = 4 mA		0.25	0.4		0.25	0.4	V
				I_{OL} = 8 mA					0.35	0.5	
I_I	Input current at maximum input voltage	V_{CC} = MAX,	V_I = 7 V				0.1			0.1	mA
I_{IH}	High-level input current	V_{CC} = MAX,	V_I = 2.7 V				20			20	μA
I_{IL}	Low-level input current	V_{CC} = MAX,	V_I = 0.4 V	Enable			−0.4			−0.4	mA
				A, B, C			−0.2			−0.2	
I_{OS}	Short-circuit output current§	V_{CC} = MAX			−20		−100	−20		−100	mA
I_{CC}	Supply current	V_{CC} = MAX,	See Note 2			11	18		11	18	mA

† For conditions shown as MIN or MAX, use the appropriate value specified under recommended operating conditions.
‡ All typical values are at V_{CC} = 5 V, T_A = 25°C.
§ Not more than one output should be shorted at a time, and duration of the short circuit should not exceed one second.
NOTE 2: I_{CC} is tested with all inputs grounded and all outputs open.

switching characteristics, V_{CC} = 5 V, T_A = 25°C, see note 3

PARAMETER¶	FROM (INPUT)	TO (OUTPUT)	LEVELS OF DELAY	TEST CONDITIONS	MIN	TYP	MAX	UNIT
t_{PLH}	A, B, C	Y	2	C_L = 15 pF, R_L = 2 kΩ, See Note 3		11	17	ns
t_{PHL}			4			25	38	
t_{PLH}	A, B, C	Y	3			16	24	ns
t_{PHL}			3			19	29	
t_{PLH}	Enable $\overline{G2}$	Y	2			13	21	ns
t_{PHL}			2			16	27	
t_{PLH}	Enable G1	Y	3			14	21	ns
t_{PHL}			3			18	27	
t_{PLH}	Enable $\overline{G1}$	Y	3			18	27	ns
t_{PHL}			4			25	38	

¶ t_{PLH} = propagation delay time, low-to-high-level output.
t_{PHL} = propagation delay time, high-to-low-level output.
NOTE 3: Load circuits and voltage waveforms are shown in Section 1.

TEXAS INSTRUMENTS
POST OFFICE BOX 655012 • DALLAS, TEXAS 75265

DECEMBER 1972—REVISED M.

- **Designed Specifically for High-Speed:**
  Memory Decoders
  Data Transmission Systems
- **3 Enable Inputs to Simplify Cascading and/or Data Reception**
- **Schottky-Clamped for High Performance**

description

These Schottky-clamped TTL MSI circuits are designed to be used in high-performance memory decoding or data-routing applications requiring very short propagation delay times. In high-performance memory systems, these docoders can be used to minimize the effects of system decoding. When employed with high-speed memories utilizing a fast enable circuit, the delay times of these decoders and the enable time of the memory are usually less than the typical access time of the memory. This means that the effective system delay introduced by the Schottky-clamped system decoder is negligible.

The 'LS138, SN54S138, and SN74S138A decode one of eight lines dependent on the conditions at the three binary select inputs and the three enable inputs. Two active-low and one active-high enable inputs reduce the need for external gates or inverters when expanding. A 24-line decoder can be implemented without external inverters and a 32-line decoder requires only one inverter. An enable input can be used as a data input for demultiplexing applications.

All of these decoder/demultiplexers feature fully buffered inputs, each of which represents only one normalized load to its driving circuit. All inputs are clamped with high-performance Schottky diodes to suppress line-ringing and to simplify system design.

The SN54LS138 and SN54S138 are characterized for operation over the full military temperature range of −55°C to 125°C. The SN74LS138 and SN74S138A are characterized for operation from 0°C to 70°C.

SN54LS138, SN54S138 . . . J OR W PACKAGE
SN74LS138, SN74S138A . . . D OR N PACKAGE
(TOP VIEW)

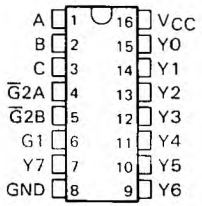

SN54LS138, SN54S138 . . . FK PACKAGE
(TOP VIEW)

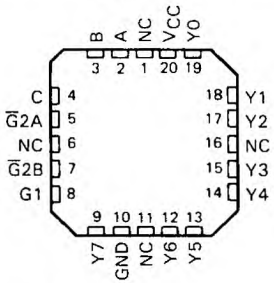

NC—No internal connection

logic symbols†

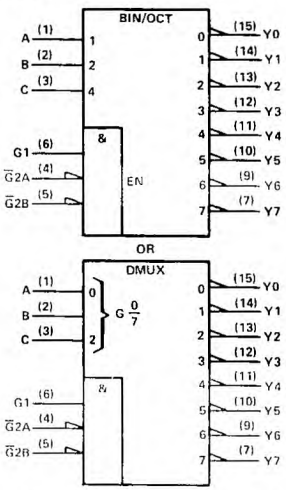

†These symbols are in accordance with ANSI/IEEE Std 91-1984 and IEC Publication 617-12.
Pin numbers shown are for D, J, N, and W packages.

PRODUCTION DATA documents contain information current as of publication date. Products conform to specifications per the terms of Texas Instruments standard warranty. Production processing does not necessarily include testing of all parameters.

Copyright © 1972, Texas Instruments Incorporated

logic diagram and function table

'LS138, SN54S138, SN74S138A

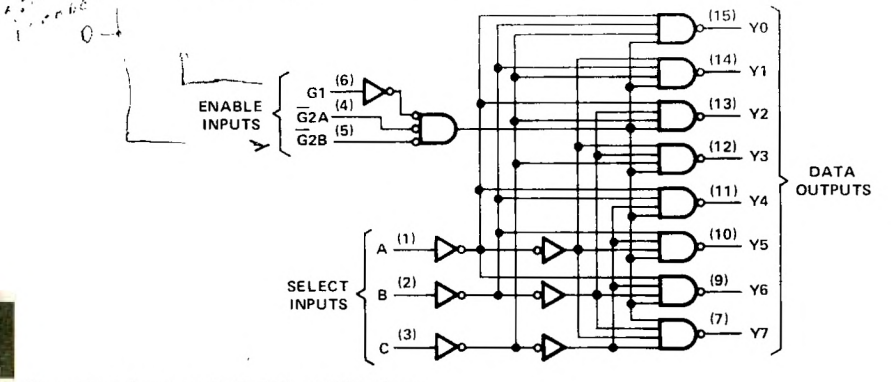

Pin numbers shown are for D, J, N, and W packages.

'LS138, SN54138, SN74S138A
FUNCTION TABLE

INPUTS					OUTPUTS							
ENABLE		SELECT										
G1	$\overline{G2}$*	C	B	A	Y0	Y1	Y2	Y3	Y4	Y5	Y6	Y7
X	H	X	X	X	H	H	H	H	H	H	H	H
L	X	X	X	X	H	H	H	H	H	H	H	H
H	L	L	L	L	L	H	H	H	H	H	H	H
H	L	L	L	H	H	L	H	H	H	H	H	H
H	L	L	H	L	H	H	L	H	H	H	H	H
H	L	L	H	H	H	H	H	L	H	H	H	H
H	L	H	L	L	H	H	H	H	L	H	H	H
H	L	H	L	H	H	H	H	H	H	L	H	H
H	L	H	H	L	H	H	H	H	H	H	L	H
H	L	H	H	H	H	H	H	H	H	H	H	L

* $\overline{G2}$ = $\overline{G2A}$ + $\overline{G2B}$

H = high level, L = low level, X = irrelevant

TEXAS INSTRUMENTS
POST OFFICE BOX 655012 • DALLAS, TEXAS 75265

schematics of inputs and outputs

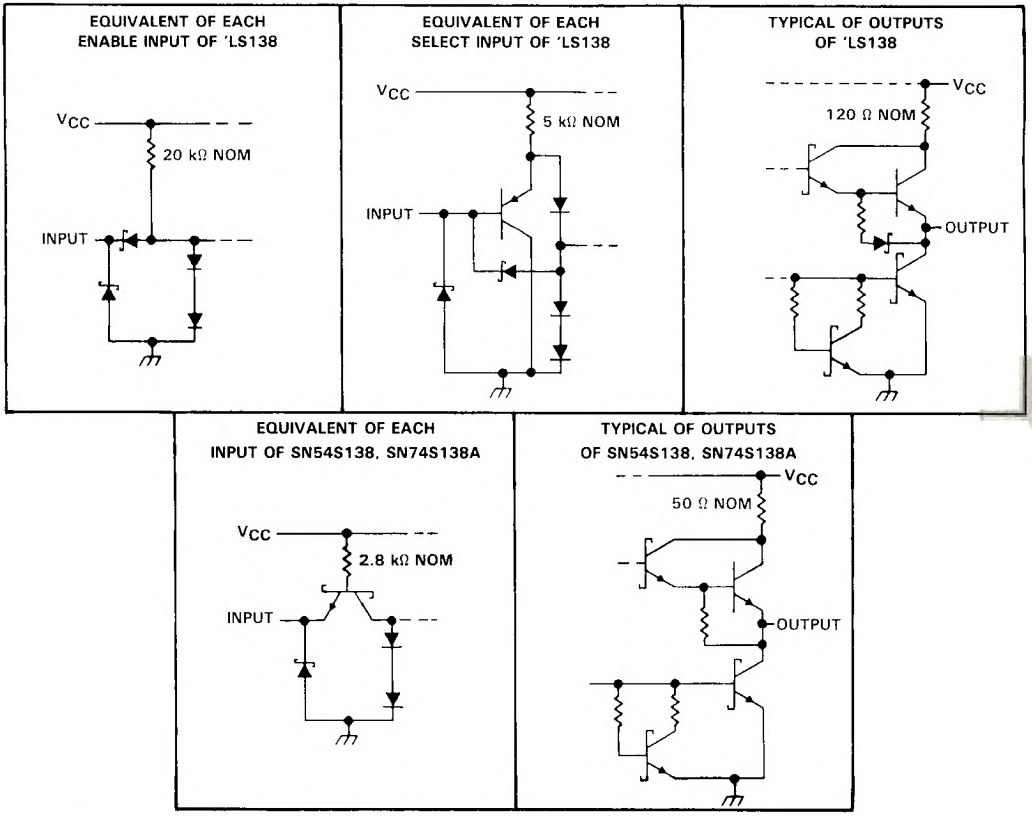

absolute maximum ratings over operating free-air temperature range (unless otherwise noted)

Supply voltage, V_{CC} (see Note 1) . . . . . 7 V
Input voltage . . . . . 7 V
Operating free-air temperature range: SN54LS138, SN54S138 . . . . . −55°C to 125°C
SN74LS138, SN74S138A . . . . . 0°C to 70°C
Storage temperature range . . . . . −65°C to 150°C

NOTE 1: Voltage values are with respect to network ground terminal.

recommended operating conditions

		SN54LS138			SN74LS138			UNIT
		MIN	NOM	MAX	MIN	NOM	MAX	
V_{CC}	Supply voltage	4.5	5	5.5	4.75	5	5.25	V
V_{IH}	High-level input voltage	2			2			V
V_{IL}	Low-level input voltage			0.7			0.8	V
I_{OH}	High-level output current			−0.4			−0.4	mA
I_{OL}	Low-level output current			4			8	mA
T_A	Operating free-air temperature	−55		125	0		70	°C

electrical characteristics over recommended operating free-air temperature range (unless otherwise noted)

PARAMETER	TEST CONDITIONS†		SN54LS138			SN74LS138			UNIT
			MIN	TYP‡	MAX	MIN	TYP‡	MAX	
V_{IK}	V_{CC} = MIN, I_I = −18 mA				−1.5			−1.5	V
V_{OH}	V_{CC} = MIN, V_{IH} = 2 V, V_{IL} MAX, I_{OH} = −0.4 mA		2.5	3.4		2.7	3.4		V
V_{OL}	V_{CC} = MIN, V_{IH} = 2 V, V_{IL} = MAX	I_{OL} = 4 mA		0.25	0.4		0.25	0.4	V
		I_{OL} = 8 mA					0.35	0.5	
I_I	V_{CC} = MAX, V_I = 7 V				0.1			0.1	mA
I_{IH}	V_{CC} = MAX, V_I = 2.7 V				20			20	μA
I_{IL}	V_{CC} = MAX, V_I = 0.4 V	Enable			−0.4			−0.4	mA
		A, B, C			−0.2			−0.2	
I_{OS}§	V_{CC} = MAX		−20		−100	−20		−100	mA
I_{CC}	V_{CC} = MAX, Outputs enabled and open			6.3	10		6.3	10	mA

† For conditions shown as MIN or MAX, use the appropriate value specified under recommended operating conditions.
‡ All typical values are at V_{CC} = 5 V, T_A = 25°C.
§ Not more than one output should be shorted at a time, and duration of the short-circuit test should not exceed one second.

switching characteristics, V_{CC} = 5 V, T_A = 25°C

PARAMETER¶	FROM (INPUT)	TO (OUTPUT)	LEVELS OF DELAY	TEST CONDITIONS	SN54LS138 SN74LS138			UNIT
					MIN	TYP	MAX	
t_{PLH}	Binary Select	Any	2	R_L = 2 kΩ, C_L = 15 pF, See Note 2		11	20	ns
t_{PHL}						18	41	ns
t_{PLH}			3			21	27	ns
t_{PHL}						20	39	ns
t_{PLH}	Enable	Any	2			12	18	ns
t_{PHL}						20	32	ns
t_{PLH}			3			14	26	ns
t_{PHL}						13	38	ns

¶ t_{PLH} = propagation delay time, low-to-high-level ouput
t_{PHL} = propagation delay time, high-to-low-level output
NOTE 2: Load circuits and voltage waveforms are shown in Section 1.

TEXAS INSTRUMENTS
POST OFFICE BOX 655012 • DALLAS, TEXAS 75265

absolute maximum ratings over operating free-air temperature range (unless otherwise noted)

Supply voltage, V_{CC} (see Note 1) . . . . . 7 V
Input voltage . . . . . 5.5 V
Operating free-air temperature range: SN54S138 . . . . . −55°C to 125°C
SN74S138A . . . . . 0°C to 70°C
Storage temperature range . . . . . −65°C to 150°C

NOTE 1: Voltage values are with respect to network ground terminal.

recommended operating conditions

		SN54S138			SN74S138A			UNIT
		MIN	NOM	MAX	MIN	NOM	MAX	
V_{CC}	Supply voltage	4.5	5	5.5	4.75	5	5.25	V
V_{IH}	High-level input voltage	2			2			V
V_{IL}	Low-level input voltage			0.8			0.8	V
I_{OH}	High-level output current			−1			−1	mA
I_{OL}	Low-level output current			20			20	mA
T_A	Operating free-air temperature	−55		125	0		70	°C

electrical characteristics over recommended operating free-air temperature range (unless otherwise noted)

PARAMETER	TEST CONDITIONS†		SN54S138 / SN74S138A			UNIT
			MIN	TYP‡	MAX	
V_{IK}	V_{CC} = MIN, I_I = −18 mA				−1.2	V
V_{OH}	V_{CC} = MIN, V_{IH} = 2 V, V_{IL} = 0.8 V, I_{OH} = −1 mA	SN54S'	2.5	3.4		V
		SN74S'	2.7	3.4		
V_{OL}	V_{CC} = MIN, V_{IH} = 2 V, V_{IL} = 0.8 V, I_{OL} = 20 mA				0.5	V
I_I	V_{CC} = MAX, V_I = 5.5 V				1	mA
I_{IH}	V_{CC} = MAX, V_I = 2.7 V				50	μA
I_{IL}	V_{CC} = MAX, V_I = 0.5 V				−2	mA
I_{OS}§	V_{CC} = MAX		−40		−100	mA
I_{CC}	V_{CC} = MAX, Outputs enabled and open			49	74	mA

† For conditions shown as MIN or MAX, use the appropriate value specified under recommended operating conditions.
‡ All typical values are at V_{CC} = 5 V, T_A = 25°C.
§ Not more than one output should be shorted at a time, and duration of the short circuit test should not exceed one second.

switching characteristics, V_{CC} = 5 V, T_A = 25°C

PARAMETER†	FROM (INPUT)	TO (OUTPUT)	LEVELS OF DELAY	TEST CONDITIONS	SN54S138 SN74S138A			UNIT
					MIN	TYP	MAX	
t_{PLH}	Binary Select	Any	2	R_L = 280 Ω, C_L = 15 pF, See Note 2		4.5	7	ns
t_{PHL}						7	10.5	ns
t_{PLH}			3			7.5	12	ns
t_{PHL}						8	12	ns
t_{PLH}	Enable	Any	2			5	8	ns
t_{PHL}						7	11	ns
t_{PLH}			3			7	11	ns
t_{PHL}						7	11	ns

†t_{PLH} = propagation delay time, low-to-high-level output
t_{PHL} = propagation delay time, high-to-low-level output
NOTE 2: Load circuits and voltage waveforms are shown in Section 1.

TEXAS INSTRUMENTS
POST OFFICE BOX 655012 • DALLAS, TEXAS 75265

DECEMBER 1972—REVISED MARCH 1988

- **Designed Specifically for High-Speed:**
  Memory Decoders
  Data Transmission Systems
- **Two Fully Independent 2- to 4-Line Decoders/Demultiplexers**
- **Schottky Clamped for High Performance**

description

These Schottky-clamped TTL MSI circuits are designed to be used in high-performance memory-decoding or data-routing applications requiring very short propagation delay times. In high-performance memory systems, these decoders can be used to minimize the effects of system decoding. When employed with high-speed memories utilizing a fast-enable circuit, the delay times of these decoders and the enable time of the memory are usually less than the typical access time of the memory. This means that the effective system delay introduced by the Schottky-clamped system decoder is negligible.

The circuit comprises two individual two-line to four-line decoders in a single package. The active-low enable input can be used as a data line in demultiplexing applications.

All of these decoders/demultiplexers feature fully buffered inputs, each of which represents only one normalized load to its driving circuit. All inputs are clamped with high-performance Schottky diodes to suppress line-ringing and to simplify system design. The SN54LS139A and SN54S139 are characterized for operation range of −55°C to 125°C. The SN74LS139A and SN74S139A are characterized for operation from 0°C to 70°C.

FUNCTION TABLE

INPUTS			OUTPUTS			
ENABLE	SELECT					
$\overline{G}$	B	A	Y0	Y1	Y2	Y3
H	X	X	H	H	H	H
L	L	L	L	H	H	H
L	L	H	H	L	H	H
L	H	L	H	H	L	H
L	H	H	H	H	H	L

H = high level, L = low level, X = irrelevant

SN54LS139A, SN54S139 . . . J OR W PACKAGE
SN74LS139A, SN74S139A . . . D OR N PACKAGE
(TOP VIEW)

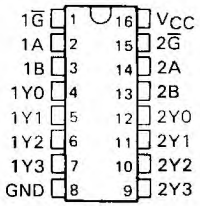

SN54LS139A, SN54S139 . . . FK PACKAGE
(TOP VIEW)

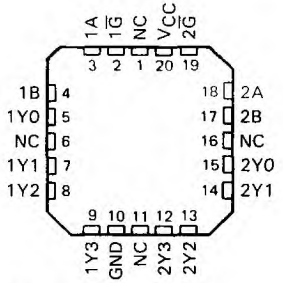

NC—No internal connection

logic symbols (alternatives)†

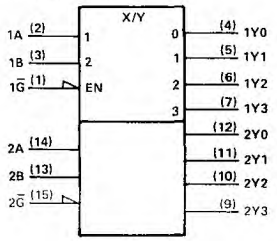

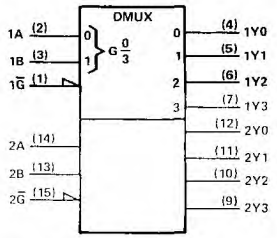

†These symbols are in accordance with ANSI/IEEE Std. 91-1984 and IEC Publication 617-12.
Pin numbers shown are for D, J, N, and W packages

PRODUCTION DATA documents contain information current as of publication date. Products conform to specifications per the terms of Texas Instruments standard warranty. Production processing does not necessarily include testing of all parameters.

Copyright © 1972, Texas Instruments Incorporated

logic diagram (positive logic)

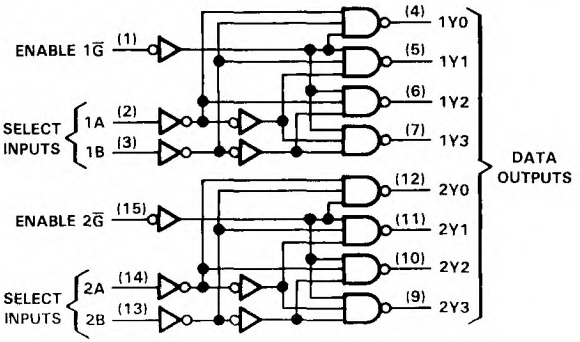

Pin numbers shown are for D, J, N, and W packages

schematics of inputs and outputs

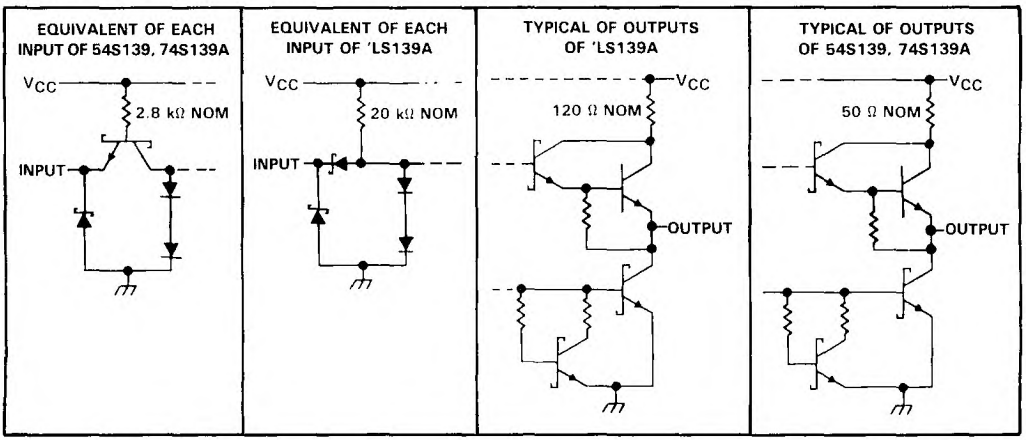

absolute maximum ratings over operating free-air temperature range (unless otherwise noted)

Supply voltage, V_{CC} (See Note 1) . . . . . 7 V
Input voltage: 'LS139A . . . . . 7 V
54S139, 74S139A . . . . . 5.5 V
Operating free-air temperature range: SN54LS139A, SN54S139 . . . . . −55°C to 125°C
SN74LS139A, SN74S139A . . . . . 0° C to 70°C
Storage temperature range . . . . . −65°C to 150°C

NOTE 1: Voltage values are with respect to network ground terminal.

TEXAS INSTRUMENTS
POST OFFICE BOX 655012 • DALLAS, TEXAS 75265

recommended operating conditions

		SN54LS139A			SN74LS139A			UNIT
		MIN	NOM	MAX	MIN	NOM	MAX	
V_{CC}	Supply voltage	4.5	5	5.5	4.75	5	5.25	V
V_{IH}	High-level input voltage	2			2			V
V_{IL}	Low-level input voltage			0.7			0.8	V
I_{OH}	High-level output current			−0.4			−0.4	mA
I_{OL}	Low-level output current			4			8	mA
T_A	Operating free-air temperature	−55		125	0		70	°C

electrical characteristics over recommended operating free-air temperature range (unless otherwise noted)

PARAMETER	TEST CONDITIONS†		SN54LS139A			SN74LS139A			UNIT
			MIN	TYP‡	MAX	MIN	TYP‡	MAX	
V_{IK}	V_{CC} = MIN, I_I = −18 mA				−1.5			−1.5	V
V_{OH}	V_{CC} = MIN, V_{IH} = 2 V, V_{IL} = MAX, I_{OH} = −0.4 mA		2.5	3.4		2.7	3.4		V
V_{OL}	V_{CC} = MIN, V_{IH} = 2 V, V_{IL} = MAX	I_{OL} = 4 mA		0.25	0.4		0.25	0.4	V
		I_{OL} = 8 mA					0.35	0.5	
I_I	V_{CC} = MAX, V_I = 7 V				0.1			0.1	mA
I_{IH}	V_{CC} = MAX, V_I = 2.7 V				20			20	μA
I_{IL}	V_{CC} = MAX, V_I = 0.4 V				−0.4			−0.4	mA
I_{OS}§	V_{CC} = MAX		−20		−100	−20		−100	mA
I_{CC}	V_{CC} = MAX, Outputs enabled and open			6.8	11		6.8	11	mA

† For conditions shown as MIN or MAX, use the appropriate value specified under recommended operating conditions.
‡ All typical values are at V_{CC} = 5 V, T_A = 25°C.
§ Not more than one output should be shorted at a time, and duration of the short circuit test should not exceed one second.

switching characteristics, V_{CC} = 5 V, T_A = 25°C (see Note 2)

PARAMETER¶	FROM (INPUT)	TO (OUTPUT)	LEVELS OF DELAY	TEST CONDITIONS	SN54LS139A SN74LS139A			UNIT
					MIN	TYP	MAX	
t_{PLH}	Binary Select	Any	2	R_L = 2 kΩ, C_L = 15 pF		13	20	ns
t_{PHL}						22	33	ns
t_{PLH}			3			18	29	ns
t_{PHL}						25	38	ns
t_{PLH}	Enable	Any	2			16	24	ns
t_{PHL}						21	32	ns

¶ t_{PLH} = propagation delay time, low-to-high-level output
t_{PHL} = propagation delay time, high-to-low-level output
NOTE 2: Load circuits and voltage waveforms are shown in Section 1.

recommended operating conditions

		SN54S139			SN74S139A			UNIT
		MIN	NOM	MAX	MIN	NOM	MAX	
V_{CC}	Supply voltage	4.5	5	5.5	4.75	5	5.25	V
V_{IH}	High-level input voltage	2			2			V
V_{IL}	Low-level input voltage			0.8			0.8	V
I_{OH}	High-level output current			−1			−1	mA
I_{OL}	Low-level output current			20			20	mA
T_A	Operating free-air temperature	−55		125	0		70	°C

electrical characteristics over recommended operating free-air temperature range (unless otherwise noted)

PARAMETER	TEST CONDITIONS†				SN54S139 SN74S139A			UNIT
					MIN	TYP‡	MAX	
V_{IK}	V_{CC} = MIN,	I_I = −18 mA					−1.2	V
V_{OH}	V_{CC} = MIN,	V_{IH} = 2 V,	V_{IL} = 0.8 V,	'..'S'	2.5	3.4		V
	I_{OH} = −1 mA			'..'S'	2.7	3.4		
V_{OL}	V_{CC} = MIN, I_{OL} = 20 mA	V_{IH} = 2 V,	V_{IL} = 0.8 V,				0.5	V
I_I	V_{CC} = MAX,	V_I = 5.5 V					1	mA
I_{IH}	V_{CC} = MAX,	V_I = 2.7 V					50	μA
I_{IL}	V_{CC} = MAX,	V_I = 0.5 V					−2	mA
I_{OS}§	V_{CC} = MAX				−40		−100	mA
I_{CC}	V_{CC} = MAX,	Outputs enabled and open				60	90	mA

† For conditions shown as MIN or MAX, use the appropriate value specified under recommended operating conditions.
‡ All typical values are at V_{CC} = 5 V, T_A = 25°C.
§ Not more than one output should be shorted at a time, and duration of the short circuit test should not exceed one second.

switching characteristics, V_{CC} = 5 V, T_A = 25°C (see Note 2)

PARAMETER¶	FROM (INPUT)	TO (OUTPUT)	LEVELS OF DELAY	TEST CONDITIONS	SN54S139 SN74S139A			UNIT
					MIN	TYP	MAX	
t_{PLH}	Binary Select	Any	2	R_L = 280 Ω, C_L = 15 pF		5	7.5	ns
t_{PHL}						6.5	10	ns
t_{PLH}			3			7	12	ns
t_{PHL}						8	12	ns
t_{PLH}	Enable	Any	2			5	8	ns
t_{PHL}						6.5	10	ns

¶ t_{PLH} = propagation delay time, low-to-high-level output
t_{PHL} = propagation delay time, high-to-low-level output
NOTE 2: Load circuits and voltage waveforms are shown in Section 1.

TEXAS INSTRUMENTS
POST OFFICE BOX 655012 • DALLAS, TEXAS 75265

DECEMBER 1983—REVISED MARCH 1988

- **Package Options Include Ceramic Chip Carriers and Flat Packages in Addition to Plastic and Ceramic DIPs**
- **Dependable Texas Instruments Quality and** Reliability

description

These devices contain two independent 4-input positive-NAND 50-ohm line drivers. They perform the Boolean function $Y = \overline{ABCD}$.

The SN54S140 is characterized for operation over the full military temperature range of −55°C to 125°C. The SN74S140 is characterized for operation from 0°C to 70°C.

logic diagram (each driver)

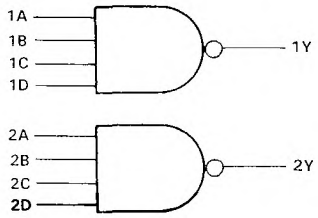

logic symbol†

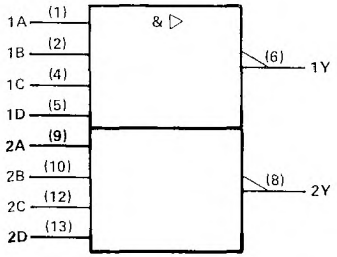

†This symbol is in accordance with ANSI/IEEE Std. 91-1984 and IEC Publication 617-12.
Pin numbers shown are for D, J, N, and W packages.

SN54S140 . . . J OR W PACKAGE
SN74S140 . . . D OR N PACKAGE
(TOP VIEW)

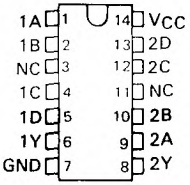

SN54S140 . . . FK PACKAGE
(TOP VIEW)

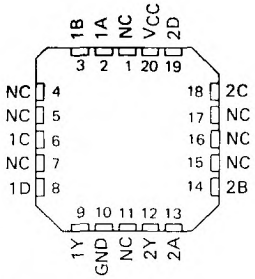

NC—No internal connection

2 TTL Devices

PRODUCTION DATA documents contain information current as of publication date. Products conform to specifications per the terms of Texas Instruments standard warranty. Production processing does not necessarily include testing of all parameters.

schematic (each driver)

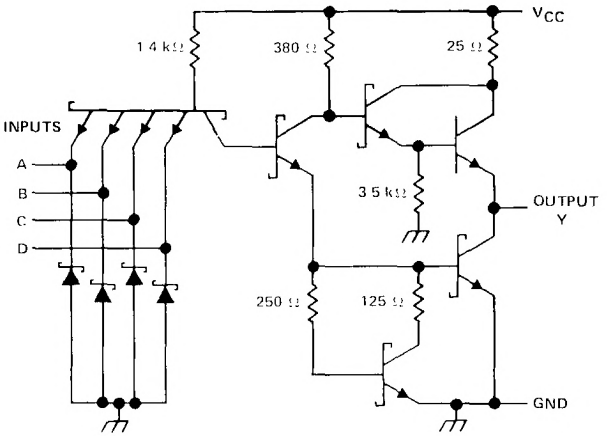

Resistor values shown are nominal.

absolute maximum ratings over operating free-air temperature range (unless otherwise noted)

Supply voltage, V_{CC} (see Note 1) . . . . . 7 V
Input voltage . . . . . 5.5 V
Operating free-air temperature range: SN54' . . . . . −55°C to 125°C
SN74' . . . . . 0°C to 70°C
Storage temperature range . . . . . −65°C to 150°C

NOTE 1: Voltage values are with respect to network ground terminal.

TEXAS INSTRUMENTS
POST OFFICE BOX 655012 • DALLAS, TEXAS 75265

recommended operating conditions

		SN54S140			SN74S140			UNIT
		MIN	NOM	MAX	MIN	NOM	MAX	
V_{CC}	Supply voltage	4.5	5	5.5	4.75	5	5.25	V
V_{IH}	High-level input voltage	2			2			V
V_{IL}	Low-level input voltage			0.8			0.8	V
I_{OH}	High-level output current			−40			−40	mA
I_{OL}	Low-level output current			60			60	mA
T_A	Operating free-air temperature	−55		125	0		70	°C

electrical characteristics over recommended operating free-air temperature range (unless otherwise noted)

PARAMETER	TEST CONDITIONS†			SN54S140			SN74S140			UNIT
				MIN	TYP‡	MAX	MIN	TYP‡	MAX	
V_{IK}	V_{CC} = MIN,	I_I = −18 mA				−1.2			−1.2	V
V_{OH}	V_{CC} = MIN,	V_{IL} = 0.8 V,	I_{OH} = −3 mA	2.5	3.4		2.7	3.4		V
	V_{CC} = MIN,	V_{IL} = 0.5 V,	R_O = 50 Ω to GND	2			2			
V_{OL}	V_{CC} = MIN,	V_{IH} = 2 V,	I_{OL} = 60 mA			0.5			0.5	V
I_I	V_{CC} = MAX,	V_I = 5.5 V				1			1	mA
I_{IH}	V_{CC} = MAX,	V_{IH} = 2.7 V				0.1			0.1	mA
I_{IL}	V_{CC} = MAX,	V_{IL} = 0.5 V				−4			−4	mA
I_{OS}§	V_{CC} = MAX			−50		−225	−50		−225	mA
I_{CCH}	V_{CC} = MAX,	V_I = 0 V			10	18		10	18	mA
I_{CCL}	V_{CC} = MAX,	V_I = 4.5 V			25	44		25	44	mA

† For conditions shown as MIN or MAX, use the appropriate value specified under recommended operating conditions.
‡ All typical values are at V_{CC} = 5 V, T_A = 25°C.
§ Not more than one output should be shorted at a time, and the duration of the short circuit should not exceed 100 milliseconds.

switching characteristics, V_{CC} = 5 V, T_A = 25°C (see note 2)

PARAMETER	FROM (INPUT)	TO (OUTPUT)	TEST CONDITIONS		MIN	TYP	MAX	UNIT
t_{PLH}	Any	Y	R_L = 93 Ω,	C_L = 50 pF		4	6.5	ns
t_{PHL}						4	6.5	ns
t_{PLH}			R_L = 93 Ω,	C_L = 150 pF		6		ns
t_{PHL}						6		ns

NOTE 2: Load circuits and voltage waveforms are shown in Section 1.

NOVEMBER 1971—REV MARCH

- **15-mA Constant-Current Outputs**

  For Driving Common-Anode LEDs such as TIL302 or TIL303 Without Series Resistors

- **Universal Logic Capabilities**

  Ripple Blanking of Extraneous Zeros
  Latch Outputs Can Drive Logic Processors Simultaneously

  Decimal Point Driver Is Included

- **Synchronous BCD Counter Capability**

  Cascadable to N-Bits

  Look-Ahead-Enable Techniques Minimize Speed Degradation When Cascaded for Large-Word Display

  Direct Clear Input

N PACKAGE
(TOP VIEW)

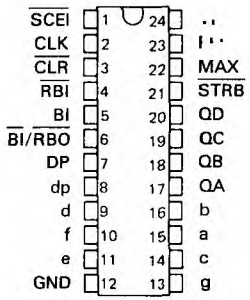

2

TTL Devices

logic symbol†

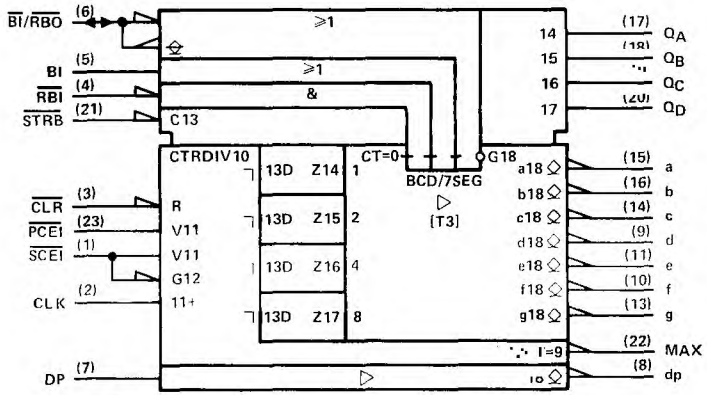

†This symbol is in accordance with ANSI/IEEE Std 91-1984 and IEC Publication 617-12.

description

This TTL MSI circuit contains the equivalent of 86 gates on a single chip. Logic inputs and outputs are completely TTL compatible. The buffered inputs are implemented with relatively large resistors in series with the bases of the input transistors to lower drive-current requirements to one-half of that required for a standard Series 54/74 TTL input. The serial-count-enable, actually two internal emitters, is rated as one standard Series 54/74 load. The logic outputs, except $\overline{RBO}$, have active pull-ups.

The SN74143 driver output is designed specifically to maintain a relatively constant on-level sink current of approximately 15 milliamperes from output "a" through "g" and seven milliamperes from output "dp" over a voltage range from one to five volts. Any number of LED's in series may be driven as long as the output voltage rating is not exceeded.

All inputs are diode-clamped to minimize transmission-line effects, thereby simplifying system design. Maximum clock frequency is typically 18 megahertz and power dissipation is typically 280 milliwatts. The SN74143 is characterized for operation from 0°C to 70°C.

PRODUCTION DATA documents contain information current as of publication date. Products conform to specifications per the terms of Texas Instruments standard warranty. Production processing does not necessarily include testing of all parameters.

description (continued)

Functions of the inputs and outputs of these devices are as follows:

FUNCTION	PIN NO.	DESCRIPTION
CLEAR INPUT	3	When low, resets and holds counter at 0. Must be high for normal counting.
CLOCK INPUT	2	Each positive-going transition will increment the counter provided that the circuit is in the normal counting mode (serial and parallel count enable inputs low, clear input high).
PARALLEL COUNT ENABLE INPUT (PCEI)	23	Must be low for normal counting mode. When high, counter will be inhibited. Logic level must not be changed when the clock is low.
SERIAL COUNT ENABLE INPUT (SCEI)	1	Must be low for normal counting mode, also must be low to enable maximum count output to go low. When high, counter will be inhibited and maximum count output will be driven high. Logic level must not be changed when the clock is low.
MAXIMUM COUNT OUTPUT	22	Will go low when the counter is at 9 and serial count enable input is low. Will return high when the counter changes to 0 and will remain high during counts 1 through 8. Will remain high (inhibited) as long as serial count enable input is high.
LATCH STROBE INPUT	21	When low, data in latches follow the data in the counter. When high, the data in the latches are held constant, and the counter may be operated independently.
LATCH OUTPUTS (Q_A, Q_B, Q_C, Q_D)	17, 18, 19, 20	The BCD data that drives the decoder can be stored in the 4-bit latch and is available at these outputs for driving other logic and/or processors. The binary weights of the outputs are: $Q_A = 1$, $Q_B = 2$, $Q_C = 4$, $Q_D = 8$.
DECIMAL POINT INPUT	7	Must be high to display decimal point. The decimal point is not displayed when this input is low or when the display is blanked.
BLANKING INPUT ($\overline{BI}$)	5	When high, will blank (turn off) the entire display and force $\overline{RBO}$ low. Must be low for normal display. May be pulsed to implement intensity control of the display.
RIPPLE-BLANKING INPUT ($\overline{RBI}$)	4	When the data in the latches is BCD 0, a low input will blank the entire display and force the $\overline{RBO}$ low. This input has no effect if the data in the latches is other than 0.
RIPPLE-BLANKING OUTPUT ($\overline{RBO}$)	6	Supplies ripple blanking information for the r blanking input of the next decade. Provides a low if $\overline{BI}$ is high, or if ' is low and the data in the latches in BCD 0; otherwise, this output is high. This pin has a resistive pull-up circuit suitable for performing a wire-AND function with any open-collector output. Whenever this pin is low the entire display will be blanked; therefore, this pin may be used as an active-low blanking input.
LED/LAMP DRIVER OUTPUTS (a, b, c, d, e, f, g, dp)	15, 16, 14, 9 11, 10, 13, 8	Outputs for driving seven-segment LED's or lamps and their decimal points. See segment identification and resultant displays on following page.

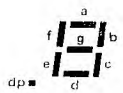

SEGMENT IDENTIFICATION

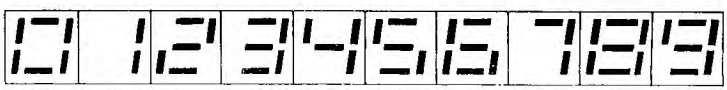

NUMERICAL DESIGNATIONS—RESULTANT DISPLAYS

logic diagram (positive logic)

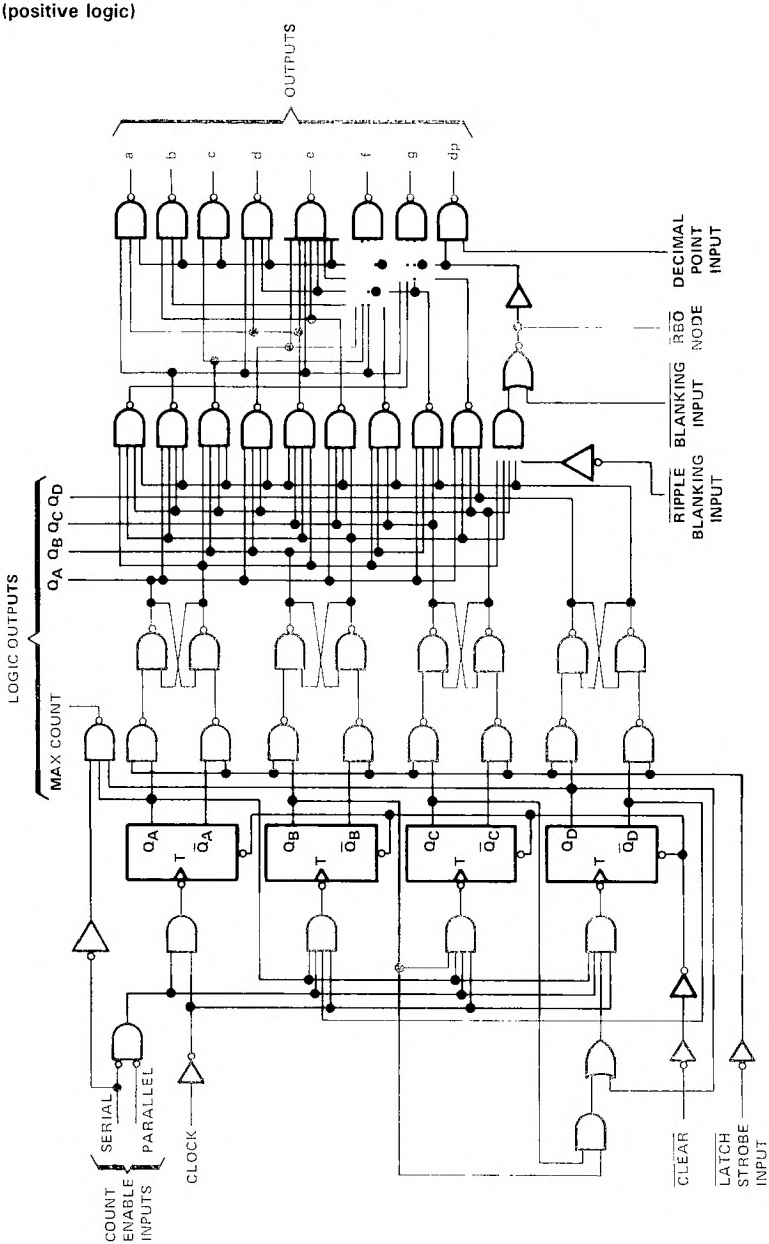

schematics of inputs and outputs

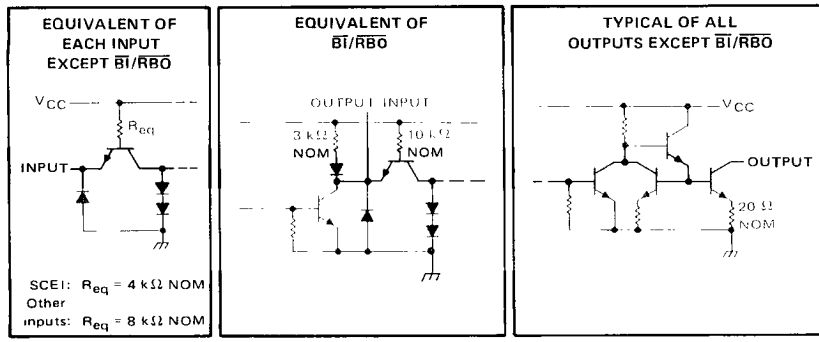

absolute maximum ratings over operating free-air temperature range (unless otherwise noted)

Supply voltage, V_{CC} (see Note 1) . . . . . 7 V
Input voltage . . . . . 5.5 V
Off-state current at outputs "a" thru "g" and "dp" . . . . . 250 μA
Continuous total power dissipation at (or below) 70°C free-air temperature (see Note 2) . . . . . 1.4 W
Operating free-air temperature range . . . . . 0°C to 70°C
Storage temperature range . . . . . −65°C to 150°C

NOTE 1: Voltage values are with respect to network ground terminal.

recommended operating conditions

		MIN	NOM	MAX	UNIT
Supply voltage, V_{CC}		4.75	5	5.25	V
On-state voltage at outputs a thru g and dp ('143 only)		1		5	V
High-level output current, I_{OH}	Q_A, Q_B, Q_C, Q_D			−240	μA
	num count			−560	
				−120	
Low-level output current, I_{OL}	Q_A, Q_B, Q_C, Q_D, $\overline{RBO}$			4.8	mA
	Maximum count			11.2	
Clock pulse width, $t_{w(clock)}$	High logic level	25			ns
	Low logic level	55			
Clear pulse width, $t_{w(clear)}$		25			ns
Setup time, t_{su}	Serial and parallel carry	30†			ns
	Clear inactive state	60†			
Operating free-air temperature, T_A		0		70	°C

† The arrow indicates that the rising edge of the clock pulse is used for reference

TEXAS INSTRUMENTS
POST OFFICE BOX 655012 • DALLAS, TEXAS 75265

electrical characteristics over recommended operating free-air temperature range (unless otherwise noted)

PARAMETER			TEST CONDITIONS†	MIN	TYP‡	MAX	UNIT
V_{IH}	High-level input voltage			2			V
V_{IL}	Low-level input voltage					0.8	V
V_{IK}	Input clamp voltage		V_{CC} = MIN, I_I = −12 mA			−1.5	V
V_{OH}	High-level output voltage	$\overline{RBO}$	V_{CC} = MIN, V_{IH} = 2 V, V_{IL} = 0.8 V, I_{OH} = MAX	2.4			V
		Q_A, Q_B, Q_C, Q_D					
		Maximum count					
V_{OL}	Low-level output voltage	Q_A, Q_B, Q_C, $\overline{RBO}$	V_{CC} = MIN, V_{IH} = 2 V, V_{IL} = 0.8 V, I_{OL} = MAX			0.4	V
		Maximum count					
$V_{O(off)}$	Off-state output voltage	Outputs a thru g, dp	V_{CC} = MAX, I_{OH} = 250 μA	7			V
$V_{O(on)}$	On-state output voltage	Outputs a thru g, dp	V_{CC} = MIN				V
$I_{O(on)}$	On-state output current	Outputs a thru g	V_{CC} = MIN, V_O = 1 V	9	15		mA
			V_{CC} = 5 V, V_O = 2 V		15		
			V_{CC} = MAX, V_O = 5 V		15	22	
		Output dp	V_{CC} = MIN, V_O = 1 V	4.5	7		
			V_{CC} = 5 V, V_O = 2 V		7		
			V_{CC} = MAX, V_O = 5 V		7	12	
I_I	Input current at maximum input voltage		V_{CC} = MAX, V_I = 5.5 V			1	mA
I_{IH}	High-level input current	' carry	V_{CC} = MAX, V_I = 2.4 V			40	μA
		' node		−0.12	−0.5		mA
		Other inputs				20	μA
I_{IL}	Low-level input current	Serial carry	V_{CC} = MAX, V_I = 0.4 V, See Note 3			−1.6	
		$\overline{RBO}$ node			−1.5	−2.4	mA
		Other inputs				−0.8	
I_{OS}	Short-circuit output current	Q_A, Q_B, Q_C, Q_D	V_{CC} = MAX	−9		−27.5	mA
		Maximum count		−15		−55	
I_{CC}	Supply current		V_{CC} = MAX, See Note 4		56	93	mA

† For conditions shown as MIN or MAX, use the appropriate value specified under recommended operating conditions for the applicable type.
‡ All typical values are at V_{CC} = 5 V, T_A = 25°C.

NOTES: 3. I_{IL} at $\overline{RBO}$ node is tested with $\overline{BI}$ grounded and RBI at 4.5 V.
4. I_{CC} is measured after the following conditions are established:
a) $\overline{Strobe}$ = $\overline{RBI}$ = DP = 4.5 V
b) Parallel count enable = serial count enable = $\overline{BI}$ = GND
c) Clear ( ) then clock until all outputs are on ( )
d) Outputs "a" through "g" and "dp" at 2.5 V, all other outputs open.

switching characteristics, V_{CC} = 5 V, T_A = 25°C

PARAMETER	FROM (INPUT)	TO (OUTPUT)	TEST CONDITIONS	MIN	TYP	MAX	UNIT
f_{max}				12	18		MHz
t_{PLH}	Serial look-ahead	Maximum count	C_L = 15 pF, R_L = 560 Ω, See Note 5		12	20	ns
t_{PHL}					23	35	
t_{PLH}	Clock	Maximum count			26	40	ns
t_{PHL}					29	45	
t_{PLH}	Clock	Q_A, Q_B, Q_C, Q_D	C_L = 15 pF, R_L = 1.2 kΩ,		28	45	ns
t_{PHL}							

TYPICAL APPLICATION DATA

This application demonstrates how the drivers may be cascaded for N-bit display applications. It features:

- Synchronous, look-ahead counting
- Ripple blanking of leading zeros; blanking of trailing zeros (not illustrated) can also be implemented
- Overriding blanking for total suppression or intensity modulation of display
- Direct parallel clear
- Latch strobe permits counter to acquire next display while viewing current display

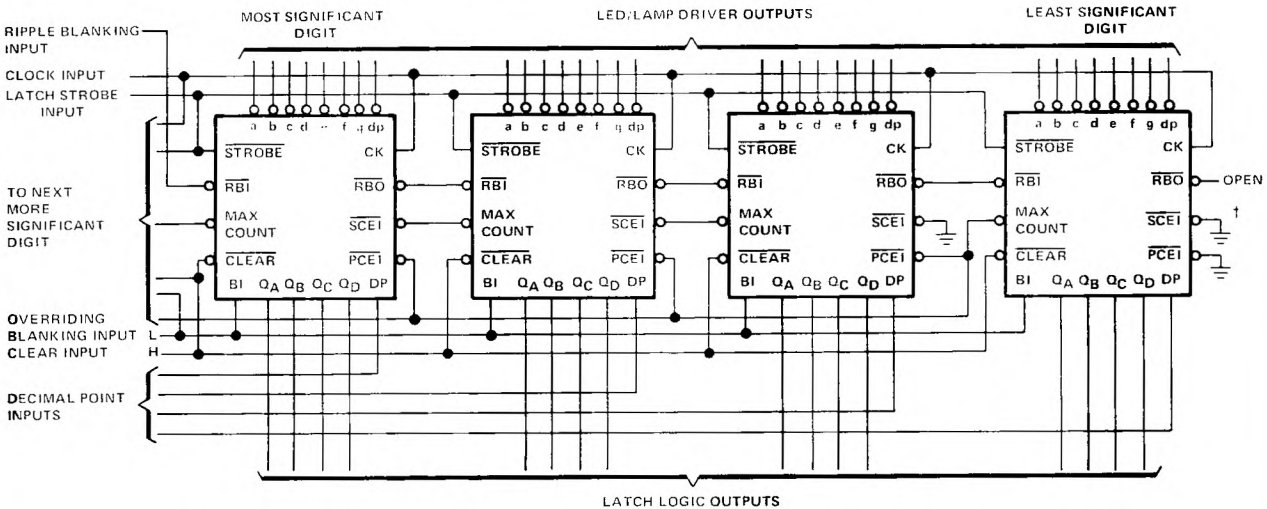

† The serial count-enable input of the least-significant digit is normally grounded, however, it may be used as a count-enable control for the entire counter (high to disable, low to count) provided the logic level on this pin is not changed while the clock line is low or false counting may result.

TEXAS INSTRUMENTS
POST OFFICE BOX 655012 • DALLAS, TEXAS 75265

FUNCTION TABLE

FUNCTION	CLOCK PULSE	INPUTS							$\overline{RBI}/\overline{RBO}$	OUTPUTS												TYPICAL DISPLAY	NOTES
		$\overline{CLEAR}$	$\overline{LT}$	$\overline{RBI}$	$\overline{BI}$	DECIMAL INPUT	SERIAL CARRY	PARALLEL CARRY		MAXIMUM COUNT OUTPUT	LATCH Q_D	Q_C	Q_B	Q_A	LED/LAMP DRIVERS a	b	c	d	e	f	g	dp		
Clear/Ripple Blank		L	L	L	X	X	X	X	L	H	L	L	L	L	OFF	OFF	OFF	OFF	OFF	OFF	OFF	OFF	None	A, E
Blank		H	L	X	H	X	X	X	L	H	L	L	L	L	OFF	OFF	OFF	OFF	OFF	OFF	OFF	OFF	None	A, D, E
Decimal	0	H	L	H	L	H	L	L	H	H	L	L	L	L	ON	ON	ON	ON	ON	ON	OFF	ON	0.	B
	1	H	L	H	L	L	L	L	H	H	L	L	L	H	OFF	ON	ON	OFF	OFF	OFF	OFF	OFF	1	B
	2	H	L	H	L	L	L	L	H	H	L	L	H	L	ON	ON	OFF	ON	ON	OFF	ON	OFF	2	B
	3	H	L	H	L	L	L	L	H	H	L	L	H	H	ON	ON	ON	ON	OFF	OFF	ON	OFF	3	B
	4	H	L	H	L	L	L	L	H	H	L	H	L	L	OFF	ON	ON	OFF	OFF	ON	ON	OFF	4	B
	5	H	L	H	L	L	L	L	H	H	L	H	L	H	ON	OFF	ON	ON	OFF	ON	ON	OFF	5	B
	6	H	L	H	L	L	L	L	H	H	L	H	H	L	ON	OFF	ON	ON	ON	ON	ON	OFF	6	B
	7	H	L	H	L	L	L	L	H	H	L	H	H	H	ON	ON	ON	OFF	OFF	OFF	OFF	OFF	7	B
	8	H	L	H	L	L	L	L	H	H	H	L	L	L	ON	ON	ON	ON	ON	ON	ON	OFF	8	B
	9	H	L	H	L	L	L	L	H	L	H	L	L	H	ON	ON	ON	ON	OFF	ON	ON	OFF	9	B
	0	H	L	H	L	L	L	L	H	H	L	L	L	L	ON	ON	ON	ON	ON	ON	OFF	OFF	0	B, C
	1	H	L	H	L	L	L	L	H	H	L	L	L	H	OFF	ON	ON	OFF	OFF	OFF	OFF	OFF	1	B
	2	H	L	H	L	L	L	L	H	H	L	L	H	L	ON	ON	OFF	ON	ON	OFF	ON	OFF	2	B
	3	H	L	H	L	L	L	L	H	H	L	L	H	H	ON	ON	ON	ON	OFF	OFF	ON	OFF	3	B
	4	H	L	H	L	L	L	L	H	H	L	H	L	L	OFF	ON	ON	OFF	OFF	ON	ON	OFF	4	B
	5	H	H	H	L	L	L	L	H	H	L	H	L	H	ON	OFF	ON	ON	OFF	ON	ON	OFF	5	B
Latch	6	H	H	H	L	L	L	L	H	H	L	H	L	H	ON	OFF	ON	ON	OFF	ON	ON	OFF	6	B
Latch	7	H	H	H	L	L	L	L	H	H	L	H	L	H	ON	OFF	ON	ON	OFF	ON	ON	OFF	7	B
	8	H	L	H	L	L	L	L	H	H	H	L	L	L	ON	ON	ON	ON	ON	ON	ON	OFF	8	B
	9	H	L	H	L	L	L	L	H	L	H	L	L	H	ON	ON	ON	ON	OFF	ON	ON	OFF	9	B
Ripple Blank	0	H	L	L	X	L	L	L	L	H	L	L	L	L	OFF	OFF	OFF	OFF	OFF	OFF	OFF	OFF	None	A, B, E

NOTES
A. $\overline{RBI}/\overline{RBO}$ is wire-AND logic serving as ripple blanking input ($\overline{RBI}$) and/or ripple blanking output ($\overline{RBO}$).
B. The blanking input ($\overline{BI}$) must be low when functions DECIMAL/0 through 20/RIPPLE BLANK are desired.
C. The ripple-blanking input ($\overline{RBI}$) must be open or high to display a zero during the decimal 0 input.
D. When a high logic level is applied directly to the blanking input ($\overline{BI}$) all segment outputs are off regardless of any other input condition.
E. When the ripple-blanking input ($\overline{RBI}$) and outputs Q_A through Q_D are at a low logic level, all segment outputs are off and the ripple-blanking output ($\overline{RBO}$) goes to a low logic level (response condition).

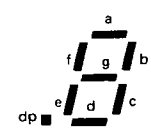

SEGMENT IDENTIFICATION

TEXAS INSTRUMENTS
POST OFFICE BOX 655012 • DALLAS, TEXAS 75265

MARCH 1974 – REVISED MARCH 1988

FOR USE AS LAMP, RELAY, OR MOS DRIVERS

- Full Decoding of Input Logic
- SN54145, SN74145, and SN74LS145 Have 80-mA Sink-Current Capability
- All Outputs Are Off for Invalid BCD Input Conditions
- Low Power Dissipation of 'LS145 . . . 35 mW Typical

SN54145, SN54LS145 . . . J OR W PACKAGE
SN74145 . . . N PACKAGE
SN74LS145 . . . D OR N PACKAGE
(TOP VIEW)

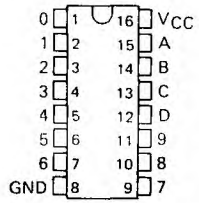

SN54LS145 FK PACKAGE
(TOP VIEW)

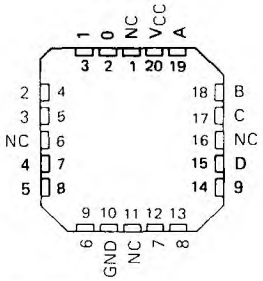

NC – No internal connection

FUNCTION TABLE

NO.	INPUTS				OUTPUTS									
	D	C	B	A	0	1	2	3	4	5	6	7	8	9
0	L	L	L	L	L	H	H	H	H	H	H	H	H	H
1	L	L	L	H	H	L	H	H	H	H	H	H	H	H
2	L	L	H	L	H	H	L	H	H	H	H	H	H	H
3	L	L	H	H	H	H	H	L	H	H	H	H	H	H
4	L	H	L	L	H	H	H	H	L	H	H	H	H	H
5	L	H	L	H	H	H	H	H	H	L	H	H	H	H
6	L	H	H	L	H	H	H	H	H	H	L	H	H	H
7	L	H	H	H	H	H	H	H	H	H	H	L	H	H
8	H	L	L	L	H	H	H	H	H	H	H	H	L	H
9	H	L	L	H	H	H	H	H	H	H	H	H	H	L
INVALID	H	L	H	L	H	H	H	H	H	H	H	H	H	H
	H	L	H	H	H	H	H	H	H	H	H	H	H	H
	H	H	L	L	H	H	H	H	H	H	H	H	H	H
	H	H	L	H	H	H	H	H	H	H	H	H	H	H
	H	H	H	L	H	H	H	H	H	H	H	H	H	H
	H	H	H	H	H	H	H	H	H	H	H	H	H	H

H = high level (off), L = low level (on)

description

These monolithic BCD-to-decimal decoder/drivers consist of eight inverters and ten four-input NAND gates. The inverters are connected in pairs to make BCD input data available for decoding by the NAND gates. Full decoding of valid BCD input logic ensures that all outputs remain off for all invalid binary input conditions. These decoders feature high-performance, n-p-n output transistors designed for use as indicator/relay drivers or as open-collector logic-circuit drivers. Each of the high-breakdown output transistors (15 volts) of the SN54145, SN74145, or SN74LS145 will sink up to 80 milliamperes of current. Each input is one Series 54/74 or Series 54LS/74LS standard load, respectively. Inputs and outputs are entirely compatible for use with TTL or DTL logic circuits, and the outputs are compatible for interfacing with most MOS integrated circuits. Power dissipation is typically 215 milliwatts for the '145 and 35 milliwatts for the 'LS145.

logic diagram

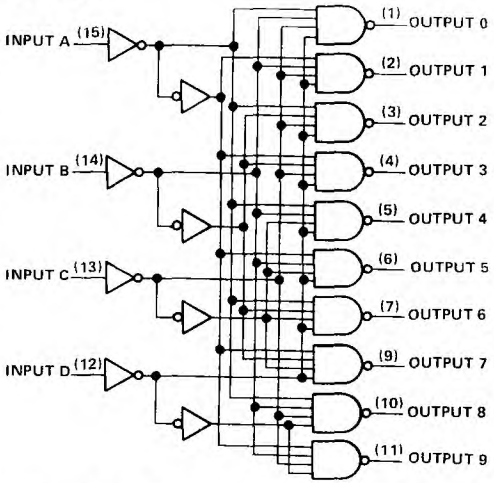

Pin numbers shown are for D, J, N, and W packages.

PRODUCTION DATA documents contain information current as of ... ...tion date. Products conform to specifications ... ... terms of Texas Instruments standard warranty. Production processing does not necessarily include testing of all parameters.

absolute maximum ratings over operating free-air temperature range (unless otherwise noted)

Supply voltage, V_{CC} (see Note 1) . . . . . 7 V
Input voltage . . . . . 5.5 V
Maximum current into any output (off-state) . . . . . 1 mA
Operating free-air temperature range: SN54145 . . . . . −55°C to 125°C
SN74145 . . . . . 0°C to 70°C
Storage temperature range . . . . . −65°C to 150°C

NOTE 1: Voltage values are with respect to network ground terminal

recommended operating conditions

	SN54145			SN74145			UNIT
	MIN	NOM	MAX	MIN	NOM	MAX	
Supply voltage,	4.5	5	5.5	4.75	5	5.25	V
Off-state output voltage, $V_{O(off)}$			15			15	V
Operating free-air temperature, T_A	−55		125	0		70	°C

electrical characteristics over recommended operating free-air temperature range (unless otherwise noted)

PARAMETER		TEST CONDITIONS†		MIN	TYP‡	MAX	UNIT
V_{IH}	High-level input voltage			2			V
V_{IL}	Low-level input voltage					0.8	V
V_{IK}	Input clamp voltage	V_{CC} = MIN, I_I = −12 mA				−1.5	V
$I_{O(off)}$	Off-state output current	V_{CC} = MIN, V_{IH} = 2 V, V_{IL} = 0.8 V, $V_{O(off)}$ = 15 V				250	µA
$V_{O(on)}$	On-state output voltage	V_{CC} = MIN, V_{IH} = 2 V, V_{IL} = 0.8 V	$I_{O(on)}$ = 80 mA		0.5	0.9	V
			$I_{O(on)}$ = 20 mA			0.4	
I_I	Input current at maximum input voltage	V_{CC} = MAX, V_I = 5.5 V				1	mA
I_{IH}	High-level input current	V_{CC} = MAX, V_I = 2.4 V				40	µA
I_{IL}	Low-level input current	V_{CC} = MAX, V_I = 0.4 V				−1.6	mA
I_{CC}	Supply current	V_{CC} = MAX, See Note 2	SN54145		43	62	mA
			SN74145		43	70	

†For conditions shown as MIN or MAX, use the appropriate value specified under recommended operating conditions.
‡All typical values are at V_{CC} = 5 V, T_A = 25°C.
NOTE 2: I_{CC} is measured with all inputs grounded and outputs open.

switching characteristics, V_{CC} = 5 V, T_A = 25°C

PARAMETER		TEST CONDITIONS	MIN	MAX	UNIT
t_{PLH}	Propagation delay time, low-to-high-level output	C_L = 15 pF, R_L = 100 Ω, See Note 3		50	ns
t_{PHL}	Propagation delay time, high-to-low-level output			50	ns

NOTE 3: Load circuits and voltage waveforms are shown in Section 1.

schematics of inputs and outputs

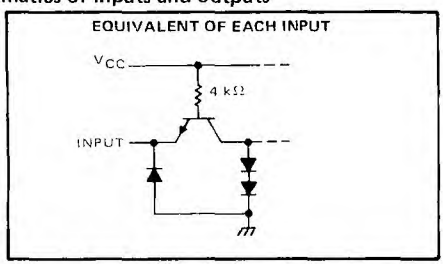

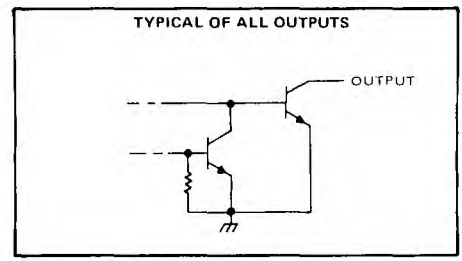

TEXAS INSTRUMENTS
POST OFFICE BOX 655012 • DALLAS, TEXAS 75265

absolute maximum ratings over operating free-air temperature range (unless otherwise noted)

Supply voltage, V_{CC} (see Note 1) . . . . . 7 V
Input voltage . . . . . 7 V
Operating free-air temperature range: SN54LS145 . . . . . −55°C to 125°C
SN74LS145 . . . . . 0°C to 70°C
Storage temperature range . . . . . −65°C to 150°C

NOTE 1: Voltage values are with respect to network ground terminal.

recommended operating conditions

	SN54LS145			SN74LS145			UNIT
	MIN	NOM	MAX	MIN	NOM	MAX	
Supply voltage, V_{CC}	4.5	5	5.5	4.75	5	5.25	V
Off-state output voltage, $V_{O(off)}$			15			15	V
Operating free-air temperature, T_A	−55		125	0		70	°C

electrical characteristics over recommended operating free-air temperature range (unless otherwise noted)

PARAMETER		TEST CONDITIONS†		SN54LS145			SN74LS145			UNIT
				MIN	TYP‡	MAX	MIN	TYP‡	MAX	
V_{IH}	High-level input voltage			2			2			V
V_{IL}	Low-level input voltage					0.7			0.8	V
V_{IK}	Input clamp voltage	V_{CC} = MIN,	I_I = −18 mA			−1.5			−1.5	V
$I_{O(off)}$	Off-state output current	V_{CC} = MIN, V_{IL} = V_{IL} max,	V_{IH} = 2 V, V_{OH} = 15 V			250			250	μA
$V_{O(on)}$	On-state output voltage	V_{CC} = MIN, V_{IH} = 2 V, V_{IL} = V_{IL} max	I_{OL} = 12 mA		0.25	0.4		0.25	0.4	V
			I_{OL} = 24 mA					0.35	0.5	
			I_{OL} = 80 mA					2.3	3	
I_I	Input current at maximum input voltage	V_{CC} = MAX,	V_I = 7 V			0.1			0.1	mA
I_{IH}	High-level input current	V_{CC} = MAX,	V_I = 2.7 V			20			20	μA
I_{IL}	Low-level input current	V_{CC} = MAX,	V_I = 0.4 V			−0.4			−0.4	mA
I_{CC}	Supply current	V_{CC} = MAX,	See Note 2		7	13		7	13	mA

†For conditions shown as MIN or MAX, use the appropriate value specified under recommended operating conditions.
‡All typical values are at V_{CC} = 5 V, T_A = 25°C.
NOTE 2: I_{CC} is measured with all inputs grounded and outputs open.

switching characteristics, V_{CC} = 5 V, T_A = 25°C

PARAMETER		TEST CONDITIONS	MIN	MAX	UNIT
t_{PLH}	Propagation delay time, low-to-high-level output	C_L = 45 pF, R_L = 665 Ω, See Note 3		50	ns
t_{PHL}	Propagation delay time, high-to-low-level output			50	ns

NOTE 3: Load circuits and voltage waveforms are shown in Section 1.

schematic of inputs and outputs

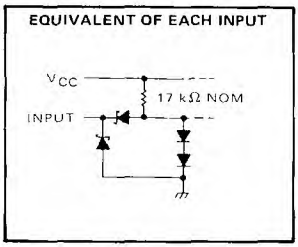

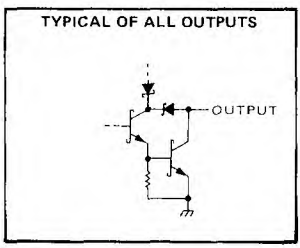

'147, 'LS147

- Encodes 10-Line Decimal to 4-Line BCD
- Applications Include:

  Keyboard Encoding
  Range Selection: '148, 'LS148

- Encodes 8 Data Lines to 3-Line Binary (Octal)
- Applications Include:

  N-Bit Encoding
  Code Converters and Generators

TYPE	TYPICAL DATA DELAY	TYPICAL POWER DISSIPATION
'147	10 ns	225 mW
'148	10 ns	190 mW
'LS147	15 ns	60 mW
'LS148	15 ns	60 mW

SN54147, SN54LS147,
SN54148, SN54LS148 . . . J OR W PACKAGE
SN74147, SN74148 . . . N PACKAGE
SN74LS147, SN74LS148 . . . D OR N PACKAGE
(TOP VIEW)

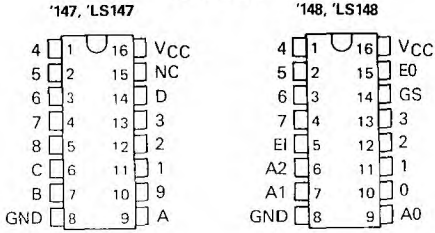

SN54LS147, SN54LS148 . . . FK PACKAGE
(TOP VIEW)

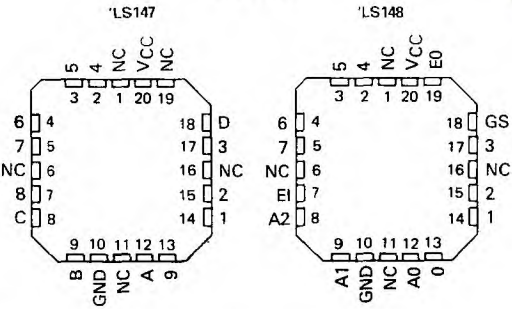

NC – No internal connection

description

These TTL encoders feature priority decoding of the inputs to ensure that only the highest-order data line is encoded. The '147 and 'LS147 encode nine data lines to four-line (8-4-2-1) BCD. The implied decimal zero condition requires no input condition as zero is encoded when all nine data lines are at a high logic level. The '148 and 'LS148 encode eight data lines to three-line (4-2-1) binary (octal). Cascading circuitry (enable input EI and enable output EO) has been provided to allow octal expansion without the need for external circuitry. For all types, data inputs and outputs are active at the low logic level. All inputs are buffered to represent one normalized Series 54/74 or 54LS/74LS load, respectively.

'147, 'LS147
FUNCTION TABLE

INPUTS									OUTPUTS			
1	2	3	4	5	6	7	8	9	D	C	B	A
H	H	H	H	H	H	H	H	H	H	H	H	H
X	X	X	X	X	X	X	X	L	L	H	H	L
X	X	X	X	X	X	X	L	H	L	H	H	H
X	X	X	X	X	X	L	H	H	H	L	L	L
X	X	X	X	X	L	H	H	H	H	L	L	H
X	X	X	X	L	H	H	H	H	H	L	H	L
X	X	X	L	H	H	H	H	H	H	L	H	H
X	X	L	H	H	H	H	H	H	H	H	L	L
X	L	H	H	H	H	H	H	H	H	H	L	H
L	H	H	H	H	H	H	H	H	H	H	H	L

H = high logic level, L = low logic level, X = irrelevant

'148, 'LS148
FUNCTION TABLE

INPUTS									OUTPUTS				
EI	0	1	2	3	4	5	6	7	A2	A1	A0	GS	EO
H	X	X	X	X	X	X	X	X	H	H	H	H	H
L	H	H	H	H	H	H	H	H	H	H	H	H	L
L	X	X	X	X	X	X	X	L	L	L	L	L	H
L	X	X	X	X	X	X	L	H	L	L	H	L	H
L	X	X	X	X	X	L	H	H	L	H	L	L	H
L	X	X	X	X	L	H	H	H	L	H	H	L	H
L	X	X	X	L	H	H	H	H	H	L	L	L	H
L	X	X	L	H	H	H	H	H	H	L	H	L	H
L	X	L	H	H	H	H	H	H	H	H	L	L	H
L	L	H	H	H	H	H	H	H	H	H	H	L	H

PRODUCTION DATA documents contain information current as of publication date. Products conform to specifications per the terms of Texas Instruments standard warranty. Production processing does not necessarily include testing of all parameters.

logic symbols†

'147, 'LS147

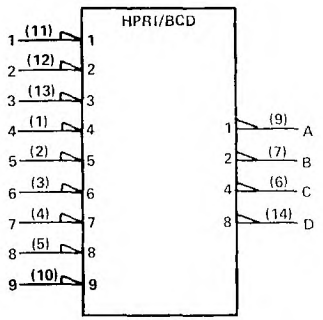

'148, 'LS148

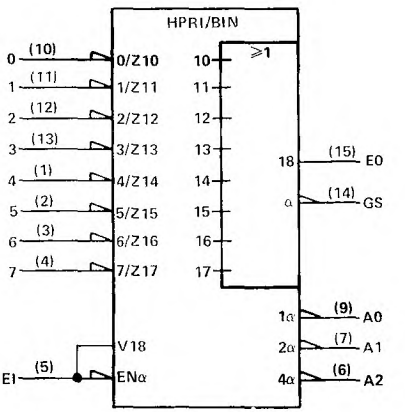

†These symbols are in accordance with ANSI/IEEE Std. 91-1984 and IEC Publication 617-12.

Pin numbers shown are for D, J, N, and W packages

logic diagrams

'147, 'LS147

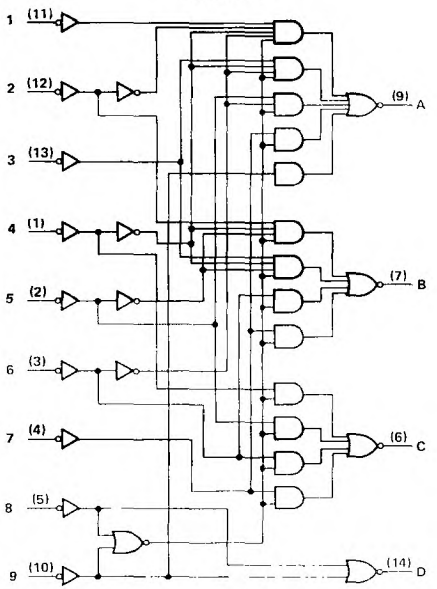

'148, 'LS148

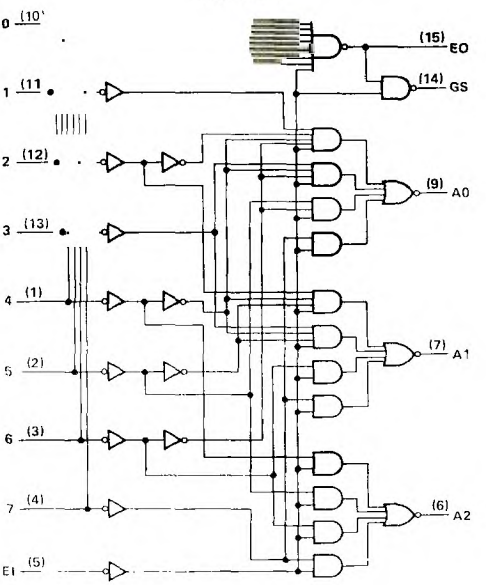

Pin numbers shown are for D, J, N, and W packages.

schematics of inputs and outputs

'147, '148

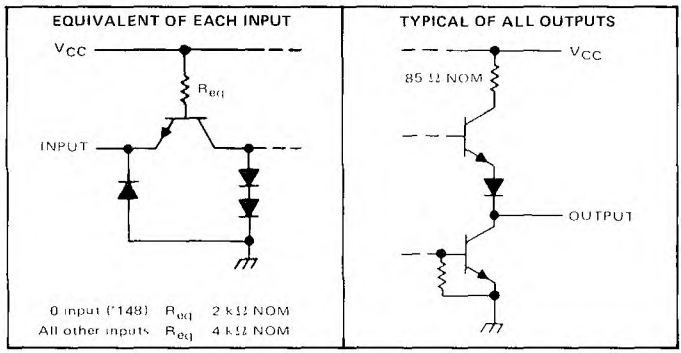

'LS147, 'LS148

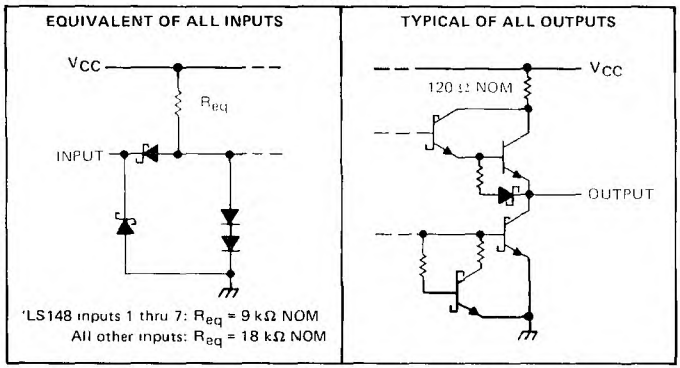

absolute maximum ratings over operating free-air temperature range (unless otherwise noted)

Supply voltage, V_{CC} (see Note 1) . . . . . 7 V
Input voltage: '147, '148 . . . . . 5.5 V
'LS147, 'LS148 . . . . . 7 V
Interemitter voltage: '148 only (see Note 2) . . . . . 5.5 V
Operating free-air temperature range: SN54', SN54LS Circuits . . . . . −55°C to 125°C
SN74', SN74LS Circuits . . . . . 0°C to 70°C
Storage temperature range . . . . . −65°C to 150°C

NOTES: 1. Voltage values, except interemitter voltage, are with respect to network ground terminal
2. This is the voltage between two emitters of a multiple-emitter transistor. For '148 circuits, this rating applies between any two of the eight data lines, 0 through 7.

recommended operating conditions

	SN54'			SN74'			SN54LS'			SN74LS'			UNIT
	MIN	NOM	MAX	MIN	NOM	MAX	MIN	NOM	MAX	MIN	NOM	MAX	
Supply voltage, V_{CC}	4.5	5	5.5	4.75	5	5.25	4.5	5	5.5	4.75	5	5.25	V
High-level output current, I_{OH}			−800			−800			−400			−400	μA
Low-level output current, I_{OL}			16			16			4			8	mA
Operating free-air temperature, T_A	−55		125	0		70	−55		125	0		70	°C

electrical characteristics over recommended operating free-air temperature range (unless otherwise noted)

PARAMETER			TEST CONDITIONS†	'147 MIN	'147 TYP‡	'147 MAX	'148 MIN	'148 TYP‡	'148 MAX	UNIT
V_{IH}	High-level input voltage			2			2			V
V_{IL}	Low-level input voltage					0.8			0.8	V
V_{IK}	Input clamp voltage		V_{CC} = MIN, I_I = −12 mA			−1.5			−1.5	V
V_{OH}	High-level output voltage		V_{CC} = MIN, V_{IH} = 2 V, V_{IL} = 0.8 V, I_{OH} = −800 μA	2.4	3.3		2.4	3.3		V
V_{OL}	Low-level output voltage		V_{CC} = MIN, V_{IH} = 2 V, V_{IL} = 0.8 V, I_{OL} = 16 mA		0.2	0.4		0.2	0.4	V
I_I	Input current at maximum input voltage		V_{CC} = MAX, V_I = 5.5 V			1			1	mA
I_{IH}	High-level input current	0 input	V_{CC} = MAX, V_I = 2.4 V						40	μA
		Any input except 0				40			80	
I_{IL}	Low-level input current	0 input	V_{CC} = MAX, V_I = 0.4 V						−1.6	mA
		Any input except 0				−1.6			−3.2	
I_{OS}	Short-circuit output current§		V_{CC} = MAX	−35		−85	−35		−85	mA
I_{CC}	Supply current		V_{CC} = MAX, See Note 3	Condition 1	50	70		40	60	mA
				Condition 2	42	62		35	55	mA

NOTE 3: For '147, I_{CC} (condition 1) is measured with input 7 grounded, other inputs and outputs open; I_{CC} (condition 2) is measured with all inputs and outputs open. For '148, I_{CC} (condition 1) is measured with inputs 7 and EI grounded, other inputs and outputs open, I_{CC} (condition 2) is measured with all inputs and outputs open.

†For conditions shown as MIN or MAX, use the appropriate value specified under recommended operating conditions.

‡All typical values are at V_{CC} = 5 V, T_A = 25°C.

§Not more than one output should be shorted at a time.

SN54147, SN74147 switching characteristics, V_{CC} = 5 V, T_A = 25°C

PARAMETER¶	FROM (INPUT)	TO (OUTPUT)	WAVEFORM	TEST CONDITIONS	MIN	TYP	MAX	UNIT
t_{PLH}	Any	Any	In-phase output	C_L = 15 pF, R_L = 400 Ω, See Note 4		9	14	ns
t_{PHL}						7	11	
t_{PLH}	Any	Any	Out-of-phase output			13	19	ns
t_{PHL}						12	19	

SN54148, SN74148 switching characteristics, V_{CC} = 5 V, T_A = 25°C

PARAMETER¶	FROM (INPUT)	TO (OUTPUT)	WAVEFORM	TEST CONDITIONS	MIN	TYP	MAX	UNIT
t_{PLH}	1 thru 7	A0, A1, or A2	In-phase output	C_L = 15 pF, R_L = 400 Ω, See Note 4		10	15	ns
t_{PHL}						9	14	
t_{PLH}	1 thru 7	A0, A1, or A2	Out-of-phase output			13	19	ns
t_{PHL}						12	19	
t_{PLH}	0 thru 7	EO	Out-of-phase output			6	10	ns
t_{PHL}						14	25	
t_{PLH}	0 thru 7	GS	In-phase output			18	30	ns
t_{PHL}						14	25	
t_{PLH}	EI	A0, A1, or A2	In-phase output			10	15	ns
t_{PHL}						10	15	
t_{PLH}	EI	GS	In-phase output			8	12	ns
t_{PHL}						10	15	
t_{PLH}	EI	EO	In-phase output			10	15	ns
t_{PHL}						17	30	

¶t_{PLH} = propagation delay time, low-to-high-level output
t_{PHL} = propagation delay time, high-to-low-level output
NOTE 4. Load circuits and voltage waveforms are shown in Section 1.

TEXAS INSTRUMENTS
POST OFFICE BOX 655012 • DALLAS, TEXAS 75265

electrical characteristics over recommended operating free-air temperature range (unless otherwise noted)

PARAMETER			TEST CONDITIONS†		SN54LS' MIN	SN54LS' TYP‡	SN54LS' MAX	SN74LS' MIN	SN74LS' TYP‡	SN74LS' MAX	UNIT
V_{IH}	High-level input voltage				2			2			V
V_{IL}	Low-level input voltage						0.7			0.8	V
V_{IK}	Input clamp voltage		V_{CC} = MIN,	I_I = −18 mA			−1.5			−1.5	V
V_{OH}	High-level output voltage		V_{CC} = MIN, V_{IL} = 0.8 V,	V_{IH} = 2 V, I_{OH} = −400 μA	2.5	3.4		2.7	3.4		V
V_{OL}	Low-level output voltage		V_{CC} = MIN, V_{IH} = 2 V,	I_{OL} = 4 mA		0.25	0.4		0.25	0.4	V
			V_{IL} = V_{IL}max	I_{OL} = 8 mA					0.35	0.5	
I_I	Input current at maximum input voltage	'LS148 inputs 1 thru 7	V_{CC} = MAX,	V_I = 7 V			0.2			0.2	mA
		All other inputs					0.1			[illegible]	
I_{IH}	High-level input current	'LS148 inputs 1 thru 7	V_{CC} = MAX,	V_I = 2.7 V			40			[illegible]	μA
		All other inputs					20			20	
I_{IL}	Low-level input current	'LS148 inputs 1 thru 7	V_{CC} = MAX,	V_I = 0.4 V			−0.8			−0.8	mA
		All other inputs					−0.4			−0.4	
I_{OS}	Short-circuit output current§		V_{CC} = MAX		−20		−100	−20		−100	mA
I_{CC}	Supply current		V_{CC} = MAX, See Note 5	Condition 1		12	20		12	20	mA
				Condition 2		10	17		10	17	mA

NOTE 5: For 'LS147, I_{CC} (condition 1) is measured with input 7 grounded, other inputs and outputs open; I_{CC} (condition 2) is measured with all inputs and outputs open. For 'LS148, I_{CC} (condition 1) is measured with inputs 7 and EI grounded, other inputs and outputs open, I_{CC} (condition 2) is measured with all inputs and outputs open.

†For conditions shown as MIN or MAX, use the appropriate value specified under recommended operating conditions.

‡All typical values are at V_{CC} = 5 V, T_A = 25°C.

§Not more than one output should be shorted at a time.

SN54LS147, SN74LS147 switching characteristics, V_{CC} = 5 V, T_A = 25°C

PARAMETER¶	FROM (INPUT)	TO (OUTPUT)	WAVEFORM	TEST CONDITIONS	MIN	TYP	MAX	UNIT
t_{PLH}	Any	Any	In-phase output	C_L = 15 pF, R_L = 2 kΩ, See Note 4		12	18	ns
t_{PHL}						12	18	
t_{PLH}	Any	Any	Out-of-phase output			21	33	ns
t_{PHL}						15	23	

SN54LS148, SN74LS148 switching characteristics, V_{CC} = 5 V, T_A = 25°C

PARAMETER¶	FROM (INPUT)	TO (OUTPUT)	WAVEFORM	TEST CONDITIONS	MIN	TYP	MAX	UNIT
t_{PLH}	1 thru 7	A0, A1, or A2	In-phase output	C_L = 15 pF, R_L = 2 kΩ, See Note 4		14	18	ns
t_{PHL}						15	25	
t_{PLH}	1 thru 7	A0, A1, or A2	Out-of-phase output			20	36	ns
t_{PHL}						16	29	
t_{PLH}	0 thru 7	EO	Out-of-phase output			7	18	ns
t_{PHL}						25	40	
t_{PLH}	0 thru 7	GS	In-phase output			35	55	ns
t_{PHL}						9	21	
t_{PLH}	EI	A0, A1, or A2	In-phase output			16	25	ns
t_{PHL}						12	25	
t_{PLH}	EI	GS	In-phase output			12	17	ns
t_{PHL}						14	36	
t_{PLH}	EI	EO	In-phase output			12	21	ns
t_{PHL}						23	35	

¶t_{PLH} = propagation delay time, low to high level output
t_{PHL} = propagation delay time, high to low level output

NOTE 4: Load circuits and voltage waveforms are shown in Section 1.

TYPICAL APPLICATION DATA

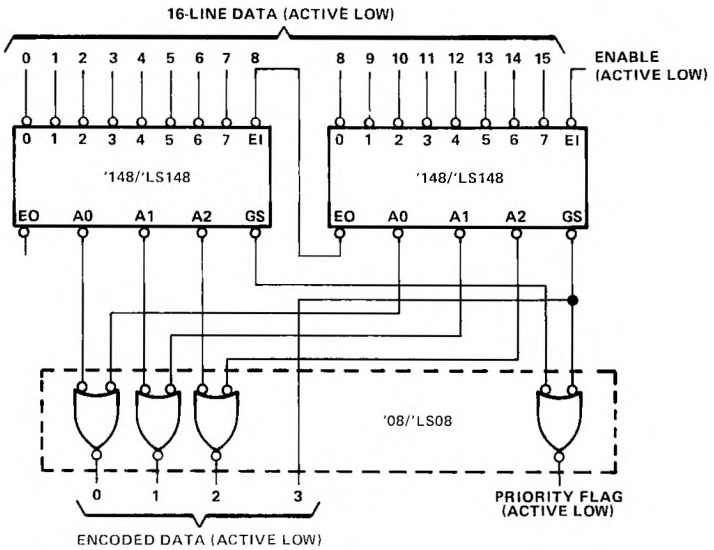

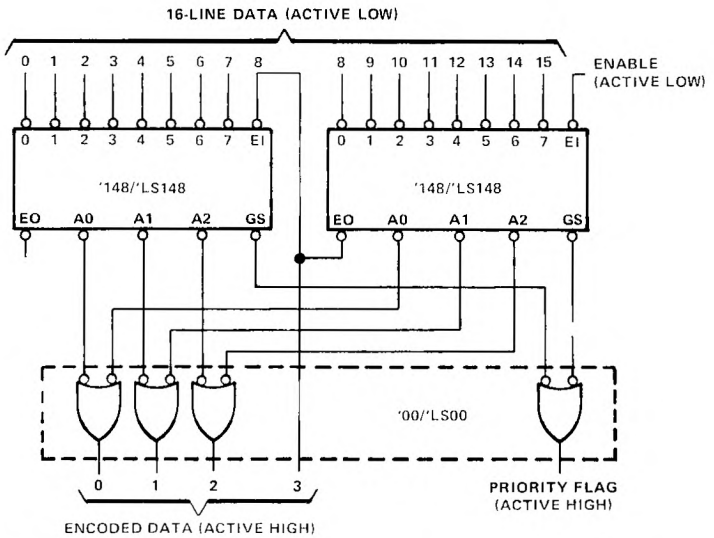

Since the '147/'LS147 and '148/'LS148 are combinational logic circuits, wrong addresses can appear during input transients. Moreover, for the '148/'LS148 a change from high to low at input EI can cause a transient low on the GS output when all inputs are high. This must be considered when strobing the outputs.

TEXAS INSTRUMENTS
POST OFFICE BOX 655012 • DALLAS, TEXAS 75265

- '150 Selects One-of-Sixteen Data Sources
- Others Select One-of-Eight Data Sources
- All Perform Parallel-to-Serial Conversion
- All Permit Multiplexing from N Lines to One Line
- Also For Use as Boolean Function Generator
- Input-Clamping Diodes Simplify System Design
- Fully Compatible with Most TTL Circuits

TYPE	TYPICAL AVERAGE PROPAGATION DELAY TIME DATA INPUT TO W OUTPUT	TYPICAL POWER DISSIPATION
'150	13 ns	200 mW
'151A	8 ns	145 mW
'LS151	13 ns	30 mW
'S151	4.5 ns	225 mW

description

These monolithic data selectors/multiplexers contain full on-chip binary decoding to select the desired data source. The '150 selects one-of-sixteen data sources; the '151A, 'LS151, and 'S151 select one-of-eight data sources. The '150, '151A, 'LS151, and 'S151 have a strobe input which must be at a low logic level to enable these devices. A high level at the strobe forces the W output high, and the Y output (as applicable) low.

The '150 has only an inverted W output; the '151A, 'LS151, and 'S151 feature complementary W and Y outputs.

The '151A and '152A incorporate address buffers that have symmetrical propagation delay times through the complementary paths. This reduces the possibility of transients occurring at the output(s) due to changes made at the select inputs, even when the '151A outputs are enabled (i.e., strobe low).

SN54150 . . . J OR W PACKAGE
SN74150 . . . N PACKAGE
(TOP VIEW)

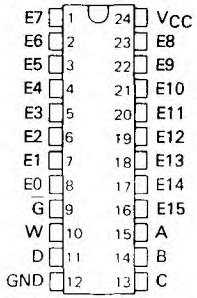

SN54151A, SN54LS151, SN54S151 . . . J OR W PACKAGE
SN74151A . . . N PACKAGE
SN74LS151, SN74S151 . . . D OR N PACKAGE
(TOP VIEW)

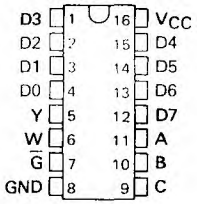

SN54LS151, SN54S151 . . . FK PACKAGE
(TOP VIEW)

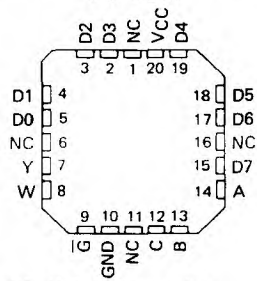

NC - No internal connection

PRODUCTION DATA documents contain information current as of publication date. Products conform to specifications per the terms of Texas Instruments standard warranty. Production processing does not necessarily include testing of all parameters.

logic symbols†

'150

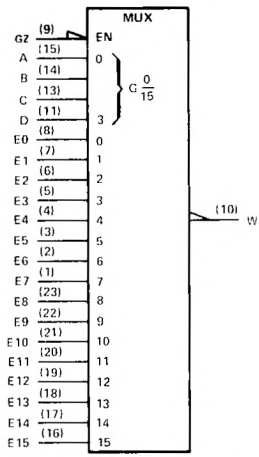

'151A, 'LS151, 'S151

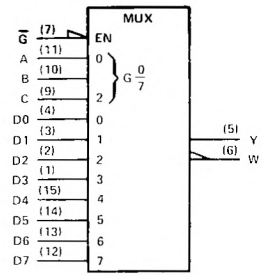

†These symbols are in accordance with ANSI/IEEE Std. 91-1984 and IEC Publication 617-12.
Pin numbers shown are D, J, N, and W packages.

'150

FUNCTION TABLE

INPUTS					OUTPUT
SELECT				STROBE	
D	C	B	A	$\overline{G}$	W
X	X	X	X	H	H
L	L	L	L	L	$\overline{E0}$
L	L	L	H	L	$\overline{E1}$
L	L	H	L	L	$\overline{E2}$
L	L	H	H	L	$\overline{E3}$
L	H	L	L	L	$\overline{E4}$
L	H	L	H	L	$\overline{E5}$
L	H	H	L	L	$\overline{E6}$
L	H	H	H	L	$\overline{E7}$
H	L	L	L	L	$\overline{E8}$
H	L	L	H	L	$\overline{E9}$
H	L	H	L	L	$\overline{E10}$
H	L	H	H	L	$\overline{E11}$
H	H	L	L	L	$\overline{E12}$
H	H	L	H	L	$\overline{E13}$
H	H	H	L	L	$\overline{E14}$
H	H	H	H	L	$\overline{E15}$

'151A, 'LS151, 'S151

FUNCTION TABLE

INPUTS				OUTPUTS	
SELECT			STROBE		
C	B	A	$\overline{G}$	Y	W
X	X	X	H	L	H
L	L	L	L	D0	$\overline{D0}$
L	L	H	L	D1	$\overline{D1}$
L	H	L	L	D2	$\overline{D2}$
L	H	H	L	D3	$\overline{D3}$
H	L	L	L	D4	$\overline{D4}$
H	L	H	L	D5	$\overline{D5}$
H	H	L	L	D6	$\overline{D6}$
H	H	H	L	D7	$\overline{D7}$

H = high level, L = low level, X = irrelevant
$\overline{E0}$, $\overline{E1}$ . . . $\overline{E7}$ = the complement of the level of the respective E input
D0, D1 . . . D7 = the level of the D respective input

TEXAS INSTRUMENTS
POST OFFICE BOX 655012 • DALLAS, TEXAS 75265

schematics of inputs and outputs

EQUIVALENT OF EACH INPUT OF '150

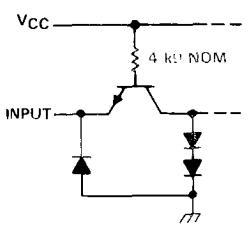

EQUIVALENT OF EACH INPUT OF '151A

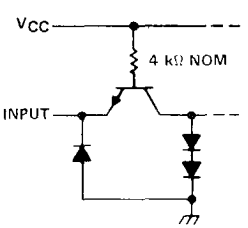

EQUIVALENT OF EACH INPUT OF 'LS151

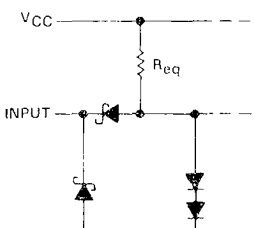

Data select and strobe R_{eq} = 20 kΩ NOM
Data inputs R_{eq} = 17 kΩ NOM

EQUIVALENT OF EACH INPUT OF 'S151

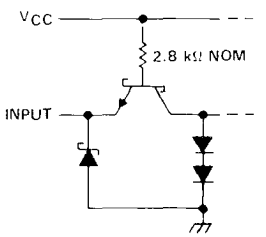

TYPICAL OF ALL OUTPUTS OF '150, '151A

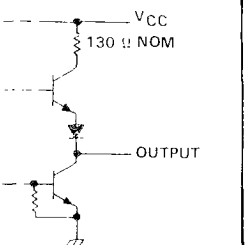

TYPICAL OF ALL OUTPUTS OF 'LS151

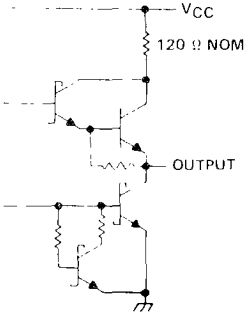

TYPICAL OF ALL OUTPUTS OF 'S151

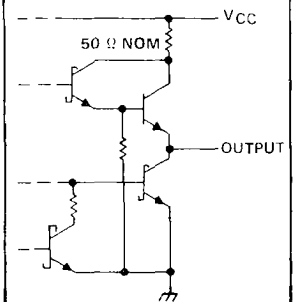

logic diagrams (positive logic)

'150

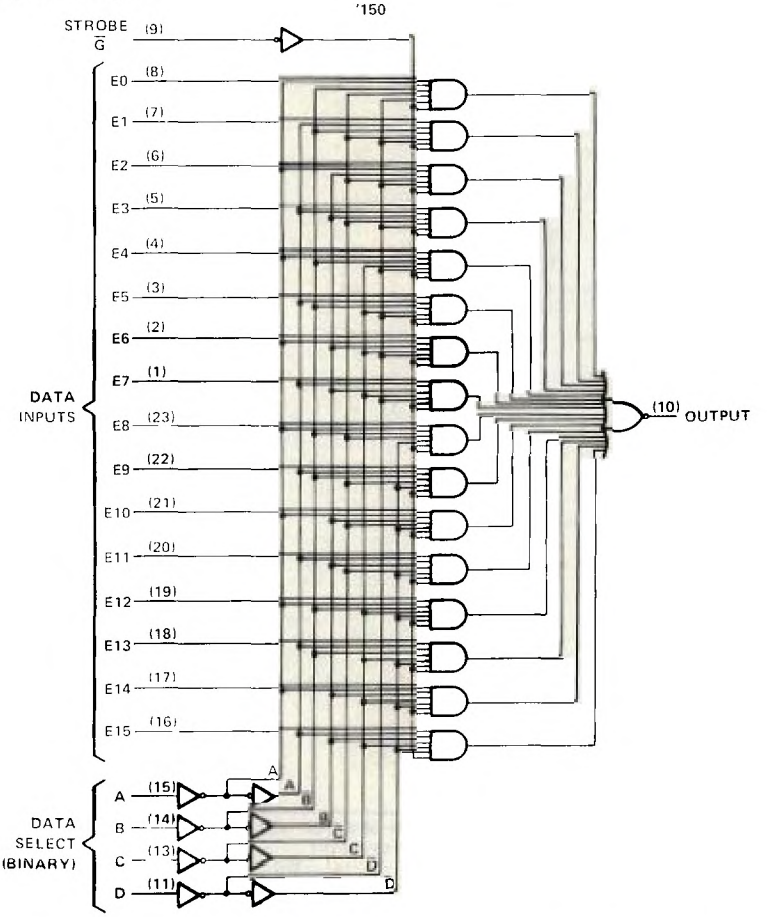

ADDRESS BUFFERS FOR '151A

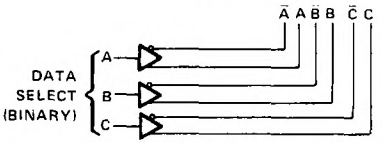

ADDRESS BUFFERS FOR 'LS151, 'S151

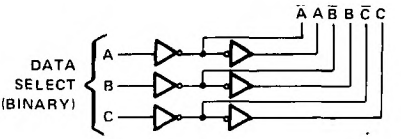

Pin numbers shown are for D, J, N, and W packages

TEXAS INSTRUMENTS
POST OFFICE BOX 655012 • DALLAS, TEXAS 75265

'151A, 'LS151, 'S151

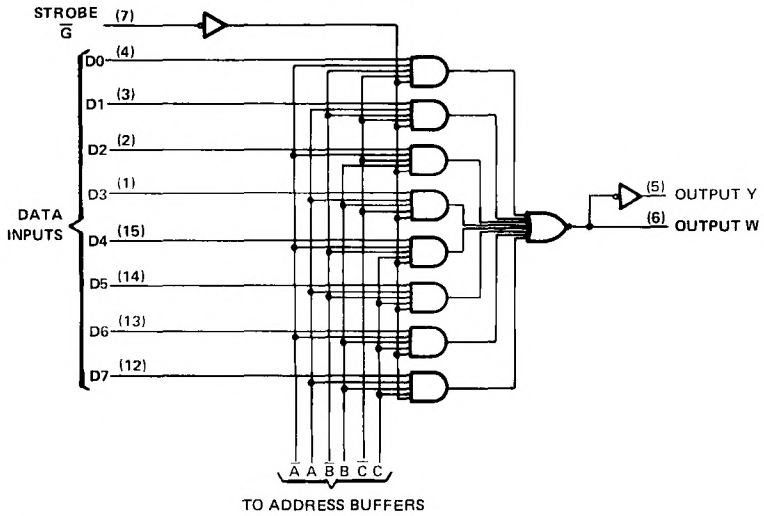

absolute maximum ratings over operating free-air temperature range (unless otherwise noted)

Supply voltage, V_{CC} (see Note 1) . . . . . 7 V
Input voltage (see Note 2): '150, '151A, 'S151 . . . . . 5.5 V
'LS151 . . . . . 7 V
Operating free-air temperature range: SN54' . . . . . −55°C to 125°C
SN74' . . . . . 0°C to 70°C
Storage temperature range . . . . . **−65°C to 150°C**

NOTES: 1: Voltage values are with respect to network ground terminal.
2. For the '150, input voltages must be zero or positive with respect to network ground terminal

recommended operating conditions

	SN54'			SN74'			UNIT
	MIN	NOM	MAX	MIN	NOM	MAX	
Supply voltage, V_{CC}	4.5	5	5.5	4.75	5	5.25	V
High-level output current, I_{OH}			−800			−800	μA
Low-level output current, I_{OL}			16			16	mA
Operating free-air temperature, T_A	−55		125	0		70	°C

electrical characteristics over recommended operating free-air temperature range (unless otherwise noted)

PARAMETER		TEST CONDITIONS†		'150			'151A			UNIT
				MIN	TYP‡	MAX	MIN	TYP‡	MAX	
V_{IH}	High-level input voltage			2			2			V
V_{IL}	Low-level input voltage					0.8			0.8	V
V_{IK}	Input clamp voltage	V_{CC} = MIN, I_I = −8 mA				−1.5			−1.5	V
V_{OH}	High-level output voltage	V_{CC} = MIN, V_{IH} = 2 V, V_{IL} = 0.8 V, I_{OH} = −800 μA		2.4	3.4		2.4	3.4		V
V_{OL}	Low-level output voltage	V_{CC} = MIN, V_{IH} = 2 V, V_{IL} = 0.8 V, I_{OL} = 16 mA			0.2	0.4		0.2	0.4	V
I_I	Input current at maximum input voltage	V_{CC} = MAX, V_I = 5.5 V				1			1	mA
I_{IH}	High-level input current	V_{CC} = MAX, V_I = 2.4 V				40			40	μA
I_{IL}	Low-level input current	V_{CC} = MAX, V_I = 0.4 V				−1.6			−1.6	mA
I_{OS}	Short-circuit output current§	V_{CC} = MAX	SN54'	−20		−55	−20		−55	mA
			SN74'	−18		−55	−18		−55	
I_{CC}	Supply current	V_{CC} = MAX, See Note 3			40	68		29	48	mA

† For conditions shown as MIN or MAX, use the appropriate value specified under recommended operating conditions for the applicable device type.
‡ All typical values at V_{CC} = 5 V, T_A = 25°C.
§ Not more than one output of the '151A should be shorted at a time.
NOTE 3: I_{CC} is measured with the strobe and data select inputs at 4.5 V, all other inputs and outputs open.

switching characteristics, V_{CC} = 5 V, T_A = 25°C

PARAMETER¶	FROM (INPUT)	TO (OUTPUT)	TEST CONDITIONS	'150			'151A			UNIT
				MIN	TYP	MAX	MIN	TYP	MAX	
t_{PLH}	A, B, or C (4 levels)	Y	C_L = 15 pF, R_L = 400 Ω, See Note 4					25	38	ns
t_{PHL}								25	38	
t_{PLH}	A, B, C, or D (3 levels)	W			23	35		17	26	ns
t_{PHL}					22	33		19	30	
t_{PLH}	Strobe $\overline{G}$	Y						21	33	ns
t_{PHL}								22	33	
t_{PLH}	Strobe $\overline{G}$	W			15.5	24		14	21	ns
t_{PHL}					21	30		15	23	
t_{PLH}	D0 thru D7	Y						13	20	ns
t_{PHL}								18	27	
t_{PLH}	E0 thru E15, or D0 thru D7	W			8.5	14		8	14	ns
t_{PHL}					13	20		8	14	

¶ t_{PLH} = propagation delay time, low-to-high-level output
t_{PHL} = propagation delay time, high-to-low-level output
NOTE 4: Load circuits and voltage waveforms are shown in Section 1.

TEXAS INSTRUMENTS
POST OFFICE BOX 655012 • DALLAS, TEXAS 75265

recommended operating conditions

	SN54LS151			SN74LS151			UNIT
	MIN	NOM	MAX	MIN	NOM	MAX	
Supply voltage, V_{CC}	4.5	5	5.5	4.75	5	5.25	V
High-level output current, I_{OH}			−400			−400	μA
Low-level output current, I_{OL}			4			8	mA
Operating free-air temperature, T_A	−55		125	0		70	°C

electrical characteristics over recommended operating free-air temperature range (unless otherwise noted)

PARAMETER		TEST CONDITIONS†		SN54LS151			SN74LS151			UNIT
				MIN	TYP‡	MAX	MIN	TYP‡	MAX	
V_{IH}	High-level input voltage			2			2			V
V_{IL}	Low-level input voltage					0.7			0.8	V
V_{IK}	Input clamp voltage	V_{CC} = MIN, I_I = −18 mA				−1.5			−1.5	V
V_{OH}	High-level output voltage	V_{CC} = MIN, V_{IH} = 2 V, V_{IL} = V_{IL}max, I_{OH} = −400 μA		2.5	3.4		2.7	3.4		V
V_{OL}	Low-level output voltage	V_{CC} = MIN, V_{IH} = 2 V, V_{IL} = V_{IL}max	I_{OL} = 4 mA		0.25	0.4		0.25	0.4	V
			I_{OL} = 8 mA					0.35	0.5	
I_I	Input current at maximum input voltage	V_{CC} = MAX, V_I = 7 V				0.1			0.1	mA
I_{IH}	High-level input current	V_{CC} = MAX, V_I = 2.7 V				20			20	μA
I_{IL}	Low-level input current	V_{CC} = MAX, V_I = 0.4 V				−0.4			−0.4	mA
I_{OS}	Short-circuit output current§	V_{CC} = MAX		−20		−100	−20		−100	mA
I_{CC}	Supply current	V_{CC} = MAX, Outputs open, All inputs at 4.5 V			6.0	10		6.0	10	mA

† For conditions shown as MIN or MAX, use the appropriate value specified under recommended operating conditions for the applicable device type.
‡ All typical values are at V_{CC} = 5 V, T_A = 25°C.
§ Not more than one output should be shorted at a time and duration of short-circuit should not exceed one second.

switching characteristics, V_{CC} = 5 V, T_A 25°C

PARAMETER¶	FROM (INPUT)	TO (OUTPUT)	TEST CONDITIONS	MIN	TYP	MAX	UNIT
t_{PLH}	A, B, or C (4 levels)	Y	C_L = 15 pF, R_L = 2 kΩ, See Note 4		27	43	ns
t_{PHL}					18	30	
t_{PLH}	A, B, or C (3 levels)	W			14	23	ns
t_{PHL}					20	32	
t_{PLH}	Strobe $\overline{G}$	Y			26	42	ns
t_{PHL}					20	32	
t_{PLH}	Strobe $\overline{G}$	W			15	24	ns
t_{PHL}					18	30	
t_{PLH}	Any D	Y			20	32	ns
t_{PHL}					16	26	
t_{PLH}	Any D	W			13	21	ns
t_{PHL}					12	20	

¶ t_{PLH} = propagation delay time, low-to-high-level output
t_{PHL} = propagation delay time, high-to-low-level output
NOTE 4: Load circuits and voltage waveforms are shown in Section 1

recommended operating conditions

	SN54S151			SN74S151			UNIT
	MIN	NOM	MAX	MIN	NOM	MAX	
Supply voltage, V_{CC}	4.5	5	5.5	4.75	5	5.25	V
High-level output current, I_{OH}			−1			−1	mA
Low-level output current, I_{OL}			20			20	mA
Operating free-air temperature, T_A	−55		125	0		70	°C

electrical characteristics over recommended operating free-air temperature range (unless otherwise noted)

PARAMETER		TEST CONDITIONS†		MIN	TYP‡	MAX	UNIT
V_{IH}	High-level input voltage			2			V
V_{IL}	Low-level input voltage					0.8	V
V_{IK}	Input clamp voltage	V_{CC} = MIN, I_I = −18 mA				−1.2	V
V_{OH}	High-level output voltage	V_{CC} = MIN, V_{IH} = 2 V, V_{IL} = 0.8 V, I_{OH} = −1 mA	SN54S151	2.5	3.4		V
			SN74S151	2.7	3.4		
V_{OL}	Low-level output voltage	V_{CC} = MIN, V_{IH} = 2 V, V_{IL} = 0.8 V, I_{OL} = 20 mA				0.5	V
I_I	Input current at maximum input voltage	V_{CC} = MAX, V_I = 5.5 V				1	mA
I_{IH}	High-level input current	V_{CC} = MAX, V_I = 2.7 V				50	μA
I_{IL}	Low-level input current	V_{CC} = MAX, V_I = 0.5 V				−2	mA
I_{OS}	Short-circuit output current§	V_{CC} = MAX		−40		−100	mA
I_{CC}	Supply current	V_{CC} = MAX, All inputs at 4.5 V, All outputs open			45	70	mA

† For conditions shown as MIN or MAX, use the appropriate value specified under recommended operating conditions for the applicable device type.
‡ All typical values are at V_{CC} = 5 V, T_A = 25°C.
§ Not more than one output should be shorted at a time, and duration of the short-circuit should not exceed one second.

switching characteristics, V_{CC} = 5 V, T_A 25°C

PARAMETER¶	FROM (INPUT)	TO (OUTPUT)	TEST CONDITIONS	MIN	TYP	MAX	UNIT
t_{PLH}	A, B, or C (4 levels)	Y	C_L = 15 pF, R_L = 280 kΩ, See Note 4		12	18	ns
t_{PHL}					12	18	
t_{PLH}	A, B, or C (3 levels)	W			10	15	ns
t_{PHL}					9	13.5	
t_{PLH}	Any D	Y			8	12	ns
t_{PHL}					8	12	
t_{PLH}	Any D	W			4.5	7	ns
t_{PHL}					4.5	7	
t_{PLH}	Strobe $\overline{G}$	Y			11	16.5	ns
t_{PHL}					12	18	
t_{PLH}	Strobe $\overline{G}$	W			9	13	ns
t_{PHL}					8.5	12	

¶ t_{PLH} = propagation delay time, low-to-high-level output
t_{PHL} = propagation delay time, high-to-low-level output
NOTE 4: Load circuits and voltage waveforms are shown in Section 1.

TEXAS INSTRUMENTS
POST OFFICE BOX 655012 • DALLAS, TEXAS 75265

- Permits Multiplexing from N lines to 1 line
- Performs Parallel-to-Serial Conversion
- Strobe (Enable) Line Provided for Cascading (N lines to n lines)
- High-Fan-Out, Low-Impedance, Totem-Pole Outputs
- Fully Compatible with most TTL Circuits

TYPE	TYPICAL AVERAGE PROPAGATION DELAY TIMES FROM DATA	FROM STROBE	FROM SELECT	TYPICAL POWER DISSIPATION
'153	14 ns	17 ns	22 ns	180 mW
'LS153	14 ns	19 ns	22 ns	31 mW
'S153	6 ns	9.5 ns	12 ns	225 mW

SN54153, SN54LS153, SN54S153 . . . J OR W PACKAGE
SN74153 . . . N PACKAGE
SN74LS153, SN74S153 . . . D OR N PACKAGE
(TOP VIEW)

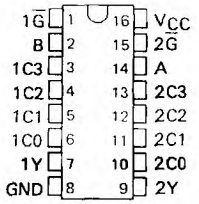

SN54LS153, SN54S153 . . . FK PACKAGE
(TOP VIEW)

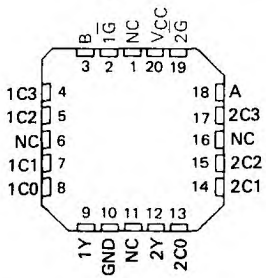

NC – No internal connection

description

Each of these monolithic, data selectors/multiplexers contains inverters and drivers to supply fully complementary, on-chip, binary decoding data selection to the AND-OR gates. Separate strobe inputs are provided for each of the two four-line sections.

FUNCTION TABLE

SELECT INPUTS		DATA INPUTS				STROBE	OUTPUT
B	A	C0	C1	C2	C3	G̅	Y
X	X	X	X	X	X	H	L
L	L	L	X	X	X	L	L
L	L	H	X	X	X	L	H
L	H	X	L	X	X	L	L
L	H	X	H	X	X	L	H
H	L	X	X	L	X	L	L
H	L	X	X	H	X	L	H
H	H	X	X	X	L	L	L
H	H	X	X	X	H	L	H

Select inputs A and B are common to both sections.
H = high level, L = low level, X = irrelevant

absolute maximum ratings over operating free-air temperature range (unless otherwise noted)

Supply voltage, V_{CC} (See Note 1) . . . . . 7 V
Input voltage: '153, 'S153 . . . . . 5.5 V
'LS153 . . . . . 7 V
Operating free-air temperature range: SN54' . . . . . −55°C to 125°C
SN74' . . . . . 0°C to 70°C
Storage temperature range . . . . . −65°C to 150°C

NOTE 1: Voltage values are with respect to network ground terminal.

PRODUCTION DATA documents contain information current as of publication date. Products conform to specifications per the terms of Texas Instruments standard warranty. Production processing does not necessarily include testing of all parameters.

logic symbol†

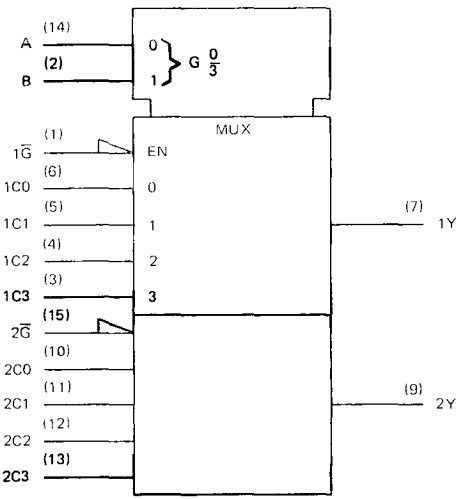

†This symbol is in accordance with ANSI/IEEE Std. 91-1984 and IEC Publication 617-12.

logic diagrams (positive logic)

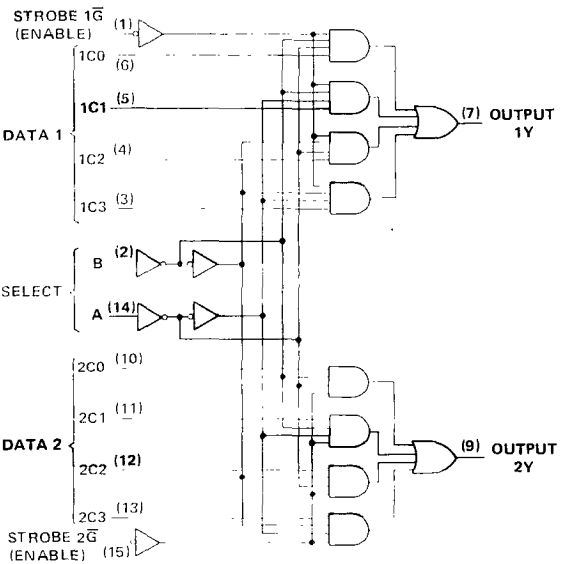

Pin numbers shown are for D, J, N, and W packages

TEXAS INSTRUMENTS
POST OFFICE BOX 655012 • DALLAS, TEXAS 75265

schematics of inputs and outputs

EQUIVALENT OF INPUTS OF '153

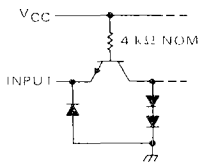

EQUIVALENT OF INPUTS OF 'S153

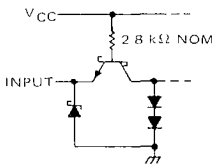

EQUIVALENT OF $1\overline{G}$, $2\overline{G}$ INPUTS OF LS153

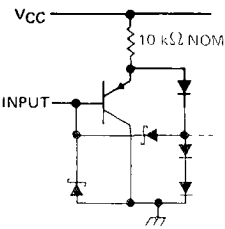

EQUIVALENT OF ALL OTHER INPUTS OF 'LS153

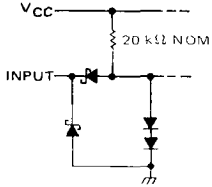

TYPICAL OF OUTPUTS OF '153

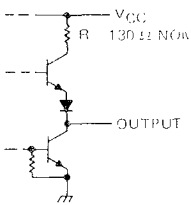

TYPICAL OF OUTPUTS OF 'LS153

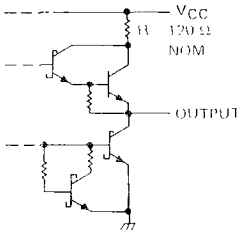

TYPICAL OF OUTPUTS OF 'S153

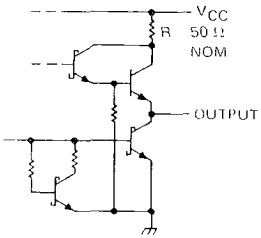

recommended operating conditions

	SN54153			SN74153			UNIT
	MIN	NOM	MAX	MIN	NOM	MAX	
Supply voltage, V_{CC}	4.5	5	5.5	4.75	5	5.25	V
High-level output current, I_{OH}			−800			−800	μA
Low-level output current, I_{OL}			16			16	mA
Operating free-air temperature, T_A	−55		125	0		70	°C

electrical characteristics over recommended operating free-air temperature range (unless otherwise noted)

PARAMETER		TEST CONDITIONS†	SN54153			SN74153			UNIT
			MIN	TYP‡	MAX	MIN	TYP‡	MAX	
V_{IH}	High-level input voltage		2			2			V
V_{IL}	Low-level input voltage				0.8			0.8	V
V_{IK}	Input clamp voltage	V_{CC} = MIN, I_I = −12 mA			−1.5			−1.5	V
V_{OH}	High-level output voltage	V_{CC} = MIN, V_{IH} = 2 V, V_{IL} = 0.8 V, I_{OH} = −800 μA	2.4	3.4		2.4	3.4		V
V_{OL}	Low-level output voltage	V_{CC} = MIN, V_{IH} = 2 V, V_{IL} = 0.8 V, I_{OL} = 16 mA		0.2	0.4		0.2	0.4	V
I_I	Input current at maximum input voltage	V_{CC} = MAX, V_I = 5.5 V			1			1	mA
I_{IH}	High-level input current	V_{CC} = MAX, V_I = 2.4 V			40			40	μA
I_{IL}	Low-level input current	V_{CC} = MAX, V_I = 0.4 V			−1.6			−1.6	mA
I_{OS}	Short-circuit output current§	V_{CC} = MAX	−20		−55	−18		−57	mA
I_{CCL}	Supply current, output low	V_{CC} = MAX, See Note 2		36	52		36	60	mA

†For conditions shown as MIN or MAX, use the appropriate value specified under recommended operating conditions.
‡All typical values are at V_{CC} = 5 V, T_A = 25°C.
§Not more than one output should be shorted at a time.
NOTE 2: I_{CCL} is measured with the outputs open and all inputs grounded.

switching characteristics, V_{CC} = 5 V, T_A = 25°C

PARAMETER¶	FROM (INPUT)	TO (OUTPUT)	TEST CONDITIONS	MIN	TYP	MAX	UNIT
t_{PLH}	Data	Y	C_L = 30 pF, R_L = 400 Ω, See Note 3		12	18	ns
t_{PHL}	Data	Y			15	23	ns
t_{PLH}	Select	Y			22	34	ns
t_{PHL}	Select	Y			22	34	ns
t_{PLH}	Strobe $\overline{G}$	Y			19	30	ns
t_{PHL}	Strobe $\overline{G}$	Y			15	23	ns

¶t_{PLH} = propagation delay time, low-to-high-level output
t_{PHL} = propagation delay time, high-to-low-level output
NOTE 3: Load circuits and voltage waveforms are shown in Section 1.

TEXAS INSTRUMENTS
POST OFFICE BOX 655012 • DALLAS, TEXAS 75265

recommended operating conditions

		SN54LS153			SN74LS153			UNIT
		MIN	NOM	MAX	MIN	NOM	MAX	
V_{CC}	Supply voltage	4.5	5	5.5	4.75	5	5.25	V
V_{IH}	High-level input voltage	2			2			V
V_{IL}	Low-level input voltage			0.7			0.8	V
I_{OH}	High-level output current			−0.4			−0.4	mA
I_{OL}	Low-level output current			4			8	mA
T_A	Operating free-air temperature	−55		125	0		70	°C

electrical characteristics over recommended operating free-air temperature range (unless otherwise noted)

PARAMETER	TEST CONDITIONS†		SN54LS153			SN74LS153			UNIT
			MIN	TYP‡	MAX	MIN	TYP‡	MAX	
V_{IK}	V_{CC} = MIN, I_I = −18 mA				−1.5			−1.5	V
V_{OH}	V_{CC} = MIN, V_{IH} = 2 V, V_{IL} = MAX, I_{OH} = −0.4 mA		2.5	3.4		2.7	3.4		V
V_{OL}	V_{CC} = MIN, V_{IH} = 2 V, V_{IL} = MAX,	I_{OL} = 4 mA		0.25	0.4		0.25	0.4	V
		I_{OL} = 8 mA					0.35	0.5	
I_I	V_{CC} = MAX, V_I = 7 V				0.1			0.1	mA
I_{IH}	V_{CC} = MAX, V_I = 2.7 V				20			20	μA
I_{IL}	$\overline{1G}$, $\overline{2G}$	V_{CC} = MAX, V_I = 0.4 V			−0.2			−0.2	mA
	All other				−0.4			−0.4	
I_{OS}§	V_{CC} = MAX		−20		−100	−20		−100	mA
I_{CCL}	V_{CC} = MAX, See Note 2			6.2	10		6.2	10	mA

† For conditions shown as MIN or MAX, use the appropriate value specified under recommended operating conditions.
‡ All typical values are at V_{CC} = 5 V, T_A = 25°C.
§ Not more than one output should be shorted at a time.
NOTE 2: I_{CCL} is measured with the outputs open and all inputs grounded

switching characteristics, V_{CC} = 5 V, T_A = 25°C

PARAMETER¶	FROM (INPUT)	TO (OUTPUT)	TEST CONDITIONS	MIN	TYP	MAX	UNIT
t_{PLH}	Data	Y	C_L = 15 pF, R_L = 2 kΩ, See Note 3		10	15	ns
t_{PHL}	Data	Y			17	26	ns
t_{PLH}	Select	Y			19	29	ns
t_{PHL}	Select	Y			25	38	ns
t_{PLH}	Strobe $\overline{G}$	Y			16	24	ns
t_{PHL}	Strobe $\overline{G}$	Y			21	32	ns

¶ t_{PLH} = propagation delay time, low-to-high-level output
t_{PHL} = propagation delay time, high-to-low-level output
NOTE 3: Load circuits and voltage waveforms are shown in Section 1.

recommended operating conditions

	SN54S153			SN74S153			UNIT
	MIN	NOM	MAX	MIN	NOM	MAX	
Supply voltage, V_{CC}	4.5	5	5.5	4.75	5	5.25	V
High-level output current, I_{OH}			−1			−1	mA
Low-level output current, I_{OL}			20			20	mA
Operating free-air temperature, T_A	−55		125	0		70	°C

electrical characteristics over recommended operating free-air temperature range (unless otherwise noted)

PARAMETER		TEST CONDITIONS†		MIN	TYP‡	MAX	UNIT
V_{IH}	High-level input voltage			2			V
V_{IL}	Low-level input voltage					0.8	V
V_{IK}	Input clamp voltage	V_{CC} = MIN, I_I = −18 mA				−1.2	V
V_{OH}	High-level output voltage	V_{CC} = MIN, V_{IH} = 2 V, V_{IL} = 0.8 V, I_{OH} = −1 mA	Series 54S	2.5	3.4		V
			Series 74S	2.7	3.4		
V_{OL}	Low-level output voltage	V_{CC} = MIN, V_{IH} = 2 V, V_{IL} = 0.8 V, I_{OL} = 20 mA				0.5	V
I_I	Input current at maximum input voltage	V_{CC} = MAX, V_I = 5.5 V				1	mA
I_{IH}	High-level input current	V_{CC} = MAX, V_I = 2.7 V				50	μA
I_{IL}	Low-level input current	V_{CC} = MAX, V_I = 0.5 V				−2	mA
I_{OS}	Short-circuit output current§	V_{CC} = MAX		−40		−100	mA
I_{CCL}	Supply current, low-level output	V_{CC} = MAX, See Note 2			45	70	mA

† For conditions shown as MIN or MAX, use the appropriate value specified under recommended operating conditions.
‡ All typical values are at V_{CC} = 5 V, T_A = 25°C.
§ Not more than one output should be shorted at a time and duration of short-circuit should not exceed one second.
NOTE 2: I_{CCL} is measured with the outputs open and all inputs grounded.

switching characteristics, V_{CC} = 5 V, T_A = 25°C

PARAMETER¶	FROM (INPUT)	TO (OUTPUT)	TEST CONDITIONS	MIN	TYP	MAX	UNIT
t_{PLH}	Data	Y	C_L = 15 pF, R_L = 280 Ω, See Note 3		6	9	ns
t_{PHL}	Data	Y			6	9	ns
t_{PLH}	Select	Y			11.5	18	ns
t_{PHL}	Select	Y			12	18	ns
t_{PLH}	Strobe $\overline{G}$	Y			10	15	ns
t_{PHL}	Strobe $\overline{G}$	Y			9	13.5	ns

¶ t_{PLH} = propagation delay time, low-to-high-level output
t_{PHL} = propagation delay time, high-to-low-level output
NOTE 3: Load circuits and voltage waveforms are shown in Section 1.

TEXAS INSTRUMENTS
POST OFFICE BOX 225012 • DALLAS, TEXAS 75265

DECEMBER 1972 – REVISED MARCH 88

- **'154 is Ideal for High-Performance Memory Decoding**
- **Decodes 4 Binary-Coded Inputs into One of 16 Mutually Exclusive Outputs**
- **Performs the Demultiplexing Function by Distributing Data From One Input Line to Any One of 16 Outputs**
- **Input Clamping Diodes Simplify System Design**
- **High Fan-Out, Low-Impedance, Totem-Pole Outputs**
- **Fully Compatible with Most TTL and MSI Circuits**

TYPICAL AVERAGE PROPAGATION DELAY		TYPICAL POWER DISSIPATION
3 LEVELS OF LOGIC	STROBE	
23 ns	19 ns	170 mW

SN54154 . . . J OR W PACKAGE
SN74154 . . . N PACKAGE
(TOP VIEW)

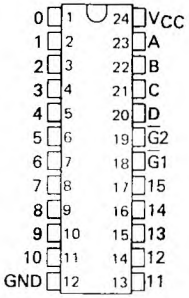

description

Each of these monolithic, 4-line-to-16-line decoders utilizes TTL circuitry to decode four binary-coded inputs into one of sixteen mutually exclusive outputs when both the strobe inputs, $\overline{G1}$ and $\overline{G2}$, are low. The demultiplexing function is performed by using the 4 input lines to address the output line, passing data from one of the strobe inputs with the other strobe input low. When either strobe input is high, all outputs are high. These demultiplexers are ideally suited for implementing high-performance memory decoders. For ultra-high [illegible]d systems, SN54S138/SN74S138 and [illegible]4S139/SN74S139 are recommended.

These circuits are fully compatible for use with most other TTL circuits. All inputs are buffered and input clamping diodes are provided to minimize transmission-line effects and thereby simplify system design.

The SN54154 is characterized for operation over the full military temperature range of −55°C to 125°C. The SN74154 is characterized for operation from 0°C to 70°C.

logic symbols (alternatives)†

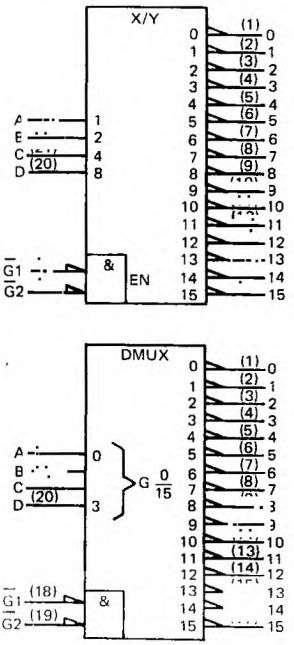

†These symbols are in accordance with ANSI/IEEE Std. 91-1984 and IEC Publication 617-12

PRODUCTION DATA documents contain information current as of publication date. Products conform to specifications per the terms of Texas Instruments standard warranty. Production processing does not necessarily include testing of all parameters.

FUNCTION TABLE

INPUTS						OUTPUTS														
$\overline{G}1$	$\overline{G}2$	D	C	B	A	0	1	2	3	4	5	6	7	8	9	10	11	12	13	14	15
L	L	L	L	L	L	L	H	H	H	H	H	H	H	H	H	H	H	H	H	H	H
L	L	L	L	L	H	H	L	H	H	H	H	H	H	H	H	H	H	H	H	H	H
L	L	L	L	H	L	H	H	L	H	H	H	H	H	H	H	H	H	H	H	H	H
L	L	L	L	H	H	H	H	H	L	H	H	H	H	H	H	H	H	H	H	H	H
L	L	L	H	L	L	H	H	H	H	L	H	H	H	H	H	H	H	H	H	H	H
L	L	L	H	L	H	H	H	H	H	H	L	H	H	H	H	H	H	H	H	H	H
L	L	L	H	H	L	H	H	H	H	H	H	L	H	H	H	H	H	H	H	H	H
L	L	L	H	H	H	H	H	H	H	H	H	H	L	H	H	H	H	H	H	H	H
L	L	H	L	L	L	H	H	H	H	H	H	H	H	L	H	H	H	H	H	H	H
L	L	H	L	L	H	H	H	H	H	H	H	H	H	H	L	H	H	H	H	H	H
L	L	H	L	H	L	H	H	H	H	H	H	H	H	H	H	L	H	H	H	H	H
L	L	H	L	H	H	H	H	H	H	H	H	H	H	H	H	H	L	H	H	H	H
L	L	H	H	L	L	H	H	H	H	H	H	H	H	H	H	H	H	L	H	H	H
L	L	H	H	L	H	H	H	H	H	H	H	H	H	H	H	H	H	H	L	H	H
L	L	H	H	H	L	H	H	H	H	H	H	H	H	H	H	H	H	H	H	L	H
L	L	H	H	H	H	H	H	H	H	H	H	H	H	H	H	H	H	H	H	H	L
L	H	X	X	X	X	H	H	H	H	H	H	H	H	H	H	H	H	H	H	H	H
H	L	X	X	X	X	H	H	H	H	H	H	H	H	H	H	H	H	H	H	H	H
H	H	X	X	X	X	H	H	H	H	H	H	H	H	H	H	H	H	H	H	H	H

H = high level, L = low level, X = irrelevant

schematics of inputs and outputs

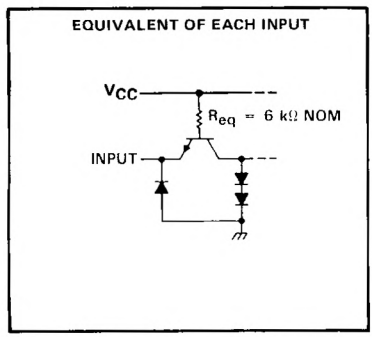

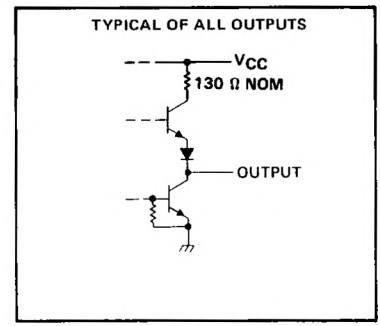

TEXAS INSTRUMENTS
POST OFFICE BOX 655012 • DALLAS, TEXAS 75265

logic diagram (positive logic)

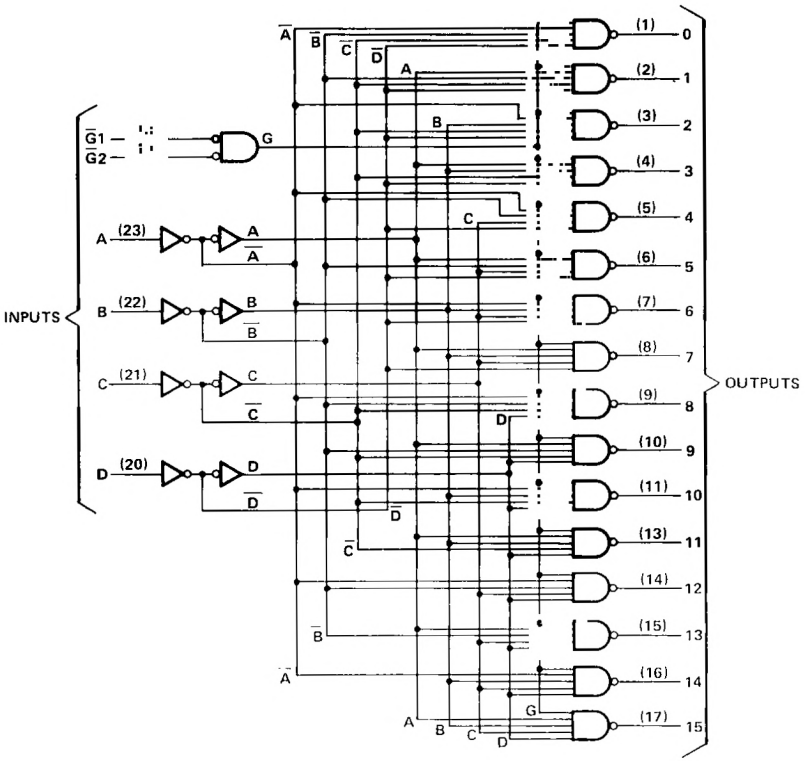

absolute maximum ratings over operating free-air temperature range (unless otherwise noted)

Supply voltage, V_{CC} (see Note 1) . . . . . 7 V
Input voltage . . . . . 5.5 V
Operating free-air temperature range: SN54154 Circuits . . . . . −55°C to 125°C
SN74154 Circuits . . . . . 0°C to 70°C
Storage temperature range . . . . . −65°C to 150°C

NOTE 1: Voltage values are with respect to network ground terminal.

recommended operating conditions

	SN54154			SN74154			UNIT
	MIN	NOM	MAX	MIN	NOM	MAX	
Supply voltage, V_{CC}	4.5	5	5.5	4.75	5	5.25	V
High-level output current, I_{OH}			−800			−800	μA
Low-level output current, I_{OL}			16			16	mA
Operating free-air temperature, T_A	−55		125	0		70	°C

electrical characteristics over recommended operating free-air temperature range (unless otherwise noted)

PARAMETER		TEST CONDITIONS†	SN54154			SN74154			UNIT
			MIN	TYP	MAX	MIN	TYP‡	MAX	
V_{IH}	High-level input voltage		2			2			V
V_{IL}	Low-level input voltage				0.8			0.8	V
V_{IK}	Input clamp voltage	V_{CC} = MIN, I_I = −12 mA			−1.5			−1.5	V
V_{OH}	High-level output voltage	V_{CC} = MIN, V_{IH} = 2 V, V_{IL} = 0.8 V, I_{OH} = −800 μA	2.4	3.4		2.4	3.4		V
V_{OL}	Low-level output voltage	V_{CC} = MIN, V_{IH} = 2 V, V_{IL} = 0.8 V, I_{OL} = 16 mA		0.2	0.4		0.2	0.4	V
I_I	Input current at maximum input voltage	V_{CC} = MAX, V_I = 5.5 V			1			1	mA
I_{IH}	High-level input current	V_{CC} = MAX, V_I = 2.4 V			40			40	μA
I_{IL}	Low-level input current	V_{CC} = MAX, V_I = 0.4 V			−1.6			−1.6	mA
I_{OS}	Short-circuit output current§	V_{CC} = MAX	−20		−55	−18		−57	mA
I_{CC}	Supply current	V_{CC} = MAX, See Note 2		34	49		34	56	mA

†For conditions shown as MIN or MAX, use the appropriate value specified under recommended operating conditions for the applicable type.
‡All typical values are at V_{CC} = 5 V, T_A = 25°C.
§Not more than one output should be shorted at a time.
NOTE 2: I_{CC} is measured with all inputs grounded and all outputs open.

switching characteristics, V_{CC} = 5 V, T_A = 25°C

PARAMETER		TEST CONDITIONS	MIN	TYP	MAX	UNIT
t_{PLH}	Propagation delay time, low-to-high-level output, from A, B, C, or D inputs through 3 levels of logic	C_L = 15 pF, R_L = 400 Ω, See Note 3		24	36	ns
t_{PHL}	Propagation delay time, high-to-low-level output, from A, B, C, or D inputs through 3 levels of logic			22	33	ns
t_{PLH}	Propagation delay time, low-to-high-level output, from either strobe input			20	30	ns
t_{PHL}	Propagation delay time, high-to-low-level output, from either strobe input			18	27	ns

NOTE 3: Load circuits and voltage waveforms are shown in Section 1

TEXAS INSTRUMENTS
POST OFFICE BOX 655012 • DALLAS, TEXAS 75265

- **Applications:**
  Dual 2-to 4-Line Decoder
  Dual 1-to 4-Line Demultiplexer
  3-to 8-Line Decoder
  1-to 8-Line Demultiplexer
- **Individual Strobes Simplify Cascading for Decoding or Demultiplexing Larger Words**
- **Input Clamping Diodes Simplify System Design**
- **Choice of Outputs:**
  Totem Pole ('155, 'LS155A)
  Open-Collector ('156, 'LS156)

TYPES	TYPICAL AVERAGE PROPAGATION DELAY 3 GATE LEVELS	TYPICAL POWER DISSIPATION
'155, '156	21 ns	125 mW
'LS155A	18 ns	31 mW
'LS156	32 ns	31 mW

SN54155, SN54156, SN54LS155A,
SN54LS156 . . . J OR W PACKAGE
SN74155, SN74156 . . . N PACKAGE
SN74LS155A, SN74LS156 . . . D OR N PACKAGE
(TOP VIEW)

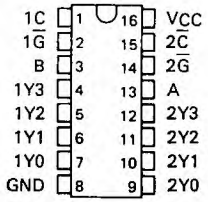

SN54LS155A, SN54LS156 . . . FK PACKAGE
(TOP VIEW)

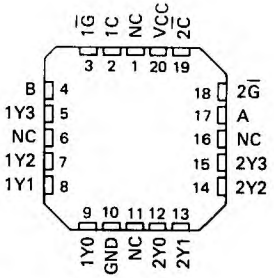

NC - No internal connection

description

These monolithic transistor-transistor-logic (TTL) circuits feature dual 1-line-to-4-line demultiplexers with individual strobes and common binary-address inputs in a single 16-pin package. When both sections are enabled by the strobes, the common binary-address inputs sequentially select and route associated input data to the appropriate output of each section. The individual strobes permit activating or inhibiting each of the 4-bit sections as desired. Data applied to input 1C is inverted at its outputs and data applied at $2\overline{C}$ is not inverted through its outputs. The inverter following the 1C data input permits use as a 3-to-8-line decoder or 1-to-8-line demultiplexer without external gating. Input clamping diodes are provided on all of these circuits to minimize transmission-line effects and simplify system design.

logic symbols (2-line to 4-line decoder)†

'155, 'LS155A

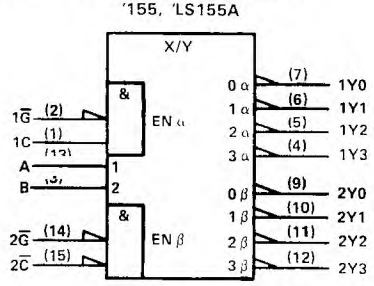

'156, 'LS156

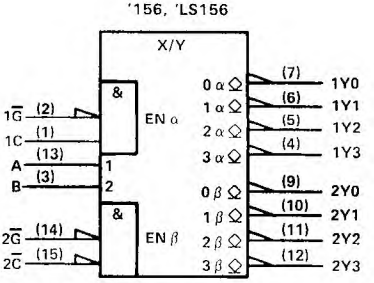

†These symbols are in accordance with ANSI/IEEE Std. 91-1984 and IEC Publication 617-12. For alternative symbols for other applications, see the following page.
Pin numbers shown are for D, J, N, and W packages.

PRODUCTION DATA documents contain information current as of publication date. Products conform to specifications per the terms of Texas Instruments standard warranty. Production processing does not necessarily include testing of all parameters.

additional logic symbols (alternatives)†

'155, 'LS155A

3-line to 8-line Decoder

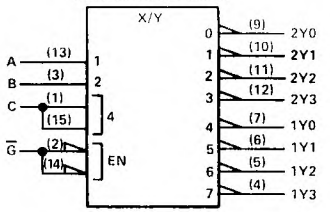

1-line to 4-line DMUX

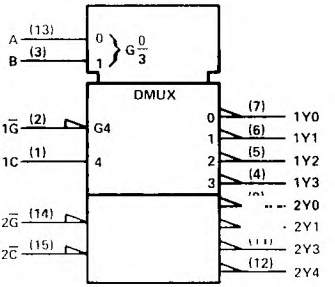

1-line to 8-line DMUX

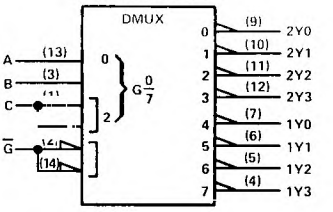

'156, 'LS156

3-line to 8-line Decoder

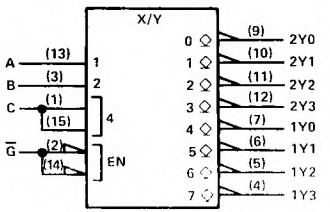

1-line to 4-line DMUX

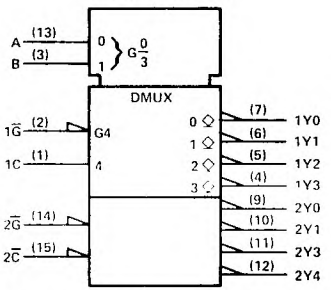

1-line to 8-line DMUX

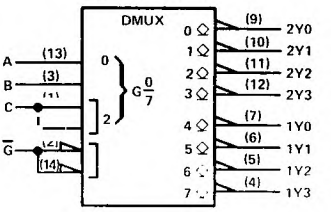

†These symbols are in accordance with ANSI/IEEE Std 91-1984 and IEC Publication 617-12.
Pin numbers shown are for D, J, N, and W packages.

schematics of inputs and outputs

'155, '156

EQUIVALENT OF EACH INPUT

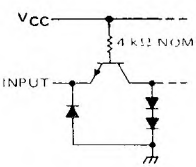

'155

TYPICAL OF ALL OUTPUTS

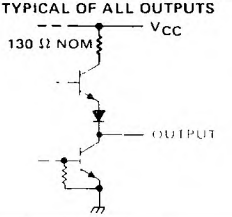

'156

TYPICAL OF ALL OUTPUTS

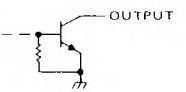

TEXAS INSTRUMENTS
POST OFFICE BOX 655012 • DALLAS, TEXAS 75265

schematics of inputs and outputs (continued)

'LS155A, 'LS156

EQUIVALENT OF EACH INPUT

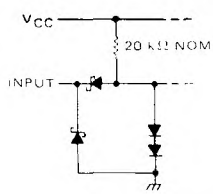

'LS155A

TYPICAL OF ALL OUTPUTS

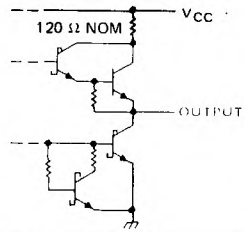

'LS156

TYPICAL OF ALL OUTPUTS

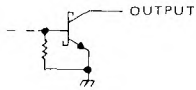

logic diagram (positive logic)

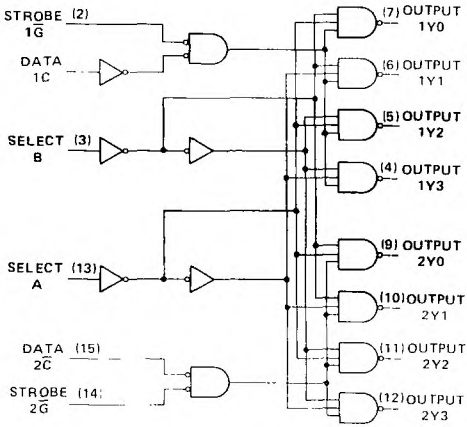

FUNCTION TABLES
2-LINE-TO-4-LINE DECODER
OR 1-LINE-TO-4-LINE DEMULTIPLEXER

INPUTS				OUTPUTS			
SELECT		STROBE	DATA				
B	A	1G̅	1C	1Y0	1Y1	1Y2	1Y3
X	X	H	X	H	H	H	H
L	L	L	H	L	H	H	H
L	H	L	H	H	L	H	H
H	L	L	H	H	H	L	H
H	H	L	H	H	H	H	L
X	X	X	L	H	H	H	H

INPUTS				OUTPUTS			
SELECT		STROBE	DATA				
B	A	2G̅	2C	2Y0	2Y1	2Y2	2Y3
X	X	H	X	H	H	H	H
L	L	L	L	L	H	H	H
L	H	L	L	H	L	H	H
H	L	L	L	H	H	L	H
H	H	L	L	H	H	H	L
X	X	X	H	H	H	H	H

FUNCTION TABLE
3-LINE-TO-8-LINE DECODER
OR 1-LINE-TO-8-LINE DEMULTIPLEXER

INPUTS				OUTPUTS							
SELECT			STROBE OR DATA	(0)	(1)	(2)	(3)	(4)	(5)	(6)	(7)
C†	B	A	G̅‡	2Y0	2Y1	2Y2	2Y3	1Y0	1Y1	1Y2	1Y3
X	X	X	H	H	H	H	H	H	H	H	H
L	L	L	L	L	H	H	H	H	H	H	H
L	L	H	L	H	L	H	H	H	H	H	H
L	H	L	L	H	H	L	H	H	H	H	H
L	H	H	L	H	H	H	L	H	H	H	H
H	L	L	L	H	H	H	H	L	H	H	H
H	L	H	L	H	H	H	H	H	L	H	H
H	H	L	L	H	H	H	H	H	H	L	H
H	H	H	L	H	H	H	H	H	H	H	L

†C = inputs 1C and 2C̅ connected together
‡G̅ = inputs 1G̅ and 2G̅ connected together
H = high level, L = low level, X = irrelevant

absolute maximum ratings over operating free-air temperature range (unless otherwise noted)

Supply voltage, V_{CC} (see Note 1) . . . . . 7 V
Input voltage: '155, '156 . . . . . 5.5 V
'LS155A, 'LS156 . . . . . 7 V
Off-state output voltage: '156 . . . . . 5.5 V
'LS156 . . . . . 7 V
Operating free-air temperature range: SN54', SN54LS' Circuits . . . . . −55°C to 125°C
SN74', SN74LS' Circuits . . . . . 0°C to 70°C
Storage temperature range . . . . . −65°C to 150°C

NOTE 1: Voltage values are with respect to network ground terminal.

recommended operating conditions

	SN54155			SN74155			UNIT
	MIN	NOM	MAX	MIN	NOM	MAX	
Supply voltage, V_{CC}	4.5	5	5.5	4.75	5		V
High-level output current, I_{OH}			−800			−800	μA
Low-level output current, I_{OL}			16			16	mA
Operating free-air temperature, T_A	−55		125	0		70	°C

electrical characteristics over recommended operating free-air temperature range (unless otherwise noted)

PARAMETER		TEST CONDITIONS†		SN54155 SN74155			UNIT
				MIN	TYP‡	MAX	
V_{IH}	High-level input voltage			2			V
V_{IL}	Low-level input voltage					0.8	V
V_{IK}	Input clamp voltage	V_{CC} = MIN, I_I = −8 mA				−1.5	V
V_{OH}	High-level output voltage	V_{CC} = MIN, V_{IH} = 2 V, V_{IL} = 0.8 V, I_{OH} = −800 μA		2.4	3.4		V
V_{OL}	Low-level output voltage	V_{CC} = MIN, V_{IH} = 2 V, V_{IL} = 0.8 V, I_{OL} = 16 mA			0.2	0.4	V
I_I	Input current at maximum input voltage	V_{CC} = MAX, V_I = 5.5 V				1	mA
I_{IH}	High-level input current	V_{CC} = MAX, V_I = 2.4 V				40	μA
I_{IL}	Low-level input current	V_{CC} = MAX, V_I = 0.4 V				−1.6	mA
I_{OS}	Short-circuit output current§	V_{CC} = MAX	SN54	−20		−55	mA
			SN74	−18		−57	
I_{CC}	Supply current	V_{CC} = MAX, See Note 2	SN54155		25	35	mA
			SN74155		25	40	

†For conditions shown as MIN or MAX, use the appropriate value specified under recommended operating conditions.
‡All typical values are at V_{CC} = 5 V, T_A = 25°C.
§Not more than one output should be shorted at a time.
NOTE 2: I_{CC} is measured with outputs open, A, B, and 1C inputs at 4.5 V, and 2C, 1G, and 2G inputs grounded.

switching characteristics, V_{CC} = 5 V, T_A = 25°C

PARAMETER	FROM (INPUT)	TO (OUTPUT)	LEVELS OF LOGIC	TEST CONDITIONS	SN54155 SN74155			UNIT
					MIN	TYP	MAX	
t_{PLH}	A, B, $2\overline{C}$, $1\overline{G}$, or $2\overline{G}$	Y	2	C_L = 15 pF, R_L = 400 Ω, See Note 3		13	20	ns
t_{PHL}	A, B, $2\overline{C}$, $1\overline{G}$, or $2\overline{G}$	Y	2			18	27	ns
t_{PLH}	A or B	Y	3			21	32	ns
t_{PHL}	A or B	Y	3			21	32	ns
t_{PLH}	1C	Y	3			16	24	ns
t_{PHL}	1C	Y	3			20	30	ns

NOTE 3: Load circuits and voltage waveforms are shown in Section 1.

TEXAS INSTRUMENTS
POST OFFICE BOX 655012 • DALLAS, TEXAS 75265

recommended operating conditions

	SN54156			SN74156			UNIT
	MIN	NOM	MAX	MIN	NOM	MAX	
Supply voltage, V_{CC}	4.5	5	5.5	4.75	5	5.25	V
High-level output voltage, V_{OH}			5.5			5.5	V
Low-level output current, I_{OL}			16			16	mA
Operating free-air temperature, T_A	−55		125	0		70	°C

electrical characteristics over recommended operating free-air temperature range (unless otherwise noted)

PARAMETER		TEST CONDITIONS†		SN54156 SN74156			UNIT
				MIN	TYP‡	MAX	
V_{IH}	High-level input voltage			2			V
V_{IL}	Low-level input voltage					0.8	V
V_{IK}	Input clamp voltage	V_{CC} = MIN, I_I = −8 mA				−1.5	V
I_{OH}	High-level output current	V_{CC} = MIN, V_{IH} = 2 V, V_{IL} = 0.8 V, V_{OH} = 5.5 V				250	μA
V_{OL}	Low-level output voltage	V_{CC} = MIN, V_{IH} = 2 V, V_{IL} = 0.8 V, I_{OL} = 16 mA			0.2	0.4	V
I_I	Input current at maximum input voltage	V_{CC} = MAX, V_I = 5.5 V				1	mA
I_{IH}	High-level input current	V_{CC} = MAX, V_I = 2.4 V				40	μA
I_{IL}	Low-level input current	V_{CC} = MAX, V_I = 0.4 V				−1.6	mA
I_{CC}	Supply current	V_{CC} = MAX, See Note 2	'156		25	35	mA
			SN74156		25	40	

†For conditions shown as MIN or MAX, use the appropriate value specified under recommended operating conditions.
‡All typical values are at V_{CC} = 5 V, T_A = 25°C.
NOTE 2: I_{CC} is measured with outputs open, A, B, and 1C inputs at 4.5 V, and 2C, 1G, and 2G inputs grounded.

switching characteristics, V_{CC} = 5 V, T_A = 25°C

PARAMETER§	FROM (INPUT)	TO (OUTPUT)	LEVELS OF LOGIC	TEST CONDITIONS	SN54156 SN74156			UNIT
					MIN	TYP	MAX	
t_{PLH}	A, B, $2\overline{C}$, $1\overline{G}$, or $2\overline{G}$	Y	2	C_L = 15 pF, R_L = 400 Ω, See Note 3		15	23	ns
t_{PHL}	A, B, $2\overline{C}$, $1\overline{G}$, or $2\overline{G}$	Y	2			20	30	ns
t_{PLH}	A or B	Y	3			23	34	ns
t_{PHL}	A or B	Y	3			23	34	ns
t_{PLH}	1C	Y	3			18	27	ns
t_{PHL}	1C	Y	3			22	33	ns

§t_{PLH} = propagation delay time, low-to-high-level output
t_{PHL} = propagation delay time, high-to-low-level output
NOTE 3: Load circuits and voltage waveforms are shown in Section 1.

recommended operating conditions

	SN54LS155A			SN74LS155A			UNIT
	MIN	NOM	MAX	MIN	NOM	MAX	
Supply voltage, V_{CC}	4.5	5	5.5	4.75	5	5.25	V
High-level output current, I_{OH}			−400			−400	μA
Low-level output current, I_{OL}			4			8	mA
Operating free-air temperature, T_A	−55		125	0		70	°C

electrical characteristics over recommended operating free-air temperature range (unless otherwise noted)

PARAMETER		TEST CONDITIONS†		SN54LS155A			SN74LS155A			UNIT
				MIN	TYP‡	MAX	MIN	TYP‡	MAX	
V_{IH}	High-level input voltage			2			2			V
V_{IL}	Low-level input voltage					0.7			0.8	V
V_{IK}	Input clamp voltage	V_{CC} = MIN, I_I = −18 mA				−1.5			−1.5	V
V_{OH}	High-level output voltage	V_{CC} = MIN, V_{IH} = 2 V, V_{IL} = $V_{IL\ max}$, I_{OH} = −400 μA		2.5	3.4		2.7	3.4		V
V_{OL}	Low-level output voltage	V_{CC} = MIN, V_{IH} = 2 V, V_{IL} = $V_{IL\ max}$	I_{OL} = 4 mA		0.25	0.4		0.25	0.4	V
			I_{OL} = 8 mA					0.35	0.5	
I_I	Input current at maximum input voltage	V_{CC} = MAX, V_I = 7 V				0.1			0.1	mA
I_{IH}	High-level input current	V_{CC} = MAX, V_I = 2.7 V				20			20	μA
I_{IL}	Low-level input current	V_{CC} = MAX, V_I = 0.4 V				−0.4			−0.4	mA
I_{OS}	Short-circuit output current§	V_{CC} = MAX		−20		−100	−20		−100	mA
I_{CC}	Supply current	V_{CC} = MAX, See Note 2			6.1	10		6.1	10	mA

†For conditions shown as MIN or MAX, use the appropriate value specified under recommended operating conditions.
‡All typical values are at V_{CC} = 5 V, T_A = 25°C.
§Not more than one output should be shorted at a time.
NOTE 2: I_{CC} is measured with outputs open, A, B, and 1C inputs at 4.5 V, and 2C, 1G, and 2G inputs grounded.

switching characteristics, V_{CC} = 5 V, T_A = 25°C

PARAMETER¶	FROM (INPUT)	TO (OUTPUT)	LEVELS OF LOGIC	TEST CONDITIONS	SN54LS155A SN74LS155A			UNIT
					MIN	TYP	MAX	
t_{PLH}	A, B, 2$\overline{C}$, 1$\overline{G}$, or 2$\overline{G}$	Y	2	C_L = 15 pF, R_L = 2 kΩ, See Note 3		10	15	ns
t_{PHL}	A, B, 2$\overline{C}$, 1$\overline{G}$, or 2$\overline{G}$	Y	2			19	30	ns
t_{PLH}	A or B	Y	3			17	26	ns
t_{PHL}	A or B	Y	3			19	30	ns
t_{PLH}	1C	Y	3			18	27	ns
t_{PHL}	1C	Y	3			18	27	ns

¶t_{PLH} = propagation delay time, low-to-high-level output
t_{PHL} = propagation delay time, high-to-low-level output
NOTE 3: Load circuits and voltage waveforms are shown in Section 1.

TEXAS INSTRUMENTS
POST OFFICE BOX 655012 • DALLAS, TEXAS 75265

recommended operating conditions

	SN54LS156			SN74LS156			UNIT
	MIN	NOM	MAX	MIN	NOM	MAX	
Supply voltage, V_{CC}	4.5	5	5.5	4.75	5	5.25	V
High-level output voltage, V_{OH}			5.5			5.5	V
Low-level output current, I_{OL}			4			8	mA
Operating free-air temperature, T_A	−55		125	0		70	°C

electrical characteristics over recommended operating free-air temperature range (unless otherwise noted)

PARAMETER		TEST CONDITIONS†			SN54LS156			SN74LS156			UNIT
					MIN	TYP‡	MAX	MIN	TYP‡	MAX	
V_{IH}	High-level input voltage				2			2			V
V_{IL}	Low-level input voltage						0.7			0.8	V
V_{IK}	Input clamp voltage	V_{CC} = MIN,	I_I = −18 mA				−1.5			−1.5	V
I_{OH}	High-level output current	V_{CC} = MIN, V_{IL} = V_{IL} max,	V_{IH} = 2 V, V_{OH} = 5.5 V				100			100	μA
V_{OL}	Low-level output voltage	V_{CC} = MIN, V_{IL} = V_{IL} max	V_{IH} = 2 V,	I_{OL} = 4 mA		0.25	0.4		0.25	0.4	V
				I_{OL} = 8 mA					0.35	0.5	
I_I	Input current at maximum input voltage	V_{CC} = MAX,	V_I = 7 V				0.1			0.1	mA
I_{IH}	High-level input current	V_{CC} = MAX,	V_I = 2.7 V				20			20	μA
I_{IL}	Low-level input current	V_{CC} = MAX,	V_I = 0.4 V				−0.4			−0.4	mA
I_{CC}	Supply current	V_{CC} = MAX,	See Note 2			6.1	10		6.1	10	mA

†For conditions shown as MIN or MAX, use the appropriate value specified under recommended operating conditions.
‡All typical values are at V_{CC} = 5 V, T_A = 25°C.
NOTE 2: I_{CC} is measured with outputs open, A, B, and 1C inputs at 4.5 V, and 2C, 1G, and 2G inputs grounded.

switching characteristics, V_{CC} = 5 V, T_A = 25°C

PARAMETER§	FROM (INPUT)	TO (OUTPUT)	LEVELS OF LOGIC	TEST CONDITIONS	SN54LS156 SN74LS156			UNIT
					MIN	TYP	MAX	
t_{PLH}	A, B, $2\overline{C}$, $1\overline{G}$, or $2\overline{G}$	Y	2	C_L = 15 pF, R_L = 2 kΩ, See Note 3		25	40	ns
t_{PHL}	A, B, $2\overline{C}$, $1\overline{G}$, or $2\overline{G}$	Y	2			34	51	ns
t_{PLH}	A or B	Y	3			31	46	ns
t_{PHL}	A or B	Y	3			34	51	ns
t_{PLH}	1C	Y	3			32	48	ns
t_{PHL}	1C	Y	3			32	48	ns

§t_{PLH} = propagation delay time, low-to-high-level output
t_{PHL} = propagation delay time, high-to-low-level output
NOTE 3: Load circuits and voltage waveforms are shown in Section 1.

- Buffered Inputs and Outputs
- Three Speed/Power Ranges Available

TYPES	TYPICAL AVERAGE PROPAGATION TIME	TYPICAL POWER DISSIPATION
'157	9 ns	150 mW
'LS157	9 ns	49 mW
'S157	5 ns	250 mW
'LS158	7 ns	24 mW
'S158	4 ns	195 mW

applications

- Expand Any Data Input Point
- Multiplex Dual Data Buses
- Generate Four Functions of Two Variables (One Variable Is Common)
- Source Programmable Counters

description

These monolithic data selectors/multiplexers contain inverters and drivers to supply full on-chip data selection to the four output gates. A separate strobe input is provided. A 4-bit word is selected from one of two sources and is routed to the four outputs. The '157, 'LS157, and 'S157 present true data whereas the 'LS158 and 'S158 present inverted data to minimize propagation delay time.

FUNCTION TABLE

INPUTS				OUTPUT Y	
STROBE $\overline{G}$	SELECT $\overline{A}$/B	A	B	'157, 'LS157, 'S157	'LS158 'S158
H	X	X	X	L	H
L	L	L	X	L	H
L	L	H	X	H	L
L	H	X	L	L	H
L	H	X	H	H	L

H = high level, L = low level, X = irrelevant

SN54157, SN54LS157, SN54S157, SN54LS158, SN54S158 . . . J OR W PACKAGE
SN74157 . . . N PACKAGE
SN74LS157, SN74S157, SN74LS158, SN74S158 . . . D OR N PACKAGE
(TOP VIEW)

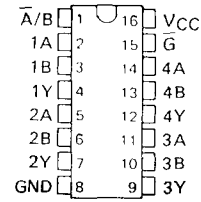

SN54LS157, SN54S157, SN54LS158, SN54S158 . . . FK PACKAGE
(TOP VIEW)

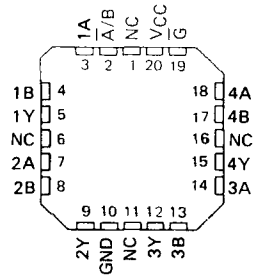

NC – No internal connection

absolute maximum ratings over operating free-air temperature range (unless otherwise noted)

Supply voltage, V_{CC} (See Note 1) . . . . . 7 V
Input voltage: '157, 'S158 . . . . . 5.5 V
'LS157, 'LS158 . . . . . 7 V
Operating free-air temperature range: SN54' . . . . . −55°C to 125°C
SN74' . . . . . 0°C to 70°C
Storage temperature range . . . . . −65°C to 150°C

NOTE 1: Voltage values are with respect to network ground terminal.

PRODUCTION DATA documents contain information current as of publication date. Products conform to specifications per the terms of Texas Instruments standard warranty. Production processing does not necessarily include testing of all parameters.

logic symbols†

'157, 'LS157, 'S157

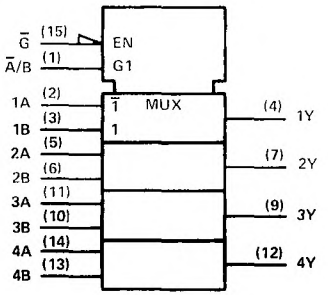

'158, 'LS158, 'S158

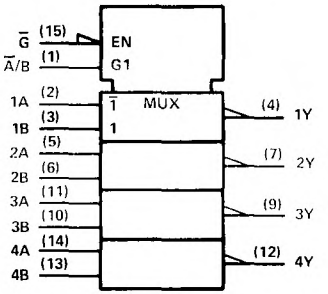

†These symbols are in accordance with ANSI/IEEE Std. 91-1984 and IEC Publication 617-12.
Pin numbers shown are for D, J, N, and W packages.

logic diagram (positive logic)

'157

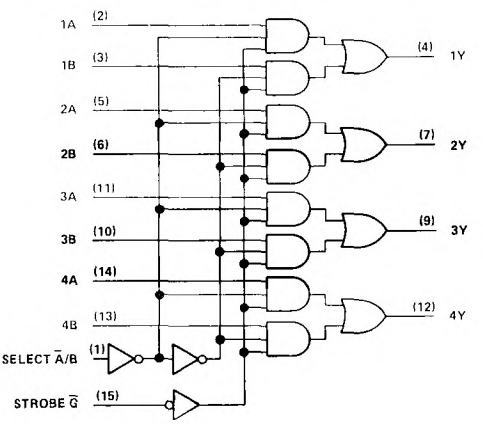

schematics of inputs and outputs

'157

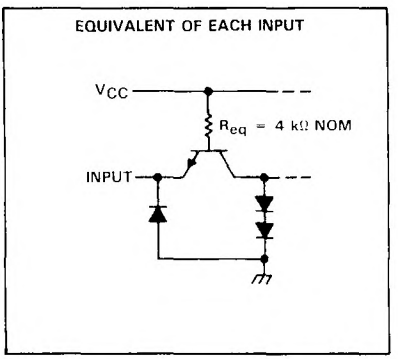

'157

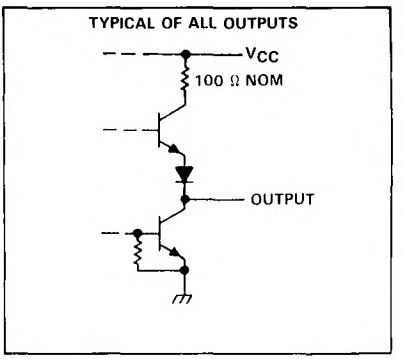

TEXAS INSTRUMENTS
POST OFFICE BOX 655012 • DALLAS, TEXAS 75265

logic diagrams (positive logic)

'LS157, 'S157

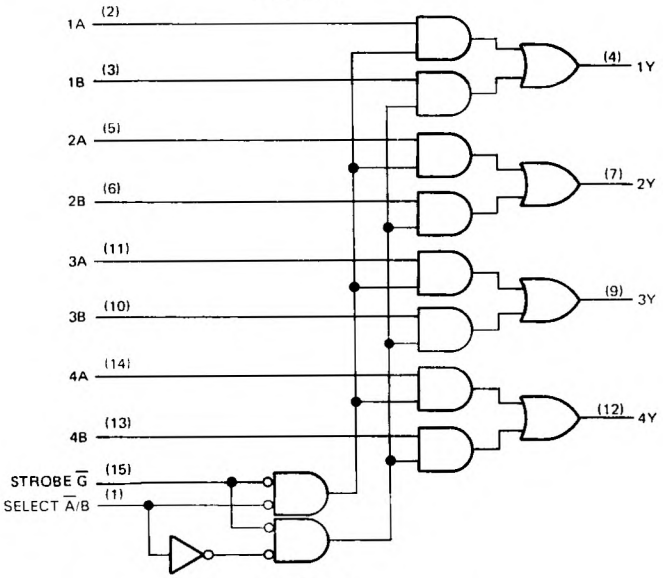

'LS158, 'S158

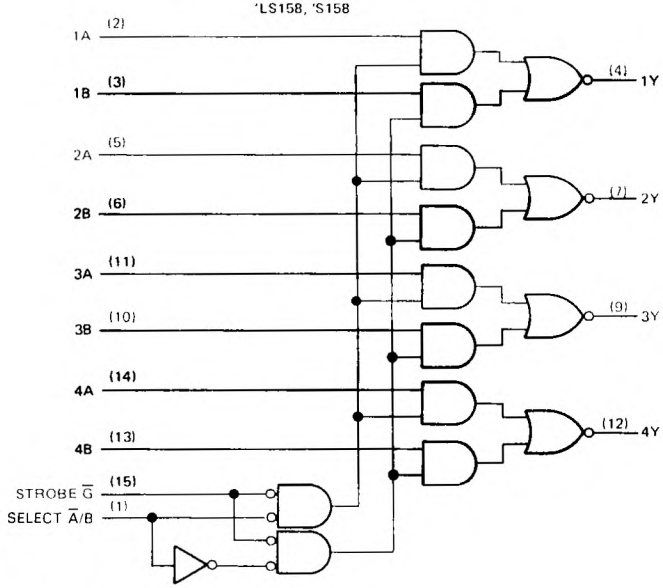

Pin numbers shown are for D, J, N, and W packages.

schematics of inputs and outputs

'LS157, 'LS158

EQUIVALENT OF EACH INPUT

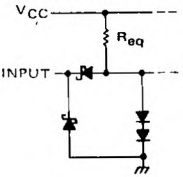

S or G inputs: R_{eq} = 8.5 kΩ NOM
A or B inputs: R_{eq} = 17 kΩ NOM

TYPICAL OF ALL OUTPUTS

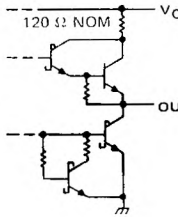

'S157, 'S158

EQUIVALENT OF EACH INPUT

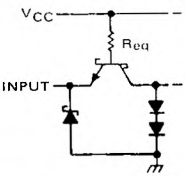

S or G inputs: R_{eq} = 1.4 kΩ NOM
A or B inputs: R_{eq} = 2.8 kΩ NOM

TYPICAL OF ALL OUTPUTS

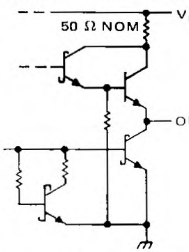

recommended operating conditions

	SN54157			SN74157			UNIT
	MIN	NOM	MAX	MIN	NOM	MAX	
Supply voltage, V_{CC}	4.5	5	5.5	4.75	5	5.25	V
High-level output current, I_{OH}			−800			−800	μA
Low-level output current, I_{OL}			16			16	mA
Operating free-air temperature, T_A	−55		125	0		70	°C

electrical characteristics over recommended operating free-air temperature range (unless otherwise noted)

PARAMETER		TEST CONDITIONS†	SN54157			SN74157			UNIT
			MIN	TYP‡	MAX	MIN	TYP‡	MAX	
V_{IH}	High-level input voltage		2			2			V
V_{IL}	Low-level input voltage				0.8			0.8	V
V_{IK}	Input clamp voltage	V_{CC} = MIN, I_I = −12 mA			−1.5			−1.5	V
V_{OH}	High-level output voltage	V_{CC} = MIN, V_{IH} = 2 V, V_{IL} = 0.8 V, I_{OH} = −800 μA	2.4	3.4		2.4	3.4		V
V_{OL}	Low-level output voltage	V_{CC} = MIN, V_{IH} = 2 V, V_{IL} = 0.8 V, I_{OL} = 16 mA		0.2	0.4		0.2	0.4	V
I_I	Input current at maximum input voltage	V_{CC} = MAX, V_I = 5.5 V			1			1	mA
I_{IH}	High-level input current	V_{CC} = MAX, V_I = 2.4 V			40			40	μA
I_{IL}	Low-level input current	V_{CC} = MAX, V_I = 0.4 V			−1.6			−1.6	mA
I_{OS}	Short-circuit output current§	V_{CC} = MAX	−20		−55	−18		−55	mA
I_{CC}	Supply current	V_{CC} = MAX, See Note 2		30	48		30	48	mA

†For conditions shown as MIN or MAX, use the appropriate value specified under recommended operating conditions.
‡All typical values are at V_{CC} = 5 V, T_A = 25°C.
§Not more than one output should be shorted at a time and duration of short-circuit should not exceed one second.
NOTE 2: I_{CC} is measured with 4.5 V applied to all inputs and all outputs open.

switching characteristics, V_{CC} = 5 V, T_A = 25°C

PARAMETER¶	FROM (INPUT)	TEST CONDITIONS	MIN	TYP	MAX	UNIT
t_{PLH}	Data	C_L = 15 pF, R_L = 400 Ω, See Note 3		9	14	ns
t_{PHL}				9	14	
t_{PLH}	Strobe $\overline{G}$			13	20	ns
t_{PHL}				14	21	
t_{PLH}	Select $\overline{A}$/B			15	23	ns
t_{PHL}				18	27	

¶t_{PLH} = propagation delay time, low-to-high-level output
t_{PHL} = propagation delay time, high-to-low-level output
NOTE 3: Load circuits and voltage waveforms are shown in Section 1.

TEXAS INSTRUMENTS
POST OFFICE BOX 655012 • DALLAS, TEXAS 75265

recommended operating conditions

		SN54LS'			SN74LS'			UNIT
		MIN	NOM	MAX	MIN	NOM	MAX	
V_{CC}	Supply voltage	4.5	5	5.5	4.75	5	5.25	V
I_{OH}	High-level output current			400				μA
I_{OL}	Low-level output current			4			8	mA
T_A	Operating free-air temperature	−55		125	0		70	°C

electrical characteristics over recommended operating free-air temperature range (unless otherwise noted)

PARAMETER			TEST CONDITIONS†			SN54LS'			SN74LS'			UNIT
						MIN	TYP‡	MAX	MIN	TYP‡	MAX	
V_{IH}	High-level input voltage					2			2			V
V_{IL}	Low-level input voltage							0.7			0.8	V
V_{IK}	Input clamp voltage		V_{CC} = MIN,	I_I = −18 mA				−1.5			−1.5	V
V_{OH}	High-level output voltage		V_{CC} = MIN, V_{IL} = MAX,	V_{IH} = 2 V, I_{OH} = −400 μA		2.5	3.4		2.7	3.4		V
V_{OL}	Low-level output voltage		V_{CC} = MIN, V_{IL} = MAX	V_{IH} = 2 V,	I_{OL} = 4 mA		0.25	0.4		0.25	0.4	V
					I_{OL} = 8 mA					0.35	0.5	
I_I	Input current at maximum input voltage	A/B or G	V_{CC} = MAX,	V_I = 7 V				0.2			0.2	mA
		A or B						0.1			0.1	
I_{IH}	High-level input current	A/B or G	V_{CC} = MAX,	V_I = 2.7 V				40			40	μA
		A or B						20			20	
I_{IL}	Low-level input current	A/B or G	V_{CC} = MAX,	V_I = 0.4 V				−0.8			−0.8	mA
		A or B						−0.4			−0.4	
I_{OS}	Short-circuit output current§		V_{CC} = MAX			−20		−100	−20		−100	mA
I_{CC}	Supply current		V_{CC} = MAX,	See Note 2	'LS157		9.7	16		9.7	16	mA
					'LS158		4.8	8		4.8	8	
			V_{CC} = MAX, All A inputs at 4.5 V, All other inputs at 0 V		'LS158		6.5	11		6.5	11	

†For conditions shown as MIN or MAX, use the appropriate value specified under recommended operating conditions.
‡All typical values are at V_{CC} = 5 V, T_A = 25°C.
§Not more than one output should be shorted at a time and duration of short-circuit should not exceed one second.
NOTE 2: I_{CC} is measured with 4.5 V applied to all inputs and all outputs open.

switching characteristics, V_{CC} = 5 V, T_A = 25°C

PARAMETER¶	FROM (INPUT)	TEST CONDITIONS	'LS157			'LS158			UNIT
			MIN	TYP	MAX	MIN	TYP	MAX	
t_{PLH}	Data	C_L = 15 pF, R_L = 2 kΩ, See Note 3		9	14		7	12	ns
t_{PHL}				9	14		10	15	
t_{PLH}	Strobe G			13	20		11	17	ns
t_{PHL}				14	21		18	24	
t_{PLH}	Select A/B			15	23		13	20	ns
t_{PHL}				18	27		16	24	

¶t_{PLH} = propagation delay time, low-to-high-level output
t_{PHL} = propagation delay time, high-to-low-level output
NOTE 3: Load circuits and voltage diagrams are shown in Section 1.

recommended operating conditions

	SN54S157 SN54S158			SN74S157 SN74S158			UNIT
	MIN	NOM	MAX	MIN	NOM	MAX	
Supply voltage, V_{CC}	4.5	5	5.5	4.75	5	5.25	V
High-level output current, I_{OH}			−1			−1	mA
Low-level output current, I_{OL}			20			20	mA
Operating free-air temperature, T_A	−55		125	0		70	°C

electrical characteristics over recommended operating free-air temperature range (unless otherwise noted)

PARAMETER			TEST CONDITIONS†		SN54S157 SN74S157			SN54S158 SN74S158			UNIT
					MIN	TYP‡	MAX	MIN	TYP‡	MAX	
V_{IH}	High-level input voltage				2			2			V
V_{IL}	Low-level input voltage						0.8			0.8	V
V_{IK}	Input clamp voltage		V_{CC} = MIN, I_I = −18 mA				−1.2			−1.2	V
V_{OH}	High-level output voltage		V_{CC} MIN, V_{IH} 2 V, V_{IL} 0.8 V, I_{OH} 1 mA	Series 54S	2.5	3.4		2.5	3.4		V
				Series 74S	2.7	3.4		2.7	3.4		
V_{OL}	Low-level output voltage		V_{CC} = MIN, V_{IH} = 2 V, V_{IL} = 0.8 V, I_{OL} = 20 mA				0.5			0.5	V
I_I	Input current at maximum input voltage		V_{CC} = MAX, V_I = 5.5 V				1			1	mA
I_{IH}	High-level input current	$\overline{A}/B$ or $\overline{G}$	V_{CC} = MAX, V_I = 2.7 V				100			100	μA
		A or B					50			50	
I_{IL}	Low-level input current	$\overline{A}/B$ or $\overline{G}$	V_{CC} = MAX, V_I = 0.5 V				−4			−4	mA
		A or B					−2			−2	
I_{OS}	Short-circuit ouput current§		V_{CC} = MAX		−40		−100	−40		−100	mA
I_{CC}	Supply current		V_{CC} = MAX, All inputs at 4.5 V, See Note 2			50	78		39	61	mA
			V_{CC} = MAX, A inputs at 4.5 V, B,G,S, inputs at 0 V, See Note 2							81	

†For conditions shown as MIN or MAX, use the appropriate value specified under recommended operating conditions.
‡All typical values are at V_{CC} = 5 V, T_A = 25°C.
§Not more than one output should be shorted at a time, and duration of the short-circuit should not exceed one second.
Note 2: I_{CC} is measured with all outputs open.

switching characteristics, V_{CC} = 5 V, T_A = 25°C

PARAMETER¶	FROM (INPUT)	TEST CONDITIONS	SN54S157 SN74S157			SN54S158 SN74S158			UNIT
			MIN	TYP	MAX	MIN	TYP	MAX	
t_{PLH}	Data	C_L = 15 pF, R_L = 280 Ω, See Note 3		5	7.5		4	6	ns
t_{PHL}				4.5	6.5		4	6	
t_{PLH}	Strobe $\overline{G}$			8.5	12.5		6.5	11.5	ns
t_{PHL}				7.5	12		7	12	
t_{PLH}	Select $\overline{A}/B$			9.5	15		8	12	ns
t_{PHL}				9.5	15		8	12	

¶t_{PLH} = propagation delay time, low-to-high-level output
t_{PHL} = propagation delay time, high-to-low-level output
NOTE 3: Load circuits and voltage waveforms are shown in Section 1.

TEXAS INSTRUMENTS
POST OFFICE BOX 655012 • DALLAS, TEXAS 75265

- Open-Collector Outputs for Interfacing with MOS or Memory Decoders/Drivers
- Decodes 4 Binary-Coded Inputs into One of 16 Mutually Exclusive Outputs
- Performs the Demultiplexing Function by Distributing Data from One Input Line to Any One of 16 Outputs
- Typical Average Propagation Delay Times:
  24 ns through 3 levels of Logic
  19 ns from Strobe Input
- Output Off-State Current is Less Than 50 μA
- Fully Compatible with Most TTL and MSI Circuits

SN54159 . . . J OR W PACKAGE
SN74159 . . . N PACKAGE
(TOP VIEW)

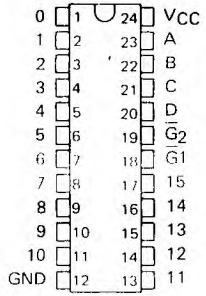

description

Each of these monolithic, 4-line-to-16 line decoders utilizes TTL circuitry to decode four binary-coded inputs into one of sixteen mutually exclusive open-collector outputs when both the strobe inputs, $\overline{G1}$ and $\overline{G2}$, are low. The demultiplexing function is performed by using the 4 input lines to address the output line, passing data from one of the strobe inputs with the other strobe input low. When either strobe input is high, all outputs are high. These demultiplexers are ideally suited for implementing MOS memory decoding or for interfacing with discrete memory address drivers. For ultra-high-speed applications, the SN54S138/SN74S138 or SN54S139/SN74S139 is recommended.

These circuits are fully compatible for use with most other TTL circuits. Input clamping diodes are provided to minimize transmission-line effects and thereby simplify system design. Input buffers are used to lower the fan-in requirement to only one normalized Series 54/74 load. A fan-out to 10 normalized Series 54/74 loads in the low-level state is available from each of the sixteen outputs. Typical power dissipation is 170 mW.

The SN54159 is characterized for operation over the full military temperature range of −55°C to 125°C; the SN74159 is characterized for operation from 0°C to 70°C.

logic symbols (alternatives)†

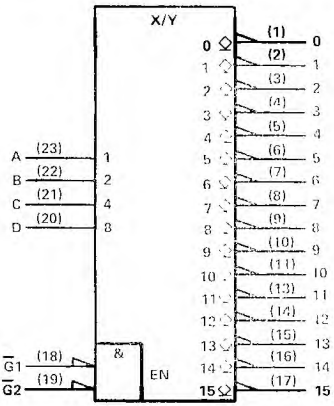

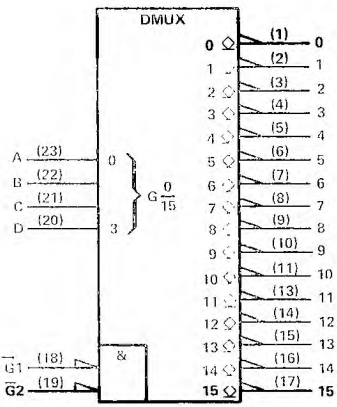

†These symbols are in accordance with ANSI/IEEE Std 91-1984 and IEC Publication 617-12.

PRODUCTION DATA documents contain information current as of publication date. Products conform to specifications per the terms of Texas Instruments standard warranty. Production processing does not necessarily include testing of all parameters.

FUNCTION TABLE

INPUTS						OUTPUTS															
$\overline{G1}$	$\overline{G2}$	D	C	B	A	0	1	2	3	4	5	6	7	8	9	10	11	12	13	14	15
L	L	L	L	L	L	L	H	H	H	H	H	H	H	H	H	H	H	H	H	H	H
L	L	L	L	L	H	H	L	H	H	H	H	H	H	H	H	H	H	H	H	H	H
L	L	L	L	H	L	H	H	L	H	H	H	H	H	H	H	H	H	H	H	H	H
L	L	L	L	H	H	H	H	H	L	H	H	H	H	H	H	H	H	H	H	H	H
L	L	L	H	L	L	H	H	H	H	L	H	H	H	H	H	H	H	H	H	H	H
L	L	L	H	L	H	H	H	H	H	H	L	H	H	H	H	H	H	H	H	H	H
L	L	L	H	H	L	H	H	H	H	H	H	L	H	H	H	H	H	H	H	H	H
L	L	L	H	H	H	H	H	H	H	H	H	H	L	H	H	H	H	H	H	H	H
L	L	H	L	L	L	H	H	H	H	H	H	H	H	L	H	H	H	H	H	H	H
L	L	H	L	L	H	H	H	H	H	H	H	H	H	H	L	H	H	H	H	H	H
L	L	H	L	H	L	H	H	H	H	H	H	H	H	H	H	L	H	H	H	H	H
L	L	H	L	H	H	H	H	H	H	H	H	H	H	H	H	H	L	H	H	H	H
L	L	H	H	L	L	H	H	H	H	H	H	H	H	H	H	H	H	L	H	H	H
L	L	H	H	L	H	H	H	H	H	H	H	H	H	H	H	H	H	H	L	H	H
L	L	H	H	H	L	H	H	H	H	H	H	H	H	H	H	H	H	H	H	L	H
L	L	H	H	H	H	H	H	H	H	H	H	H	H	H	H	H	H	H	H	H	L
L	H	X	X	X	X	H	H	H	H	H	H	H	H	H	H	H	H	H	H	H	H
H	L	X	X	X	X	H	H	H	H	H	H	H	H	H	H	H	H	H	H	H	H
H	H	X	X	X	X	H	H	H	H	H	H	H	H	H	H	H	H	H	H	H	H

H = high level, L = low level, X = irrelevant

logic diagram

Same as SN54154, SN74154.

absolute maximum ratings over operating free-air temperature range (unless otherwise noted)

Supply voltage, V_{CC} (see Note 1) . . . . . 7 V
Input voltage . . . . . 5.5 V
Off-state output voltage . . . . . 5.5 V
Operating free-air temperature range: SN54159 Circuits . . . . . −55°C to 125°C
SN74159 Circuits . . . . . 0°C to 70°C
Storage temperature range . . . . . −65°C to 150°C

NOTE 1: Voltage values are with respect to network ground terminal.

TEXAS INSTRUMENTS
POST OFFICE BOX 655012 • DALLAS, TEXAS 75265

recommended operating conditions

	SN54159			SN74159			UNIT
	MIN	NOM	MAX	MIN	NOM	MAX	
Supply voltage, V_{CC}	4.5	5	5.5	4.75	5	5.25	V
Low-level output current, I_{OL}			16			16	mA
Operating free-air temperature, T_A	−55		125	0		70	°C

electrical characteristics over recommended operating free-air temperature range (unless otherwise noted)

PARAMETER		TEST CONDITIONS†	MIN	TYP‡	MAX	UNIT
V_{IH}	High-level input voltage		2			V
V_{IL}	Low-level input voltage				0.8	V
V_{IK}	Input clamp voltage	V_{CC} = MIN, I_I = −12 mA			−1.5	V
I_{OH}	High-level output current	V_{CC} = MIN, V_{IH} = 2 V, V_{IL} = 0.8 V, V_{OH} = 5.5 V			50	μA
V_{OL}	Low-level output voltage	V_{CC} = MIN, V_{IH} = 2 V, V_{IL} = 0.8 V, I_{OL} = 16 mA			0.4	V
I_I	Input current at maximum input voltage	V_{CC} = MAX, V_I = 5.5 V			1	mA
I_{IH}	High-level input current	V_{CC} = MAX, V_I = 2.4 V			40	μA
I_{IL}	Low-level input current	V_{CC} = MAX, V_I = 0.4 V			−1.6	mA
I_{CC}	Supply current	V_{CC} = MAX, All inputs grounded		34	56	mA

†For conditions shown as MIN or MAX, use the appropriate value specified under recommended operating conditions for the applicable type.
‡All typical values are at V_{CC} = 5 V, T_A = 25°C

switching characteristics, V_{CC} = 5 V, T_A = 25°C

PARAMETER		TEST CONDITIONS	MIN	TYP	MAX	UNIT
t_{PLH}	Propagation delay time, low-to-high-level output, from A, B, C, or D inputs through 3 levels of logic	C_L = 15 pF, R_L = 400 Ω, See Note 2		23	36	ns
t_{PHL}	Propagation delay time, high-to-low-level output, from A, B, C, or D inputs through 3 levels of logic			24	36	ns
t_{PLH}	Propagation delay time, low-to-high-level output, from either strobe input			15	25	ns
t_{PHL}	Propagation delay time, high-to-low-level output, from either strobe input			22	36	ns

NOTE 2. Load circuits and voltage waveforms are shown in Section 1.

schematics of inputs and outputs

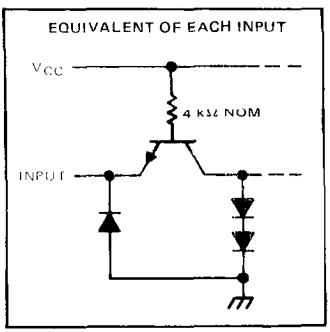

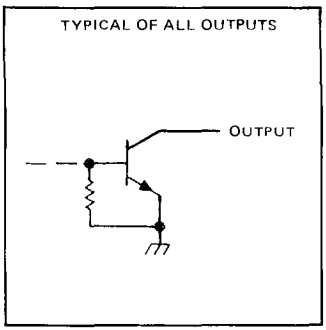

'160,'161,'LS160A,'LS161A . . . SYNCHRONOUS COUNTERS WITH DIRECT CLEAR
'162,'163,'LS162A,'LS163A,'S162,'S163 . . . FULLY SYNCHRONOUS COUNTERS

- Internal Look-Ahead for Fast Counting
- Carry Output for n-Bit Cascading
- Synchronous Counting
- Synchronously Programmable
- Load Control Line
- Diode-Clamped Inputs

TYPE	TYPICAL PROPAGATION TIME, CLOCK TO Q OUTPUT	TYPICAL MAXIMUM CLOCK FREQUENCY	TYPICAL POWER DISSIPATION
'160 thru '163	14 ns	32 MHz	305 mW
'LS162A thru 'LS163A	14 ns	32 MHz	93 mW
'S162 and 'S163	9 ns	70 MHz	475 mW

SERIES 54', 54LS' 54S' . . . J OR W PACKAGE
SERIES 74' . . . N PACKAGE
SERIES 74LS', 74S' . . . D OR N PACKAGE
(TOP VIEW)

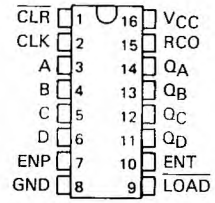

NC—No internal connection

SERIES 54LS', 54S' . . . FK PACKAGE
(TOP VIEW)

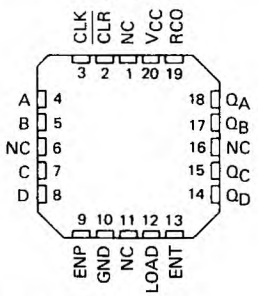

NC—No internal connection

description

These synchronous, presettable counters feature an internal carry look-ahead for application in high-speed counting designs. The '160,'162,'LS160A,'LS162A, and 'S162 are decade counters and the '161,'163,'LS161A,'LS163A, and 'S163 are 4-bit binary counters. Synchronous operation is provided by having all flip-flops clocked simultaneously so that the outputs change coincident with each other when so instructed by the count-enable inputs and internal gating. This mode of operation eliminates the output counting spikes that are normally associated with asynchronous (ripple clock) counters, however counting spikes may occur on the (RCO) ripple carry output. A buffered clock input triggers the four flip-flops on the rising edge of the clock input waveform.

These counters are fully programmable; that is, the outputs may be preset to either level. As presetting is synchronous, setting up a low level at the load input disables the counter and causes the outputs to agree with the setup data after the next clock pulse regardless of the levels of the enable inputs. Low-to-high transitions at the load input of the '160 thru '163 should be avoided when the clock is low if the enable inputs are high at or before the transition. This restriction is not applicable to the 'LS160A thru 'LS163A or 'S162 or 'S163. The clear function for the '160, '161,'LS160A, and 'LS161A is asynchronous and a low level at the clear input sets all four of the flip-flop outputs low regardless of the levels of clock, load, or enable inputs. The clear function for the '162,'163,'LS162A,'LS163A, 'S162, and 'S163 is synchronous and a low level at the clear input sets all four of the flip-flop outputs low after the next clock pulse, regardless of the levels of the enable inputs. This synchronous clear allows the count length to be modified easily as decoding the maximum count desired can be accomplished with one external NAND gate. The gate output is connected to the clear input to synchronously clear the counter to 0000 (LLLL). Low-to-high transitions at the clear input of the '162 and '163 should be avoided when the clock is low if the enable and load inputs are high at or before the transition.

PRODUCTION DATA documents contain information current as of publication date. Products conform to specifications per the terms of Texas Instruments standard warranty. Production processing does not necessarily include testing of all parameters.

The carry look-ahead circuitry provides for cascading counters for n-bit synchronous applications without additional gating. Instrumental in accomplishing this function are two count-enable inputs and a ripple carry output. Both count-enable inputs (P and T) must be high to count, and input T is fed forward to enable the ripple carry output. The ripple carry output thus enabled will produce a high-level output pulse with a duration approximately equal to the high-level portion of the Q_A output. This high-level overflow ripple carry pulse can be used to enable successive cascaded stages. High-to-low-level transitions at the enable P or T inputs of the '160 thru '163 should occur only when the clock input is high. Transitions at the enable P or T inputs of the 'LS160A thru 'LS163A or 'S162 and 'S163 are allowed regardless of the level of the clock input.

'LS160A thru 'LS163A, 'S162 and 'S163 feature a fully independent clock circuit. Changes at control inputs (enable P or T, or load) that will modify the operating mode have no effect until clocking occurs. The function of the counter (whether enabled, disabled, loading, or counting) will be dictated solely by the conditions meeting the stable setup and hold times.

logic symbols†

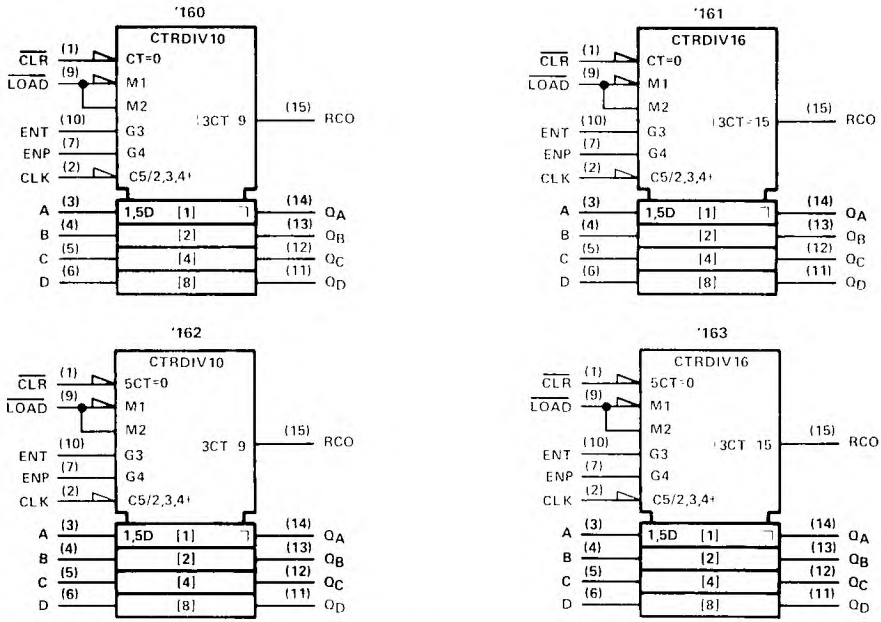

†These symbols are in accordance with ANSI/IEEE Std 91-1984 and IEC Publication 617-12.
Pin numbers shown are for D, J, N, and W packages.

TEXAS INSTRUMENTS
POST OFFICE BOX 655012 • DALLAS, TEXAS 75265

logic symbols (continued)†

'LS160A

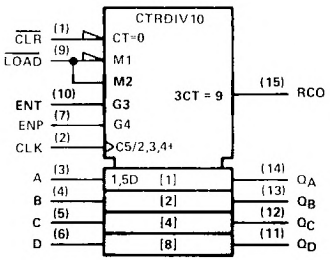

'LS161A

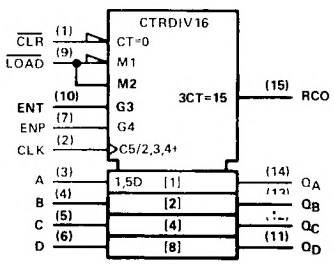

'LS162A, 'S162

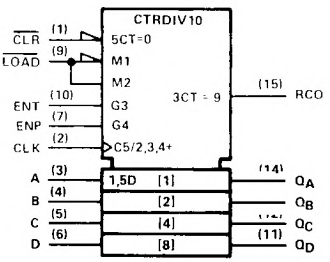

'LS163A, 'S163

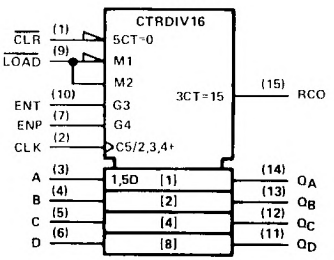

†These symbols are in accordance with ANSI/IEEE Std 91-1984 and IEC Publication 617-12.

Pin numbers shown are for D, J, N, and W packages.

logic diagram (positive logic)

SN54160, SN74160 SYNCHRONOUS DECADE COUNTERS

SN54162, SN74162 synchronous decade counters are similar; however the clear is synchronous as shown for the SN54163, SN74163 binary counters at right.

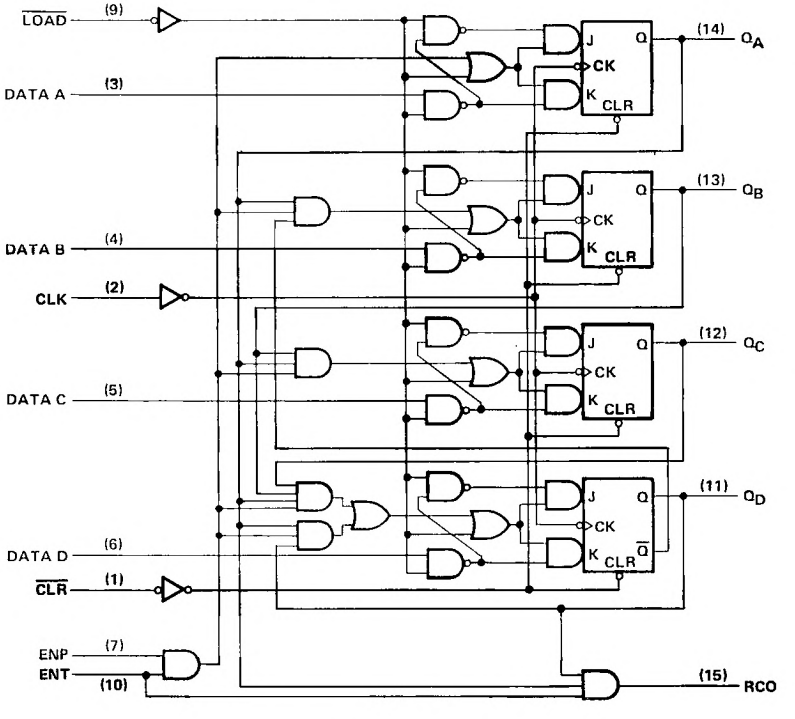

Pin numbers shown are for D, J, N, and W packages

TEXAS INSTRUMENTS
POST OFFICE BOX 655012 • DALLAS, TEXAS 75265

logic diagram (positive logic)

SN54163, SN74163 SYNCHRONOUS BINARY COUNTERS

SN54161, SN74161 synchronous binary counters are similar; however, the clear is asynchronous as shown for the SN54160, SN74160 decade counters at left.

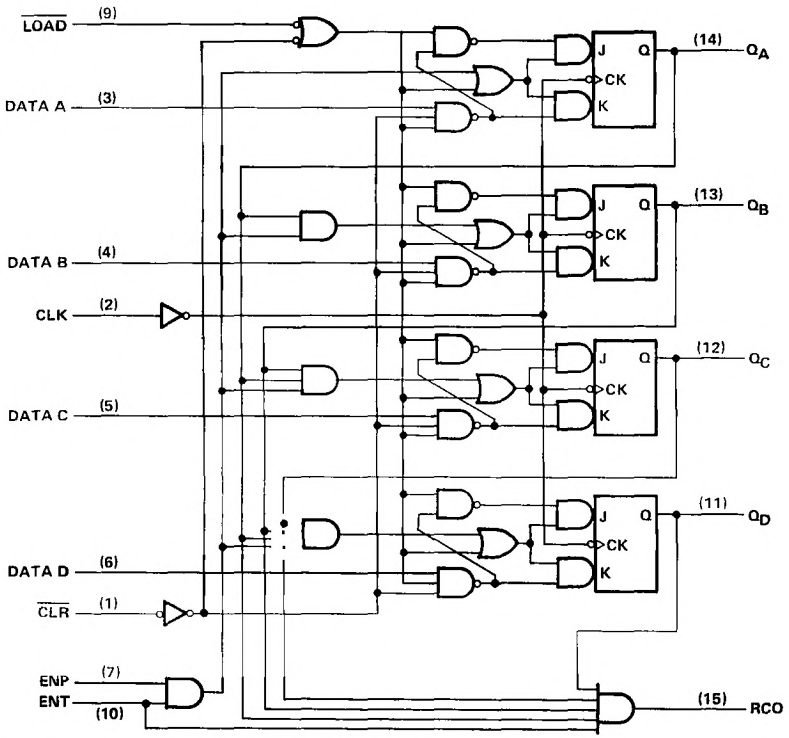

Pin numbers shown are for D, J, N, and W packages.

logic diagram (positive logic)

SN54LS160A, SN74LS160A SYNCHRONOUS
DECADE COUNTERS

SN54LS162A, SN74LS162A synchronous decade counters are similar; however the clear is synchronous as shown for the SN54LS163A, SN74LS163A binary counters at right.

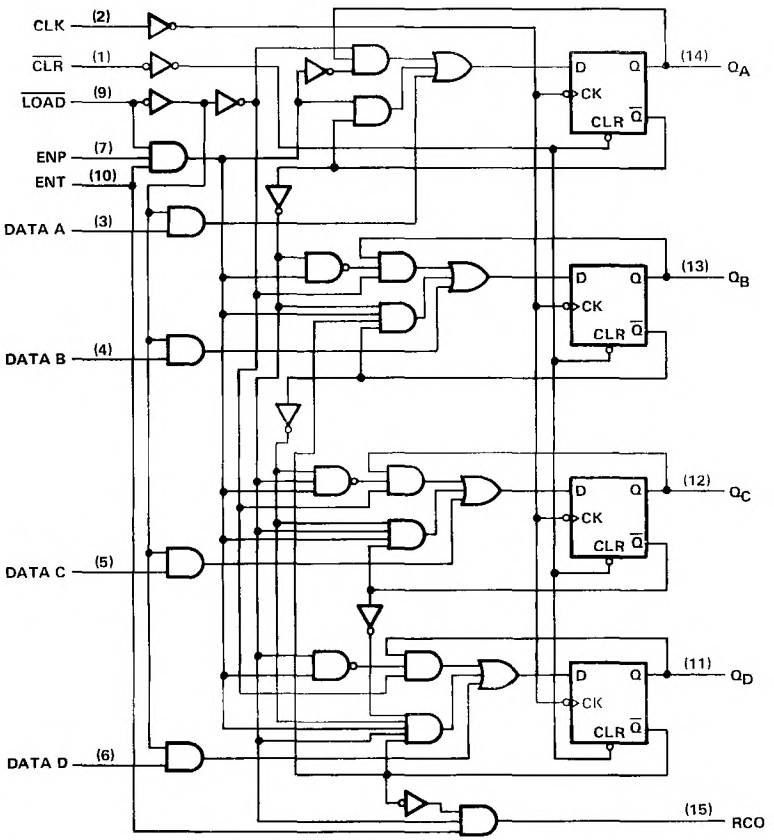

Pin numbers shown are for D, J, N, and W packages.

TEXAS INSTRUMENTS
POST OFFICE BOX 655012 • DALLAS, TEXAS 75265

logic diagram (positive logic)

SN54LS163A, SN74LS163A SYNCHRONOUS BINARY COUNTERS

SN54LS161A, SN74LS161A synchronous binary counters are similar; however, the clear is asynchronous as shown for the SN54LS160A, SN74LS160A decade counters at left.

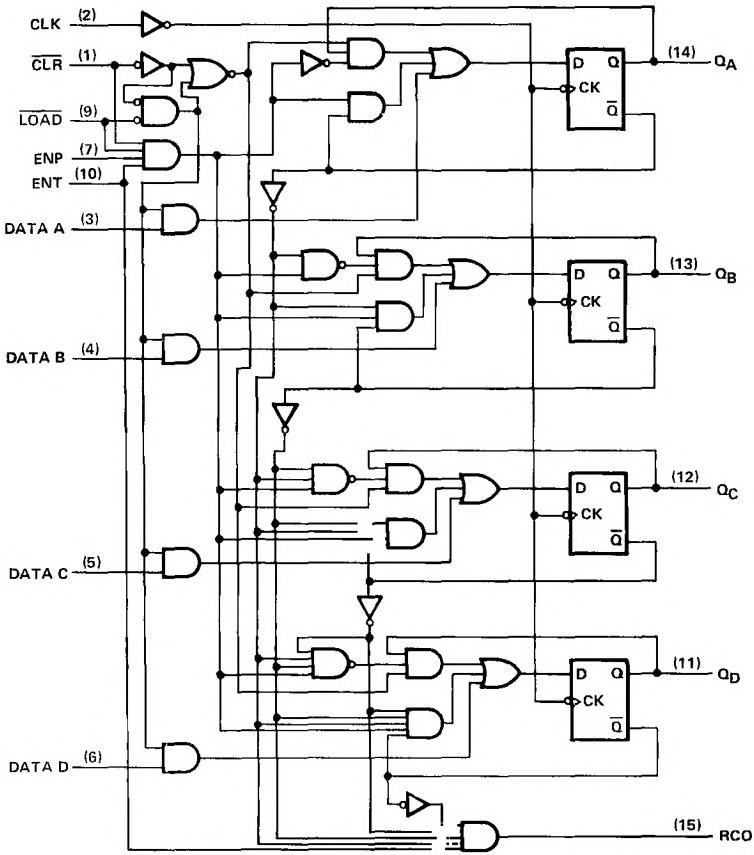

Pin numbers shown are for D, J, N, and W packages.

logic diagram (positive logic)

SN54S162, SN74S162 SYNCHRONOUS DECADE COUNTER

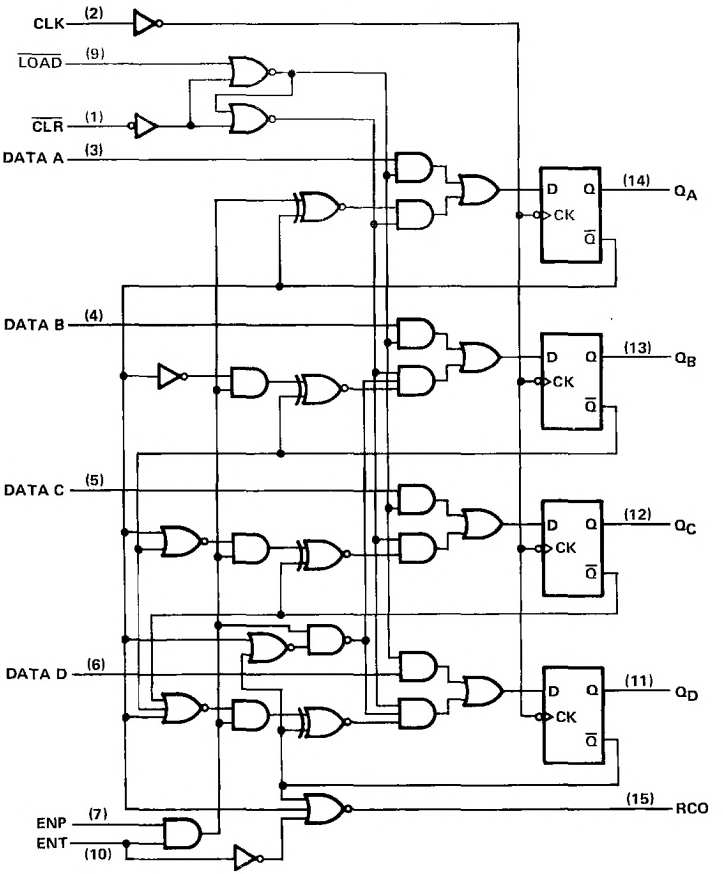

Pin numbers shown are for D, J, N, and W packages.

TEXAS INSTRUMENTS
POST OFFICE BOX 655012 • DALLAS, TEXAS 75265

logic diagram (positive logic)

SN54S163, SN74S163 SYNCHRONOUS DECADE COUNTER

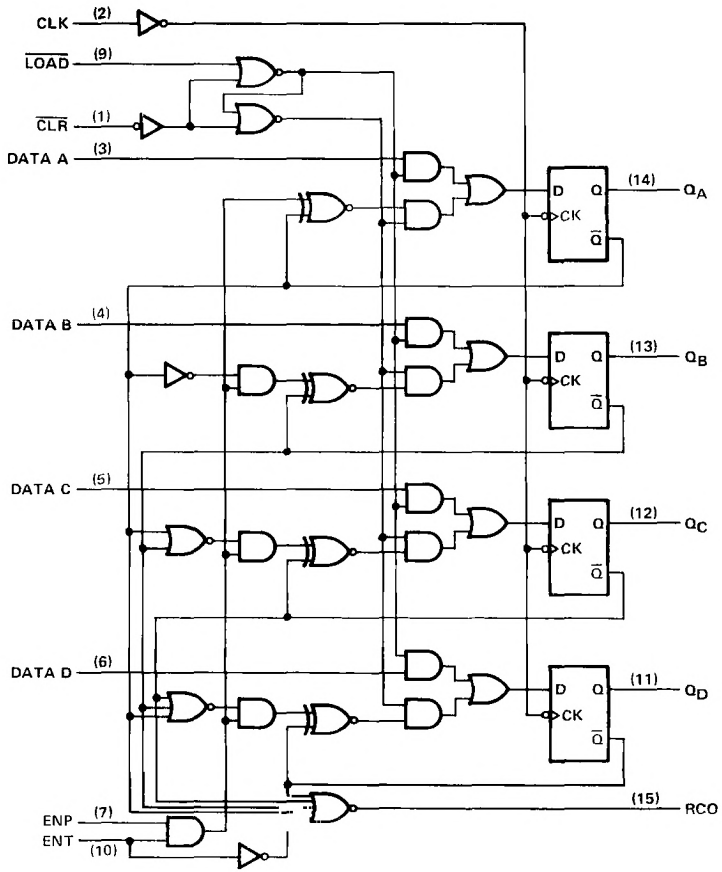

Pin numbers shown are for D, J, N, and W packages

'160, '162, 'LS160A, 'LS162A, 'S162 DECADE COUNTERS

typical clear, preset, count, and inhibit sequences

Illustrated below is the following sequence:

1. Clear outputs to zero ('160 and 'LS160A are asynchronous; '162, 'LS162A, and 'S162 are synchronous)
2. Preset to BCD seven
3. Count to eight, nine, zero, one, two, and three
4. Inhibit

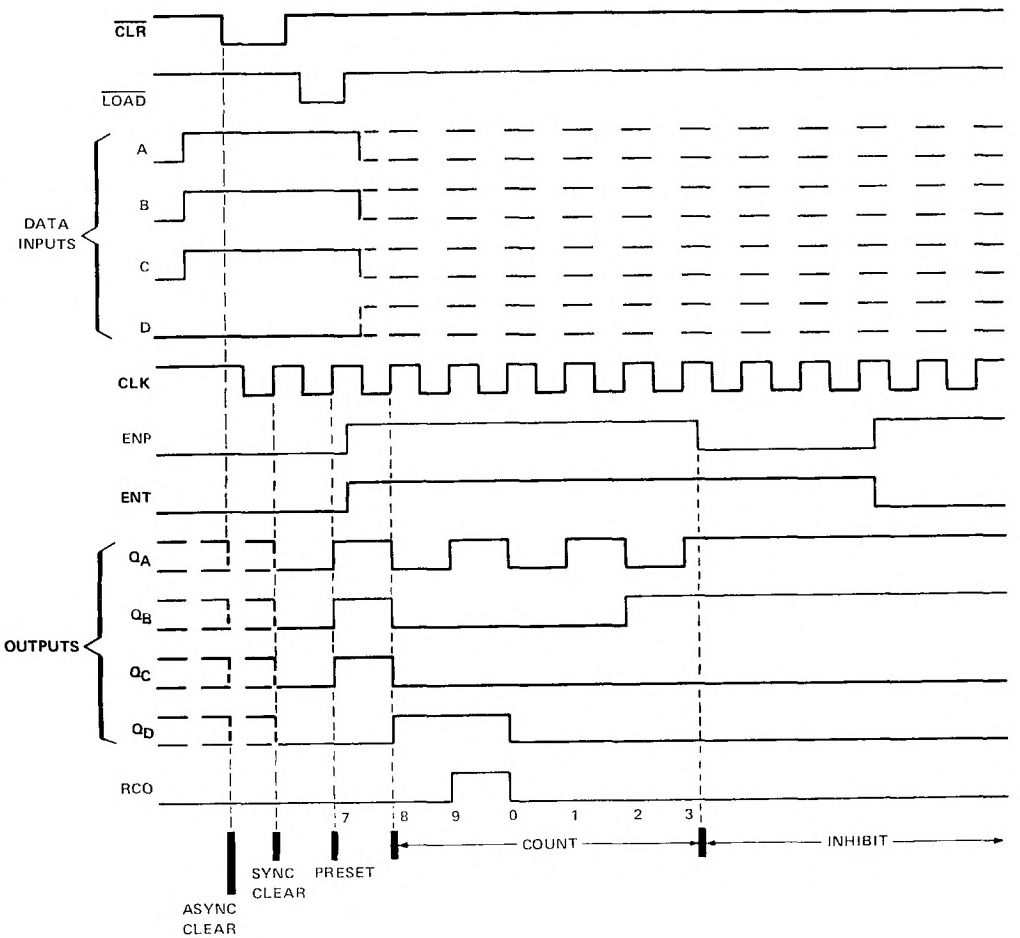

TEXAS INSTRUMENTS
POST OFFICE BOX 655012 • DALLAS, TEXAS 75265

'161, 'LS161A, '163, 'LS163A, 'S163 BINARY COUNTERS

typical clear, preset, count, and inhibit sequences

Illustrated below is the following sequence:

1. Clear outputs to zero ('161 and 'LS161A are asynchronous; '163, 'LS163A, and 'S163 are synchronous)
2. Preset to binary twelve
3. Count to thirteen, fourteen fifteen, zero, one, and two
4. Inhibit

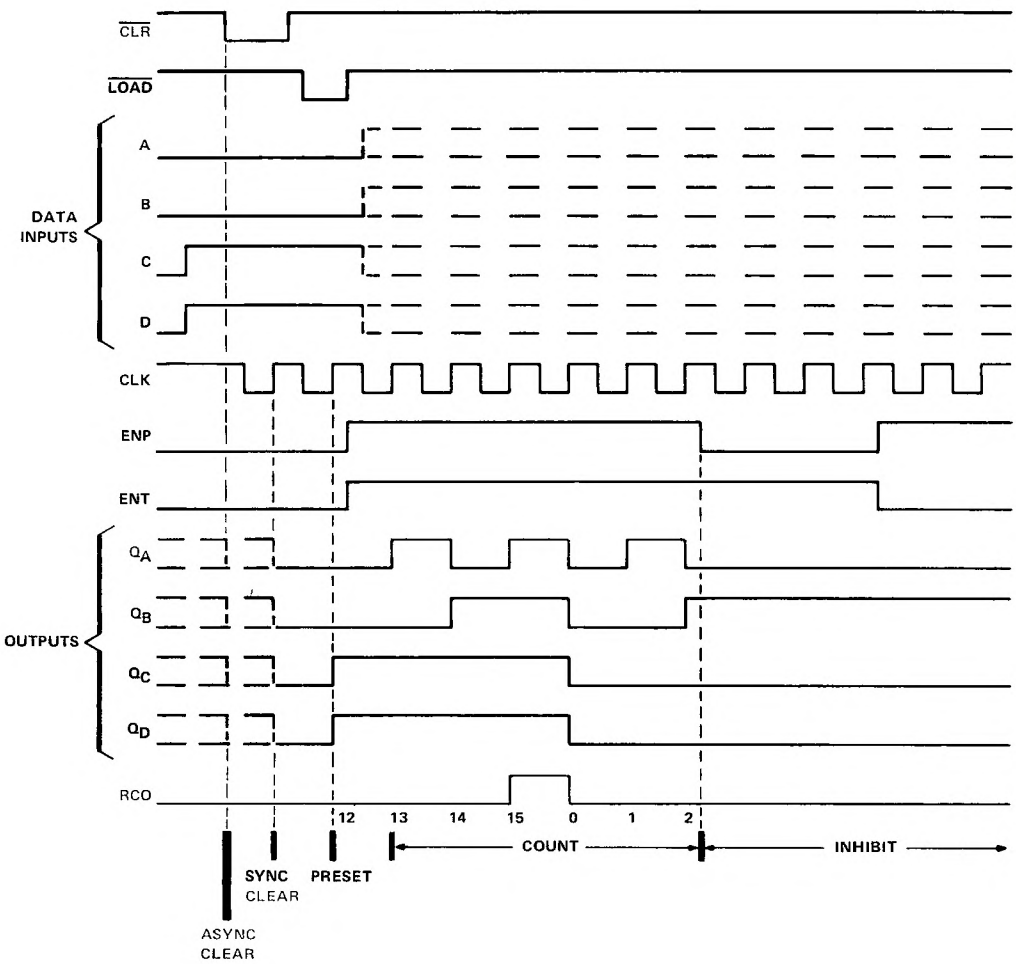

schematics of inputs and outputs

EQUIVALENT OF EACH INPUT

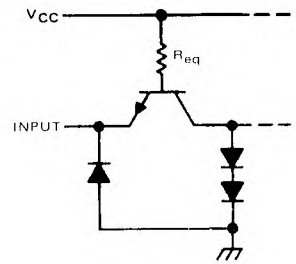

CLK R_{eq} = 2.8 kΩ NOM
ENT. R_{eq} = 2 kΩ NOM
$\overline{CLR}$, ENP: R_{eq} = 4 kΩ NOM
A, B, C, D: R_{eq} = 6 kΩ NOM

TYPICAL OF ALL OUTPUTS

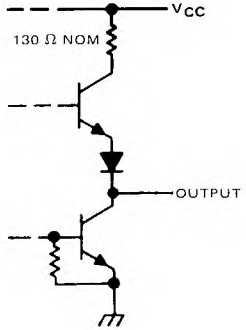

absolute maximum ratings over operating free-air temperature range (unless otherwise noted)

Supply voltage, V_{CC} (see Note 1) . . . . . 7 V
Input voltage . . . . . 5.5 V
Interemitter voltage (see Note 2) . . . . . 5.5 V
Operating free-air temperature range: SN54' Circuits . . . . . −55°C to 125°C
SN74' Circuits . . . . . 0°C to 70°C
Storage temperature range . . . . . −65°C to 150°C

NOTES: 1. Voltage values, except interemitter voltage, are with respect to network ground terminal.
2. This is the voltage between two emitters of a multiple-emitter transistor. For these circuits, this rating applies between the count enable inputs P and T.

recommended operating conditions

		SN54160, SN54161 SN54162, SN54163			SN74160, SN74161 SN74162, SN74163			UNIT
		MIN	NOM	MAX	MIN	NOM	MAX	
Supply voltage, V_{CC}		4.5	5	5.5	4.75	5	5.25	V
High-level output current, I_{OH}				−800			−800	μA
Low-level output current, I_{OL}				16			16	mA
Clock frequency, f_{clock}		0		25	0		25	MHz
Width of clock pulse, $t_{w(clock)}$		25			25			ns
Width of clear pulse, $t_{w(clear)}$		20			20			ns
Setup time, t_{su} (see Figures 1 and 2)	Inputs A, B, C, D	20			20			ns
	CLK	20			20			
	$\overline{CLR}$†	25			25			
	ENT	20			20			
Hold time at any input, t_h		0			0			ns
Operating free-air temperature, T_A		−55		125	0		70	°C

†This applies only for '162 and '163, which have synchronous clear inputs.

TEXAS INSTRUMENTS
POST OFFICE BOX 655012 • DALLAS, TEXAS 75265

electrical characteristics over recommended operating free-air temperature range (unless otherwise noted)

PARAMETER			TEST CONDITIONS†	SN54160, SN54161 SN54162, SN54163			SN74160, SN74161 SN74162, SN74163			UNIT
				MIN	TYP‡	MAX	MIN	TYP‡	MAX	
V_{IH}	High-level input voltage			2			2			V
V_{IL}	Low-level input voltage					0.8			0.8	V
V_{IK}	Input clamp voltage		V_{CC} = MIN, I_I = −12 mA			−1.5			−1.5	V
V_{OH}	High-level output voltage		V_{CC} = MIN, V_{IH} = 2 V, V_{IL} = 0.8 V, I_{OH} = −800 μA	2.4	3.4		2.4	3.4		V
V_{OL}	Low-level output voltage		V_{CC} = MIN, V_{IH} = 2 V, V_{IL} = 0.8 V, I_{OL} = 16 mA		0.2	0.4		0.2	0.4	V
I_I	Input current at maximum input voltage		V_{CC} = MAX, V_I = 5.5 V			1			1	mA
I_{IH}	High-level input current	CLK or ENT	V_{CC} = MAX, V_I = 2.4 V			80			80	μA
		Other inputs				40			40	
I_{IL}	Low-level input current	CLK or ENT	V_{CC} = MAX, V_I = 0.4 V			−3.2			−3.2	mA
		Other inputs				−1.6			−1.6	
I_{OS}	Short-circuit output current§		V_{CC} = MAX	−20		−57	−18		−57	mA
I_{CCH}	Supply current, all outputs high		V_{CC} = MAX, See Note 3		59	85		59	94	mA
I_{CCL}	Supply current, all outputs low		V_{CC} = MAX, See Note 4		63	91		63	101	mA

†For conditions shown as MIN or MAX, use the appropriate value specified under recommended operating conditions.
‡All typical values are at V_{CC} = 5 V, T_A = 25°C.
§Not more than one output should be shorted at a time.
NOTES: 3. I_{CCH} is measured with the load input high, then again with the load input low, with all other inputs high and all outputs open.
4. I_{CCL} is measured with the clock input high, then again with the clock input low, with all other inputs low and all outputs open.

switching characteristics, V_{CC} = 5 V, T_A = 25°C

PARAMETER¶	FROM (INPUT)	TO (OUTPUT)	TEST CONDITIONS	MIN	TYP	MAX	UNIT
f_{max}			C_L = 15 pF, R_L = 400 Ω, See Figures 1 and 2 and Note 5	25	32		MHz
t_{PLH}	CLK	RCO			23	35	ns
t_{PHL}					23	35	
t_{PLH}	CLK	Any			13	20	ns
t_{PHL}	($\overline{LOAD}$ input high)	Q			15	23	
t_{PLH}	CLK	Any			17	25	ns
t_{PHL}	($\overline{LOAD}$ input low)	Q			19	29	
t_{PLH}	ENT	RCO			11	16	ns
t_{PHL}					11	16	
t_{PHL}	$\overline{CLR}$	Any Q			26	38	ns

¶f_{max} = Maximum clock frequency
t_{PLH} = propagation delay time, low-to-high-level output
t_{PHL} = propagation delay time, high-to-low-level output
NOTE 5: Propagation delay for clearing is measured from the clear input for the '160 and '161 or from the clock input transition for the '162 and '163.

schematics of inputs and outputs

EQUIVALENT OF EACH INPUT

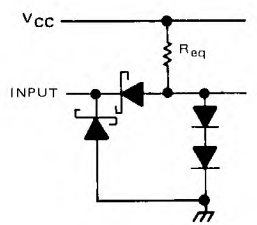

Data: R_{eq} = 25 kΩ NOM
CLK, ENT, $\overline{LOAD}$ R_{eq} = 10 kΩ NOM
ENP. R_{eq} = 20 kΩ NOM
$\overline{CLR}$ ('LS160A, 'LS161A): R_{eq} = 20 kΩ NOM
$\overline{CLR}$ ('LS162A, 'LS163A): R_{eq} = 10 kΩ NOM

TYPICAL OF ALL OUTPUTS

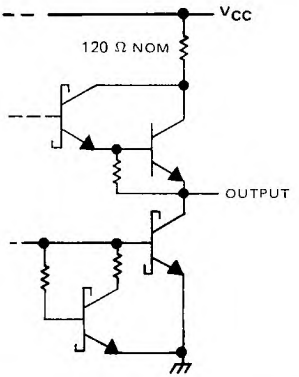

absolute maximum ratings over operating free-air temperature range (unless otherwise noted)

Supply voltage, V_{CC} (see Note 7) . . . . . 7 V
Input voltage . . . . . 7 V
Operating free-air temperature range: SN54LS' Circuits . . . . . −55°C to 125°C
SN74LS' Circuits . . . . . 0°C to 70°C
Storage temperature range . . . . . −65°C to 150°C

NOTE 7: Voltage values are with respect to network ground terminal.

recommended operating conditions

			SN54LS'			SN74LS'			UNIT
			MIN	NOM	MAX	MIN	NOM	MAX	
V_{CC}	Supply voltage		4.5	5	5.5	4.75	5	5.25	V
I_{OH}	High-level output current				−400			−400	μA
I_{OL}	Low-level output current				4			8	mA
f_{clock}	Clock frequency		0		25	0		25	MHz
$t_{w(clock)}$	Width of clock pulse		25			25			ns
$t_{w(clear)}$	Width of clear pulse		20			20			ns
t_{su}	Setup time, (see Figures 1 and 2)	Data inputs A, B, C, D	20			20			ns
		ENP or ENT	20			20			
		$\overline{LOAD}$	20			20			
		$\overline{CLR}$ inactive state	20			20			
		↓	20			20			
		$\overline{CLR}$ inactive state	25			25			
t_h	Hold time at any input		3			3			ns
T_A	Operating free-air temperature		−55		125	0		70	°C

† This applies only for 'LS162 and 'LS163, which have synchronous clear inputs.

TEXAS INSTRUMENTS
POST OFFICE BOX 655012 • DALLAS, TEXAS 75265

electrical characteristics over recommended operating free-air temperature range (unless otherwise noted)

PARAMETER		TEST CONDITIONS†		SN54LS'			SN74LS'			UNIT
				MIN	TYP‡	MAX	MIN	TYP‡	MAX	
V_{IH} High-level input voltage				2			2			V
V_{IL} Low-level input voltage						0.7			0.8	V
V_{IK} Input clamp voltage		V_{CC} = MIN,	I_I = −18 mA			−1.5			−1.5	V
V_{OH} High-level output voltage		V_{CC} = MIN, V_{IL} = V_{IL} max,	V_{IH} = 2 V, I_{OH} = −400 μA	2.5	3.4		2.7	3.4		V
V_{OL} Low-level output voltage		V_{CC} = MIN, V_{IH} = 2 V, V_{IL} = V_{IL} max	I_{OL} = 4 mA		0.25	0.4		0.25	0.4	V
			I_{OL} = 8 mA					0.35	0.5	
I_I Input current at maximum input voltage	Data or ENP	V_{CC} = MAX,	V_I = 7 V			0.1			0.1	mA
	CLK, or ENT					0.2			0.2	
	LS160A, 'LS161A)					0.1			0.1	
	CLR ('LS160A, 'LS163A)					0.2			0.2	
I_{IH} High-level input current	Data or ENP	V_{CC} = MAX,	V_I = 2.7 V			20			20	μA
	LOAD, CLK, or ENT					40			40	
	CLR ('LS160A, 'LS161A)					20			20	
	CLR ('LS162A, 'LS163A)					40			40	
I_{IL} Low-level input current	Data or ENP	V_{CC} = MAX,	V_I = 0.4 V			−0.4			−0.4	mA
	LOAD, CLK, or ENT					−0.8			−0.8	
	CLR ('LS160A, 'LS161A)					−0.4			−0.4	
	CLR ('LS162A, 'LS163A)					−0.8			−0.8	
I_{OS} Short-circuit output current§		V_{CC} = MAX		−20		−100	−20		−100	mA
I_{CCH} Supply current, all outputs high		V_{CC} = MAX,	See Note 3		18	31		18	31	mA
I_{CCL} Supply current, all outputs low		V_{CC} = MAX,	See Note 4		19	32		19	32	mA

†For conditions shown as MIN or MAX, use the appropriate value specified under recommended operating conditions.
‡All typical values are at V_{CC} = 5 V, T_A = 25°C.
§Not more than one output should be shorted at a time, and duration of the short-circuit should not exceed one second.
NOTES: 3. I_{CCH} is measured with the load input high, then again with the load input low, with all other inputs high and all outputs open.
4. I_{CCL} is measured with the clock input high, then again with the clock input low, with all other inputs low and all outputs open.

switching characteristics, V_{CC} = 5 V, T_A = 25°C

PARAMETER¶	FROM (INPUT)	TO (OUTPUT)	TEST CONDITIONS	MIN	TYP	MAX	UNIT
f_{max}			C_L = 15 pF, R_L = 2 kΩ, See figures 1 and 2 and Note 8	25	32		MHz
t_{PLH}	CLK	RCO			20	35	ns
t_{PHL}					18	35	
t_{PLH}	CLK (LOAD input high)	Any Q			13	24	ns
t_{PHL}					18	27	
t_{PLH}	CLK (LOAD input low)	Any Q			13	24	ns
t_{PHL}					18	27	
t_{PLH}	ENT	RCO			9	14	ns
t_{PHL}					9	14	
t_{PHL}	CLR	Any Q			20	28	ns

¶f_{max} = Maximum clock frequency
t_{PLH} = propagation delay time, low-to-high-level output.
t_{PHL} = propagation delay time, high-to-low-level output.
NOTE 8: Propagation delay for clearing is measured from the clear input for the 'LS160A and 'LS161A or from the clock transition for the 'LS162A and 'LS163A.

schematics of inputs and outputs

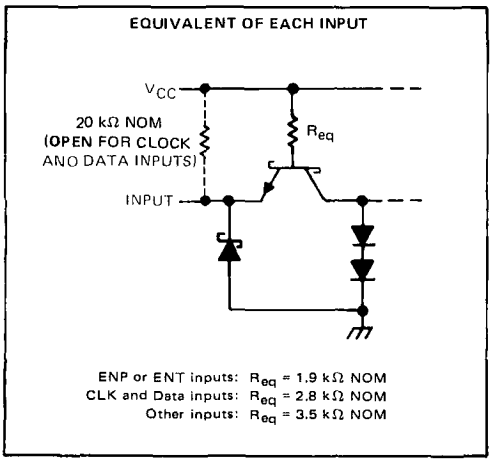

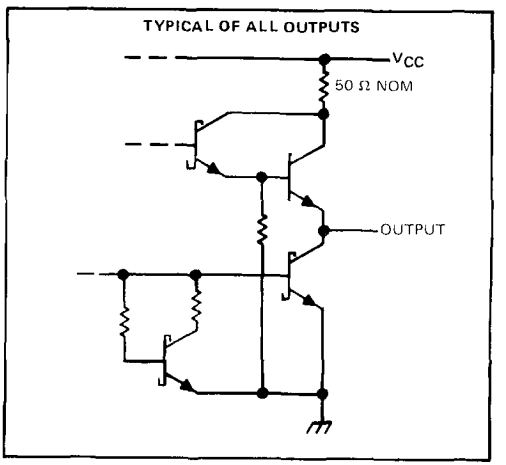

absolute maximum ratings over operating free-air temperature range (unless otherwise noted)

Supply voltage, V_{CC} (see Note 1) . . . . . 7 V
Input voltage . . . . . 5.5 V
Interemitter voltage (see Note 2) . . . . . 5.5 V
Operating free-air temperature range: SN54S162, SN54S163 (see Note 10) . . . . . −55°C to 125°C
SN74S162, SN74S163 . . . . . 0°C to 70°C
Storage temperature range . . . . . −65°C to 150°C

recommended operating conditions

		SN54S162, SN54S163			SN74S162, SN74S163			UNIT
		MIN	NOM	MAX	MIN	NOM	MAX	
Supply voltage, V_{CC}		4.5	5	5.5	4.75	5	5.25	V
High-level output current, I_{OH}				−1			−1	mA
Low-level output current, I_{OL}				20			20	mA
Clock frequency, f_{clock}		0		40	0		40	MHz
Width of clock pulse, $t_{w(clock)}$ (high or low)		10			10			ns
Width of clear pulse, $t_{w(clear)}$		10			10			ns
Setup time, t_{su} (see Figure 4)	Data inputs, A, B, C, D	4			4			ns
	ENP or ENT	12			12			
	↓	14			14			
	↑	14			14			
	LOAD inactive-state	12			12			
	CLR inactive-state	12			12			
Release time, $t_{release}$ (see Figure 4)	ENP or ENT			4			4	ns
Hold time, t_h (see Figure 4)	Data inputs A, B, C, D	3			3			ns
	↓	0			0			
	↑	0			0			
Operating free-air temperature, T_A (see Note 10)		55		125	0		70	C

NOTES. 1. Voltage values, except interemitter voltage, are with respect to network ground terminal.
2. This is the voltage between two emitters of a multiple emitter transistor. For these circuits, this rating applies between the count enable inputs P and T.
10. An SN54S162 or SN54S163 in the W package operating at free-air temperatures above 91°C requires a heat sink that provides a thermal resistance from case to free-air, $R_{\theta CA}$, of not more than 26°C/W.

TEXAS INSTRUMENTS
POST OFFICE BOX 655012 • DALLAS, TEXAS 75265

electrical characteristics over recommended operating free-air temperature range (unless otherwise noted)

PARAMETER			TEST CONDITIONS†	SN54S162 / SN54S163			SN74S162 / SN74S163			UNIT
				MIN	TYP‡	MAX	MIN	TYP‡	MAX	
V_{IH}	High-level input voltage			2			2			V
V_{IL}	Low-level input voltage					0.8			0.8	V
V_{IK}	Input clamp voltage		V_{CC} = MIN, I_I = −18 mA			−1.2			−1.2	V
V_{OH}	High-level output voltage		V_{CC} = MIN, V_{IH} = 2 V, V_{IL} = 0.8 V, I_{OH} = −1 mA	2.5	3.4		2.7	3.4		V
V_{OL}	Low-level output voltage		V_{CC} = MIN, V_{IH} = 2 V, V_{IL} = 0.8 V, I_{OL} = 20 mA			0.5			0.5	V
I_I	Input current at maximum input voltage		V_{CC} = MAX, V_I = 5.5 V			1			1	mA
I_{IH}	High-level input current	CLK and data inputs	V_{CC} = MAX, V_I = 2.7 V			50			50	µA
		Other inputs		−10		−200	−10		−200	
I_{IL}	Low-level input current	ENT	V_{CC} = MAX, V_I = 0.5 V			−4			−4	mA
		Other inputs				2			2	
I_{OS}	Short-circuit output current§		V_{CC} = MAX	−40		−100	−40		−100	mA
I_{CC}	Supply current		V_{CC} = MAX		95	160		95	160	mA

† For conditions shown as MIN or MAX, use the appropriate value specified under recommended operating conditions.
‡ All typical values are at V_{CC} = 5 V, T_A = 25°C.
§ Not more than one output should be shorted at a time, and duration of the short-circuit should not exceed one second.

switching characteristics, V_{CC} = 5 V, T_A = 25°C

PARAMETER¶	FROM (INPUT)	TO (OUTPUT)	TEST CONDITIONS	MIN	TYP	MAX	UNIT
f_{max}			C_L = 15 pF, R_L = 280 Ω, See Figures 1, 3, and 4	40	70		MHz
t_{PLH}	CLK	RCO			14	25	ns
t_{PHL}					17	25	
t_{PLH}	CLK	Any Q			8	15	ns
t_{PHL}					10	15	
t_{PLH}	ENT	RCO			10	15	ns
t_{PHL}					10	15	

¶ f_{max} ≡ maximum clock frequency
t_{PLH} ≡ propagation delay time, low-to high-level output
t_{PHL} ≡ propagation delay time, high-to low level output

PARAMETER MEASUREMENT INFORMATION

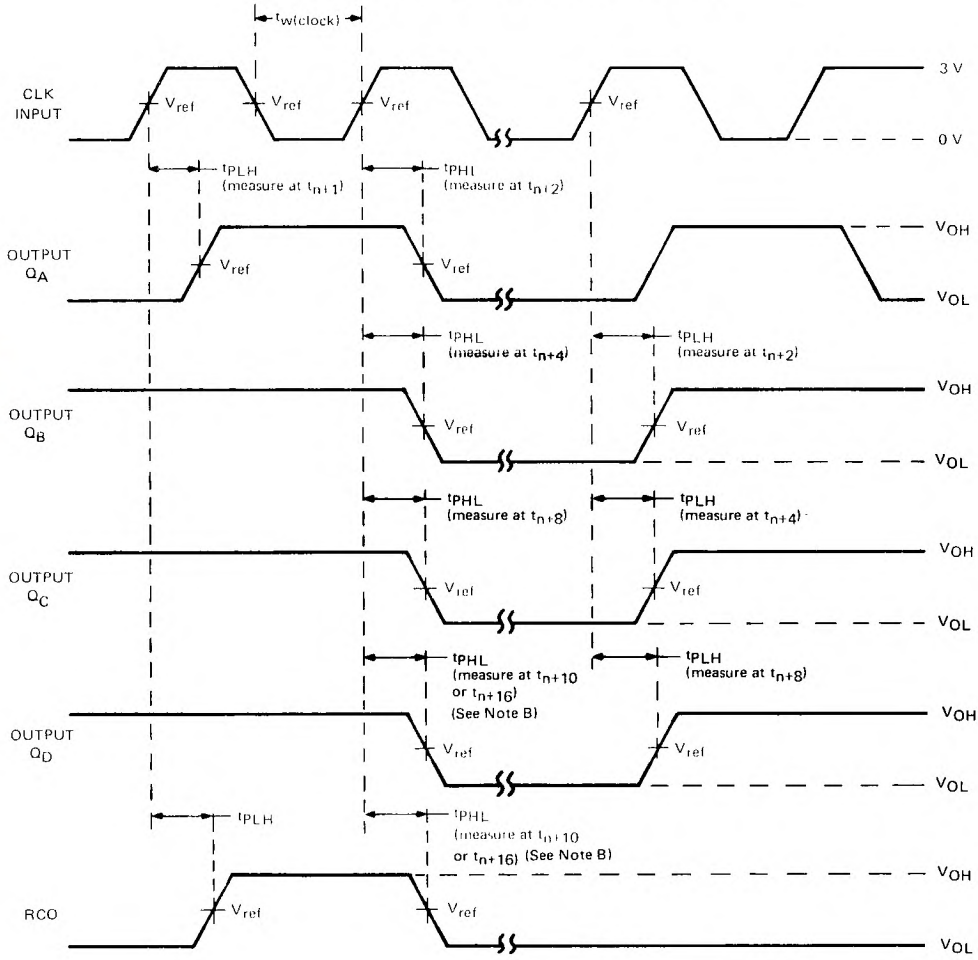

VOLTAGE WAVEFORMS

NOTES: A. The input pulses are supplied by a generator having the following characteristics: PRR ≤ 1 MHz, duty cycle ≤ 50%, $Z_{out} \approx 50\ \Omega$; for '160 thru '163, $t_r \leq 10$ ns, $t_f \leq 10$ ns, for 'LS160A thru 'LS163A, $t_r \leq 15$ ns, $t_f \leq 6$ ns; and for 'S162, 'S163, $t_r \leq 2.5$ ns, $t_f \leq 2.5$ ns. Vary PRR to measure f_{max}.

B. Outputs Q_D and carry are tested at t_{n+10} for '160, '162, 'LS160A, 'LS162A, and 'S162, and at t_{n+16} for '161, '163, 'LS161A, 'LS163A, and 'S163, where t_n is the bit time when all outputs are low.

C. For '160 thru '163, 'S162, and 'S163, $V_{ref} = 1.5$ V, for 'LS160A thru 'LS163A, $V_{ref} = 1.3$ V.

FIGURE 1–SWITCHING TIMES

TEXAS INSTRUMENTS
POST OFFICE BOX 655012 • DALLAS, TEXAS 75265

PARAMETER MEASUREMENT INFORMATION

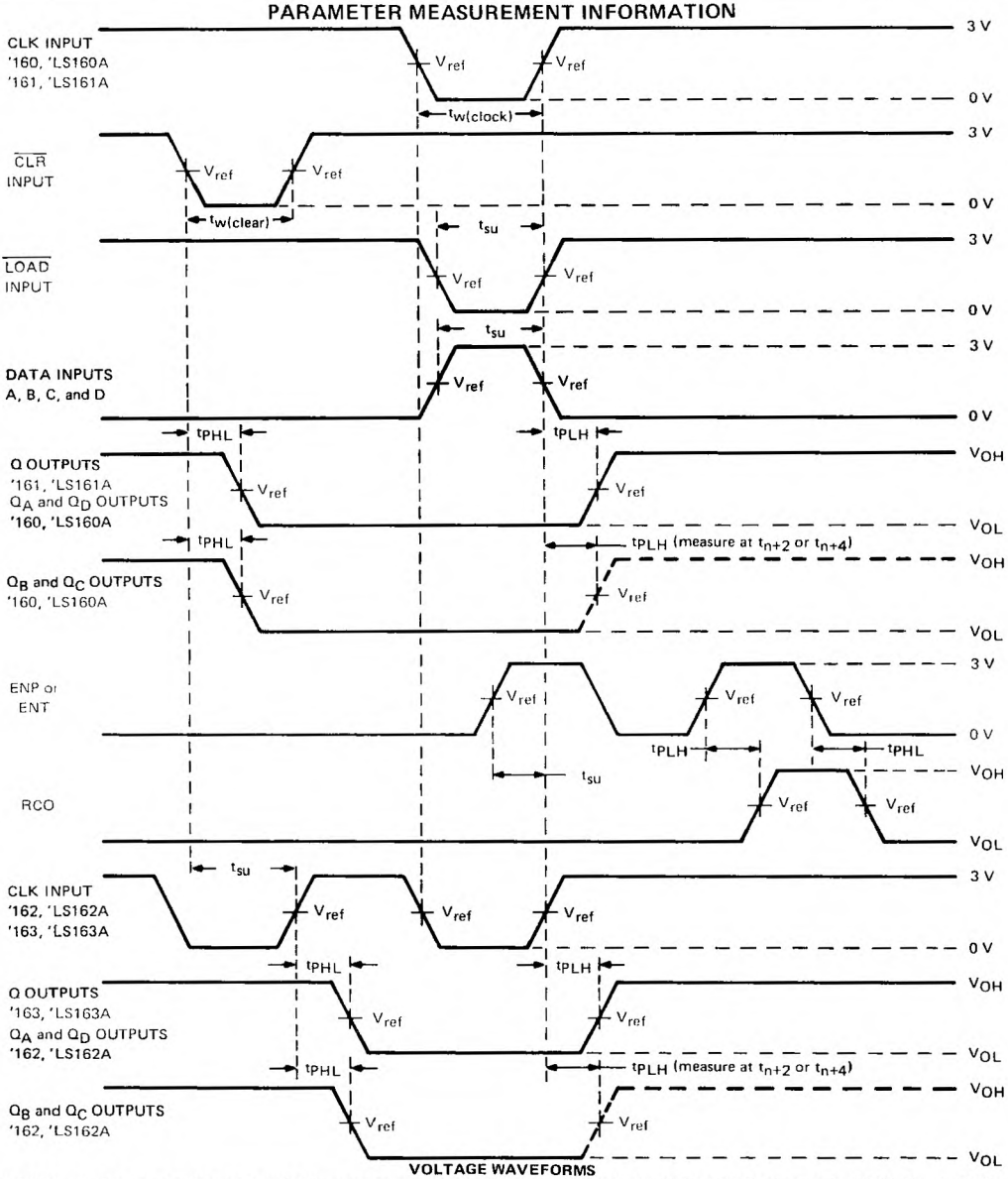

VOLTAGE WAVEFORMS

NOTES: A. The input pulses are supplied by generators having the following characteristics: PRR ⩽ 1 MHz, duty cycle ⩽ 50%, $Z_{out} \approx 50\ \Omega$; for '160 thru '163, $t_r \leqslant 10$ ns, $t_f \leqslant 10$ ns, and for 'LS160A thru 'LS163A, $t_r \leqslant 15$ ns, $t_f \leqslant 6$ ns.

B. Enable P and enable T setup times are measured at t_{n+0}.

C. For '160 thru '163, V_{ref} = 1.5 V; for 'LS160A thru 'LS163A, V_{ref} = 1.3 V.

FIGURE 2—SWITCHING TIMES

PARAMETER MEASUREMENT INFORMATION

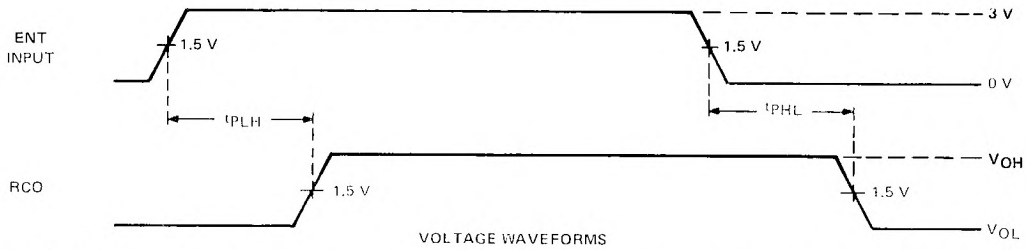

VOLTAGE WAVEFORMS

NOTES: A. The input pulse is supplied by a generator having the following characteristics: t_r = 2.5 ns, t_f = 2.5 ns, PRR = 1 MHz, duty cycle = 50%, $Z_{out} \approx 50\ \Omega$.

B. t_{PLH} and t_{PHL} from enable T input to carry output assume that the counter is at the maximum count (Q_A and Q_D high for 'S162, all Q outputs high for 'S163).

FIGURE 3–PROPAGATION DELAY TIMES FROM ENABLE T INPUT TO CARRY OUTPUT

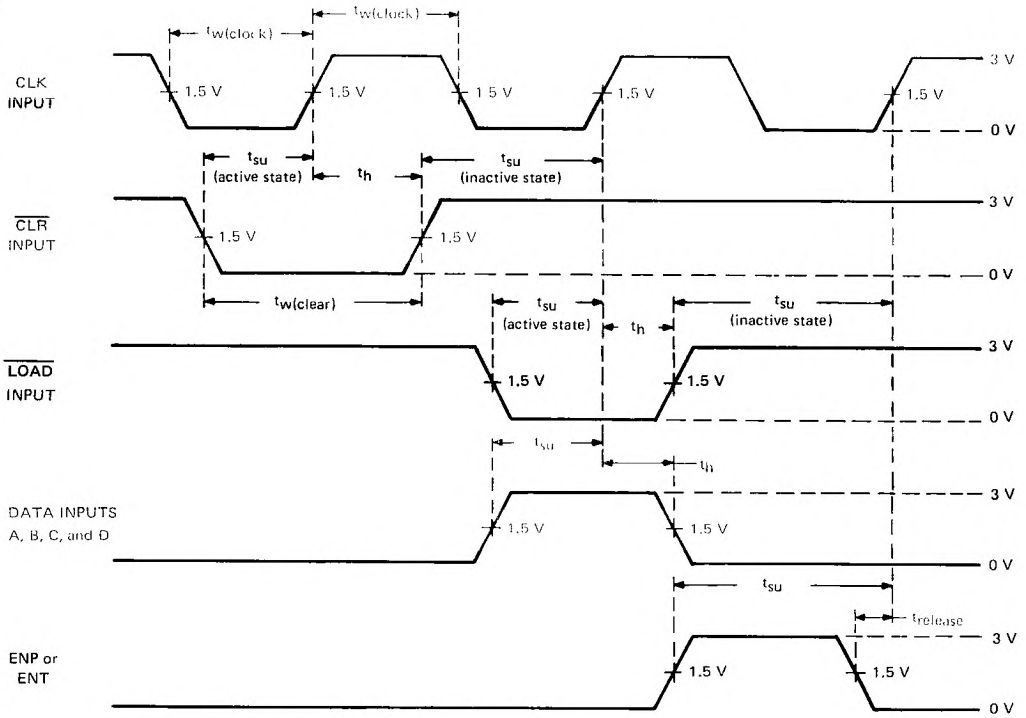

VOLTAGE WAVEFORMS

NOTE A: The input pulses are supplied by generators having the following characteristics: t_r = 2.5 ns, t_f = 2.5 ns, PRR = 1 MHz, duty cycle = 50%, $Z_{out} \approx 50\ \Omega$.

FIGURE 4–PULSE WIDTHS, SETUP TIMES, HOLD TIMES, AND RELEASE TIME

TEXAS INSTRUMENTS
POST OFFICE BOX 655012 • DALLAS, TEXAS 75265

TYPICAL APPLICATION DATA

This application demonstrates how the ripple mode carry circuit (Figure 1) and the carry-look-ahead circuit (Figure 2) can be used to implement a high-speed N-bit counter. The '160, '162, 'LS160A, 'LS162A, or 'S162 will count in BCD and the '161, '163, 'LS161A, 'LS163A, or 'S163 will count in binary. When additional stages are added the f_{MAX} decreases in Figure 1, but remains unchanged in Figure 2.

N-BIT SYNCHRONOUS COUNTERS

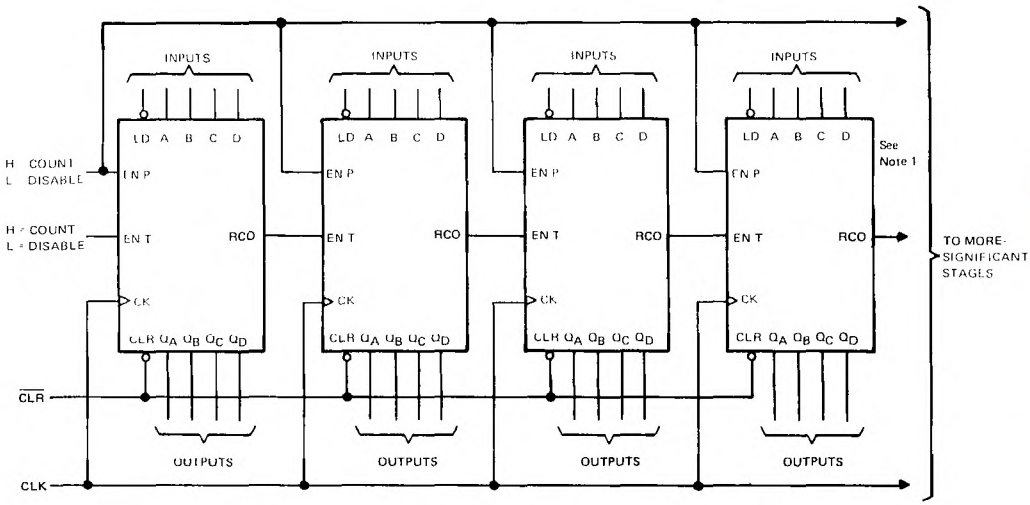

$f_{MAX} = 1/(\text{CLK to RCO } t_{PLH}) + (\text{ENT to RCO } t_{PLH})(N-2) + (\text{ENT } t_{su})$

FIGURE 1

TYPICAL APPLICATION DATA

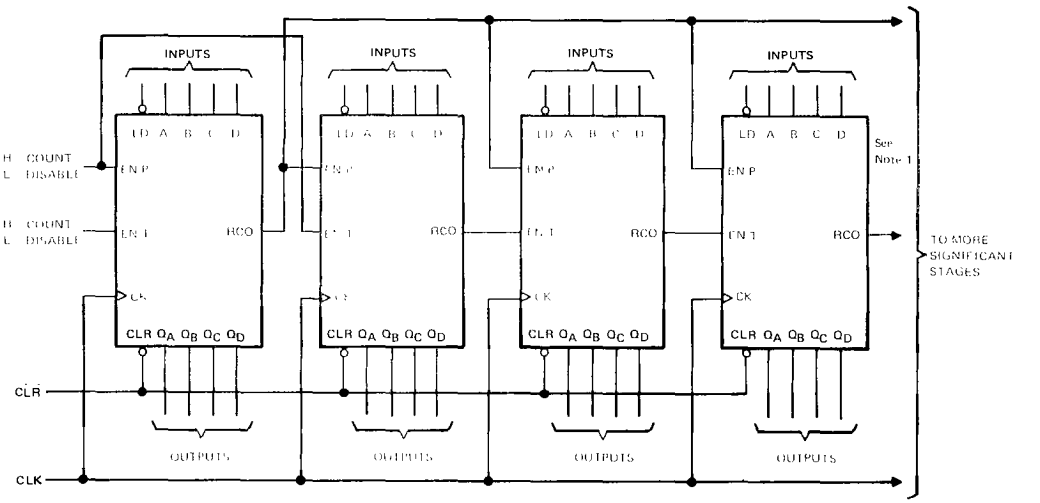

$f_{MAX} = 1/(\text{CLK to RCO } t_{PLH}) + (\text{ENP } t_{su})$

FIGURE 2

MARCH 1974 – RE' 'MARCH 1988

- **Gated Serial Inputs**
- **Fully Buffered Clock and Serial Inputs**
- **Asynchronous Clear**

TYPE	TYPICAL MAXIMUM CLOCK FREQUENCY	TYPICAL POWER DISSIPATION
'164	36 MHz	21 mW per bit
'LS164	36 MHz	10 mW per bit

SN54164, SN54LS164 . . . J OR W PACKAGE
SN74164 . . . N PACKAGE
SN74LS164 . . . D OR N PACKAGE
(TOP VIEW)

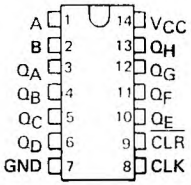

SN54LS164 . . . FK PACKAGE
(TOP VIEW)

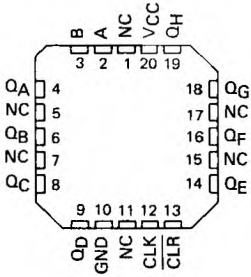

NC – No internal connection

description

These 8-bit shift registers feature gated serial inputs and an asynchronous clear. The gated serial inputs (A and B) permit complete control over incoming data as a low at either input inhibits entry of the new data and resets the first flip-flop to the low level at the next clock pulse. A high-level input enables the other input which will then determine the state of the first flip-flop. Data at the serial inputs may be changed while the clock is high or low, but only information meeting the setup-time requirements will be entered. Clocking occurs on the low-to-high-level transition of the clock input. All inputs are diode-clamped to minimize transmission-line effects.

The SN54164 and SN54LS164 are characterized for operation over the full military temperature range of −55°C to 125°C. The SN74164 and SN74LS164 are characterized for operation from 0°C to 70°C.

FUNCTION TABLE

INPUTS				OUTPUTS			
CLEAR	CLOCK	A	B	Q_A	Q_B	...	Q_H
L	X	X	X	L	L		L
H	L	X	X	Q_{A0}	Q_{B0}		Q_{H0}
H	↑	H	H	H	Q_{An}		Q_{Gn}
H	↑	L	X	L	Q_{An}		Q_{Gn}
H	↑	X	L	L	Q_{An}		Q_{Gn}

H = high level (steady state), L = low level (steady state)
X = irrelevant (any input, including transitions)
↑ = transition from low to high level.
Q_{A0}, Q_{B0}, Q_{H0} = the level of Q_A, Q_B, or Q_H, respectively, before the indicated steady-state input conditions were established.
Q_{An}, Q_{Gn} = the level of Q_A or Q_G before the most-recent ↑ transition of the clock; indicates a one-bit shift.

schematics of inputs and outputs

'164

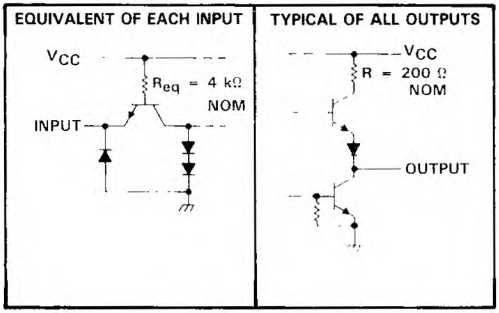

'LS164

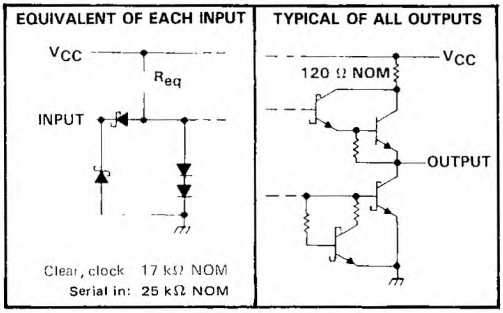

typical clear, shift, and clear sequences

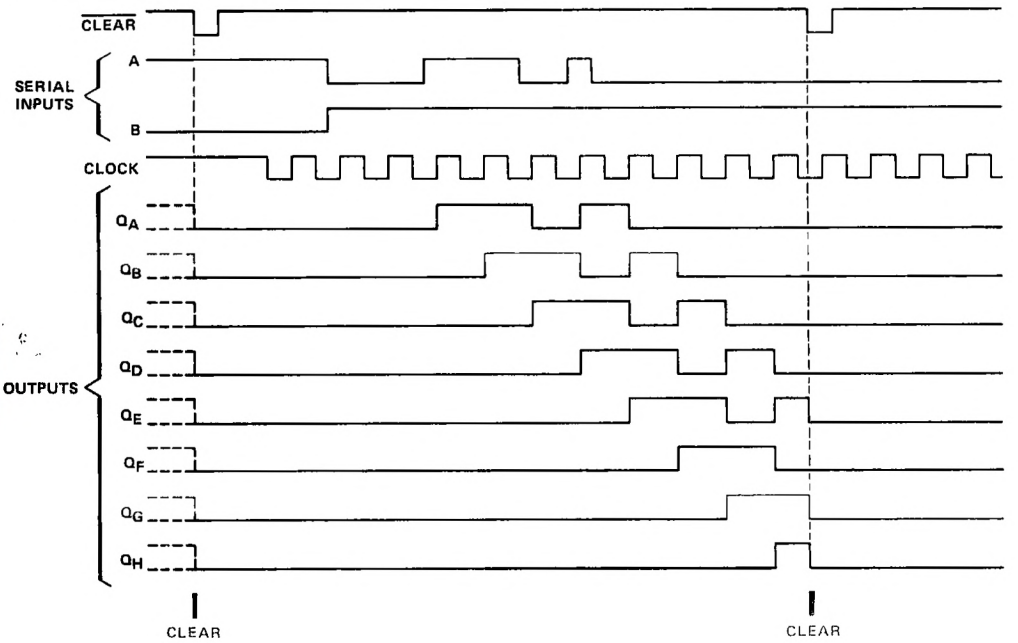

logic symbol†

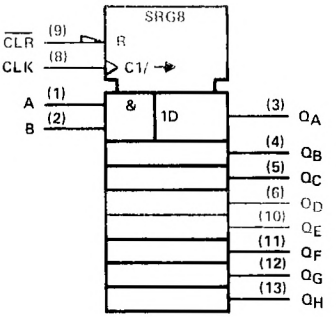

†This symbol is in accordance with ANSI/IEEE Std. 91-1984 and IEC Publication 617-12.
Pin numbers shown are for D, J, N, and W packages.

TEXAS INSTRUMENTS
POST OFFICE BOX 655012 • DALLAS, TEXAS 75265

logic diagram (positive logic)

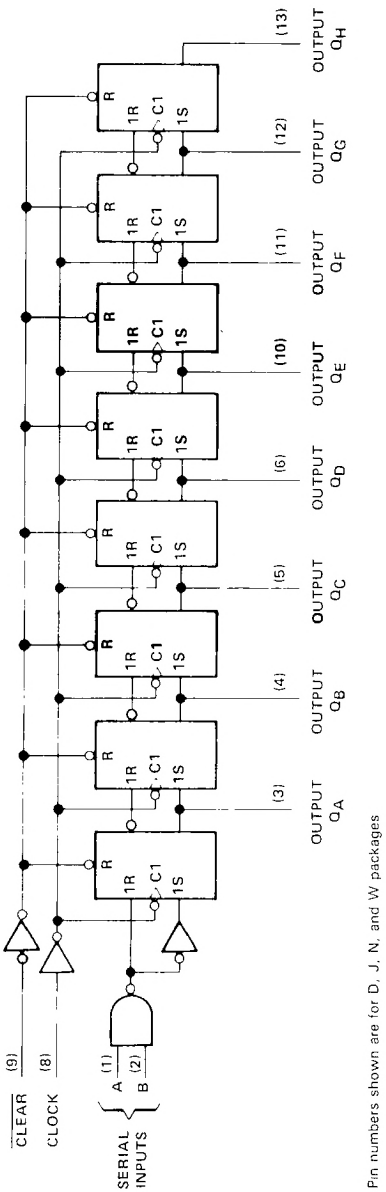

Pin numbers shown are for D, J, N, and W packages

absolute maximum ratings over oprating free-air temperature range (unless otherwise noted)

Supply voltage, V_{CC} (see Note 1) . . . . . 7 V
Input voltage . . . . . 5.5 V
Operating free-air temperature range: SN54164 . . . . . −55°C to 125°C
SN74164 . . . . . 0°C to 70°C
Storage temperature range . . . . . −65°C to 150°C

NOTE 1: Voltage values are with respect to network ground terminal.

recommended operating conditions

	SN54164			SN74164			UNIT
	MIN	NOM	MAX	MIN	NOM	MAX	
Supply voltage, V_{CC}	4.5	5	5.5	4.75	5	5.25	V
High-level output current, I_{OH}			−400			−400	μA
Low-level output current, I_{OL}			8			8	mA
Clock frequency, f_{clock}	0		25	0		25	MHz
Width of clock or clear input pulse, t_w	20			20			ns
Data setup time, t_{su} (see Figure 1)	15			15			ns
Data setup time, t_{su} · Inactive) (see Figure 1)	20			20			ns
Data hold time, t_h (See Figure 1)	5			5			ns
Operating free-air temperature, T_A	−55			0		70	°C

electrical characteristics over recommended operating free-air temperature range (unless otherwise noted)

PARAMETER		TEST CONDITIONS†		SN54164			SN74164			UNIT
				MIN	TYP‡	MAX	MIN	TYP‡	MAX	
V_{IH}	High-level input voltage			2			2			V
V_{IL}	Low-level input voltage					0.8			0.8	V
V_{IK}	Input clamp voltage	V_{CC} = MIN, I_I = −12 mA				−1.5			−1.5	V
V_{OH}	High-level output voltage	V_{CC} = MIN, V_{IH} = 2 V, V_{IL} = 0.8 V, I_{OH} = −400 μA		2.4	3.2		2.4	3.2		V
V_{OL}	Low-level output voltage	V_{CC} = MIN, V_{IH} = 2 V, V_{IL} = 0.8 V, I_{OL} = 8 mA			0.2	0.4		0.2	0.4	V
I_I	Input current at maximum input voltage	V_{CC} = MAX, V_I = 5.5 V				1			1	mA
I_{IH}	High-level input current	V_{CC} = MAX, V_I = 2.4 V				40			40	μA
I_{IL}	Low-level input current	V_{CC} = MAX, V_I = 0.4 V				−1.6			−1.6	mA
I_{OS}	Short-circuit output current§	V_{CC} = MAX		−10		−27.5	−9		−27.5	mA
I_{CC}	Supply current	V_{CC} = MAX, See Note 2	$V_{I(clock)}$ = 0.4 V		30			30		mA
			$V_{I(clock)}$ = 2.4 V		37	54		37	54	

† For conditions shown at MIN or MAX, use the appropriate value specified under recommended operating conditions.
‡ All typical values are at V_{CC} = 5 V, T_A = 25°C.
§ Not more than two outputs should be shorted at a time.
NOTE 2: I_{CC} is measured with outputs open, serial inputs grounded, and a momentary ground, then 4.5 V, applied to clear.

switching characteristics, V_{CC} = 5 V, T_A = 25°C

PARAMETER		TEST CONDITIONS		MIN	TYP	MAX	UNIT
f_{max}	Maximum clock frequency	R_L = 800 Ω, See Figure 1	C_L = 15 pF	25	36		MHz
t_{PHL}	Propagation delay time, high-to-low-level Q outputs from clear input		C_L = 15 pF		24	36	ns
			C_L = 50 pF		28	42	
t_{PLH}	Propagation delay time, low-to-high-level Q outputs from clock input		C_L = 15 pF	8	17	27	ns
			C_L = 50 pF	10	20	30	
t_{PHL}	Propagation delay time, high-to-low-level Q outputs from the clock input		C_L = 15 pF	10	21	32	ns
			C_L = 50 pF	10	25	37	

TEXAS INSTRUMENTS
POST OFFICE BOX 655012 • DALLAS, TEXAS 75265

absolute maximum ratings over operating free-air temperature range (unless otherwise noted)

Supply voltage, V_{CC} (see Note 1) . . . . . 7 V
Input voltage . . . . . 7 V
Operating free-air temperature range: SN54LS164 . . . . . −55°C to 125°C
SN74LS164 . . . . . 0°C to 70°C
Storage temperature range . . . . . −65°C to 150°C

NOTE 1: Voltage values are with respect to network ground terminal.

recommended operating conditions

		SN54LS164			SN74LS164			UNIT
		MIN	NOM	MAX	MIN	NOM	MAX	
V_{CC}	Supply voltage	4.5	5	5.5	4.75	5	5.25	V
V_{IH}	High-level input voltage	2			2			V
V_{IL}	Low-level input voltage			0.7			0.8	V
I_{OH}	High-level output current			−0.4			−0.4	mA
I_{OL}	Low-level output current			4			8	mA
f_{clock}	Clock frequency	0		25	0		25	MHz
t_w	Width of clock or clear input pulse	20			20			ns
t_{su}	Data setup time (See Figure 1)	15			15			ns
t_{su}	Clear inactive setup time (See Figure 1)	20			20			ns
t_h	Data hold time (See Figure 1)	5			5			ns
T_A	Operating free-air temperature	−55		125	0		70	°C

electrical characteristics over recommended operating free-air temperature range (unless otherwise noted)

PARAMETER	TEST CONDITIONS†		SN54LS164			SN74LS164			UNIT
			MIN	TYP‡	MAX	MIN	TYP‡	MAX	
V_{IK}	V_{CC} = MIN, I_I = −18 mA				−1.5			−1.5	V
V_{OH}	V_{CC} = MIN, V_{IH} = 2 V, V_{IL} = MAX, I_{OH} = −0.4 mA		2.5	3.5		2.7	3.5		V
V_{OL}	V_{CC} = MIN, V_{IH} = 2 V, V_{IL} = MAX	I_{OL} = 4 mA		0.25	0.4		0.25	0.4	V
		I_{OL} = 8 mA					0.35	0.5	
I_I	V_{CC} = MAX, V_I = 7 V				0.1			0.1	mA
I_{IH}	V_{CC} = MAX, V_I = 2.7 V			20			20		μA
I_{IL}	V_{CC} = MAX, V_I = 0.4 V				−0.4			−0.4	mA
I_{OS}	V_{CC} = MAX		−20		−100	−20		−100	mA
I_{CC}	V_{CC} = MAX, See Note 3			16	27		16	27	mA

†For conditions shown as MIN or MAX, use the appropriate value specified under recommended operating conditions.
‡All typical values are at V_{CC} = 5 V, T_A = 25°C.
§Not more than one output should be shorted at a time, and duration of the short-circuit should not exceed one second.
NOTE 3: I_{CC} is measured with outputs open, serial inputs grounded, the clock input at 2.4 V, and a momentary ground, then 4.5 V applied to clear.

switching characteristics, V_{CC} = 5 V, T_A = 25°C

PARAMETER		TEST CONDITIONS	MIN	TYP	MAX	UNIT
f_{max}	Maximum clock frequency	R_L = 2 kΩ, C_L = 15 pF, See Figure 1	25	36		MHz
t_{PHL}	Propagation delay time, high-to-low-level Q outputs from clear input			24	36	ns
t_{PLH}	Propagation delay time, low-to-high-level Q outputs from clock input			17	27	ns
t_{PHL}	Propagation delay time, high-to-low-level Q outputs from clock input			21	32	ns

PARAMETER MEASUREMENT INFORMATION

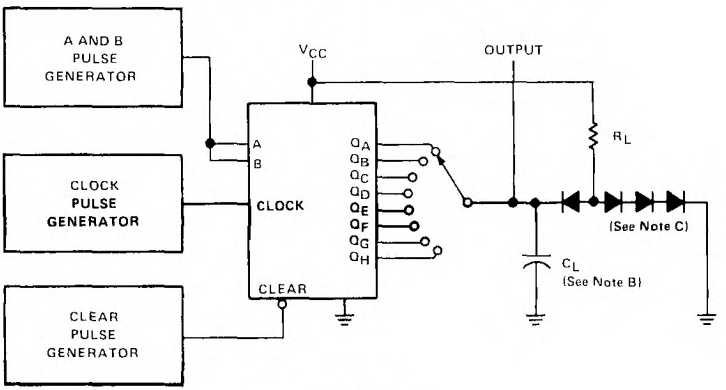

TEST CIRCUIT

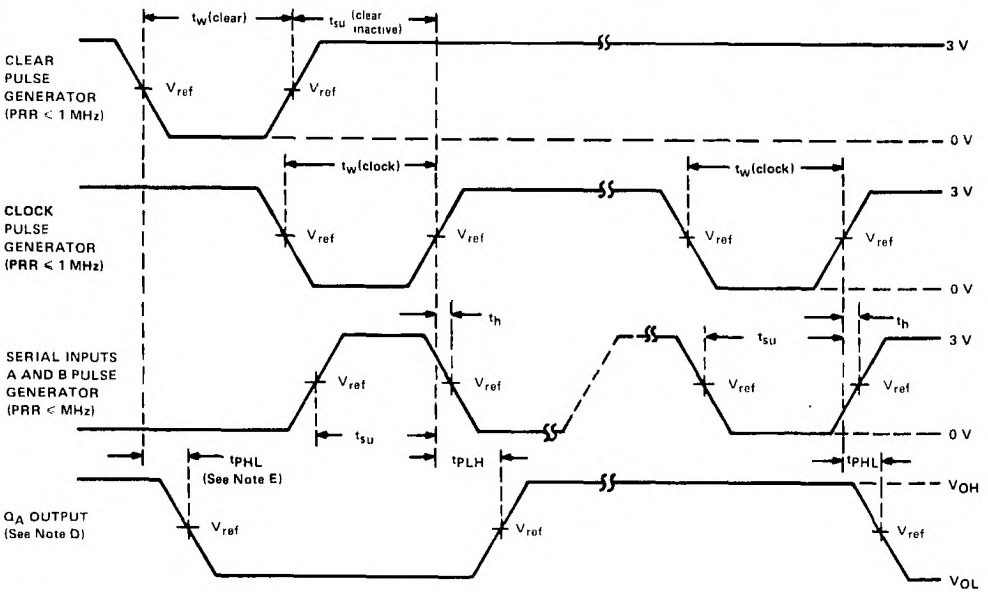

VOLTAGE WAVEFORMS

NOTES: A. The pulse generators have the following characteristics: duty cycle ≤ 50%, $Z_{out} \approx 50\ \Omega$; for '164, $t_r \leq 10$ ns, $t_f \leq 10$ ns; and for 'LS164, $t_r \leq 15$ ns, $t_f \leq 6$ ns.

B. C_L includes probe and jig capacitance.

C. All diodes are 1N3064 or equivalent.

D. Q_A output is illustrated. Relationship of serial input A and B data to other Q outputs is illustrated in the typical shift sequence.

E. Outputs are set to the high level prior to the measurement of t_{PHL} from the clear input.

F. For '164, V_{ref} = 1.5 V; for 'LS164, V_{ref} = 1.3 V.

FIGURE 1–SWITCHING TIMES

TEXAS INSTRUMENTS
POST OFFICE BOX 655012 • DALLAS, TEXAS 75265

OCTOBER 1976 – REVISED MARCH 1988

- **Complementary Outputs**
- **Direct Overriding Load (Data) Inputs**
- **Gated Clock Inputs**
- **Parallel-to-Serial Data Conversion**

TYPE	TYPICAL MAXIMUM CLOCK FREQUENCY	TYPICAL POWER DISSIPATION
'165	26 MHz	210 mW
'LS165A	35 MHz	90 mW

description

The '165 and 'LS165A are 8-bit serial shift registers that shift the data in the direction of Q_A toward Q_H when clocked. Parallel-in access to each stage is made available by eight individual direct data inputs that are enabled by a low level at the shift/load input. These registers also feature gated clock inputs and complementary outputs from the eighth bit. All inputs are diode-clamped to minimize transmission-line effects, thereby simplifying system design.

Clocking is accomplished through a 2-input positive-NOR gate, permitting one input to be used as a clock-inhibit function. Holding either of the clock inputs high inhibits clocking and holding either clock input low with the shift/load input high enables the other clock input. The clock-inhibit input should be changed to the high level only while the clock input is high. Parallel loading is inhibited as long as the shift/load input is high. Data at the parallel inputs are loaded directly into the register while the shift/load input is low independently of the levels of the clock, clock inhibit, or serial inputs.

FUNCTION TABLE

INPUTS					INTERNAL OUTPUTS		OUTPUT
SHIFT/$\overline{\text{LOAD}}$	CLOCK INHIBIT	CLOCK	SERIAL	PARALLEL A . . . H	$\overline{Q}_A$	$\overline{Q}_B$	Q_H
L	X	X	X	a . . . h	a	b	h
H	L	L	X	X	Q_{A0}	Q_{B0}	Q_{H0}
H	L	↑	H	X	H	Q_{An}	Q_{Gn}
H	L	↑	L	X	L	Q_{An}	Q_{Gn}
H	H	X	X	X	Q_{A0}	Q_{B0}	Q_{H0}

SN54165, SN54LS165A . . . J OR W PACKAGE
SN74165 . . . N PACKAGE
SN74LS165A . . . D OR N PACKAGE
(TOP VIEW)

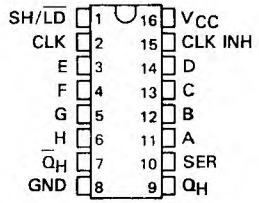

SN54LS165A . . . FK PACKAGE
(TOP VIEW)

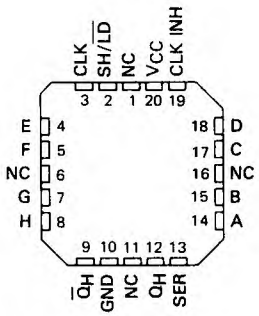

logic symbol†

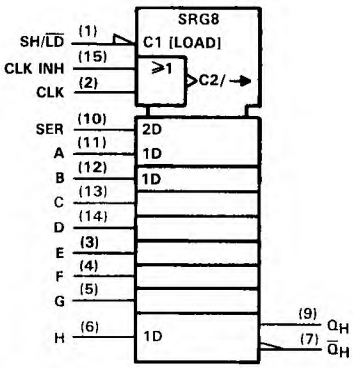

†This symbol is in accordance with ANSI/IEEE Std. 91-1984 and IEC Publication 617-12.
Pin numbers shown are for D, J, N, and W packages.

PRODUCTION DATA documents contain information current as of publication date. Products conform to specifications per the terms of Texas Instruments standard warranty. Production processing does not necessarily include testing of all parameters.

schematics of inputs and outputs

'165

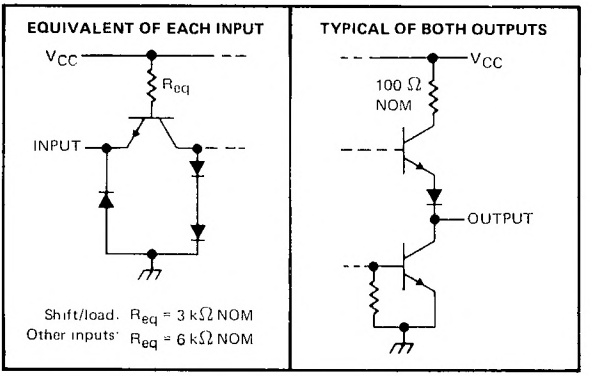

'LS165A

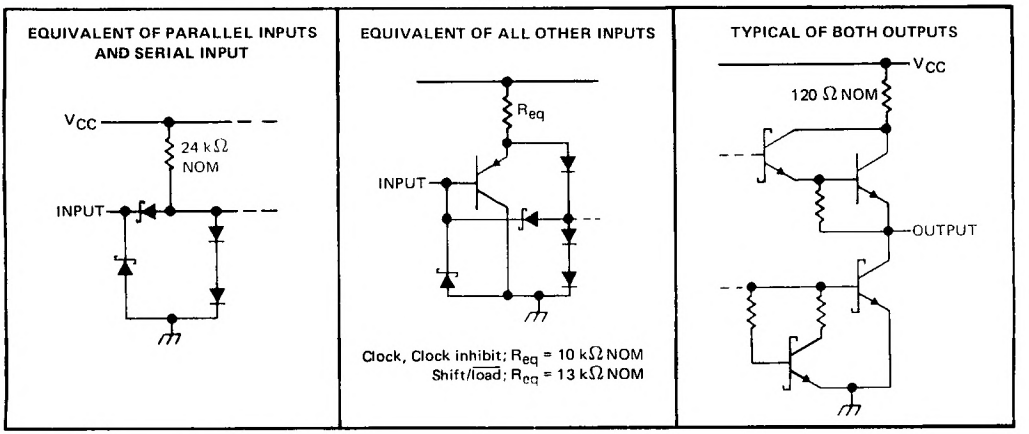

TEXAS INSTRUMENTS
POST OFFICE BOX 655012 • DALLAS, TEXAS 75265

logic diagram (positive logic)

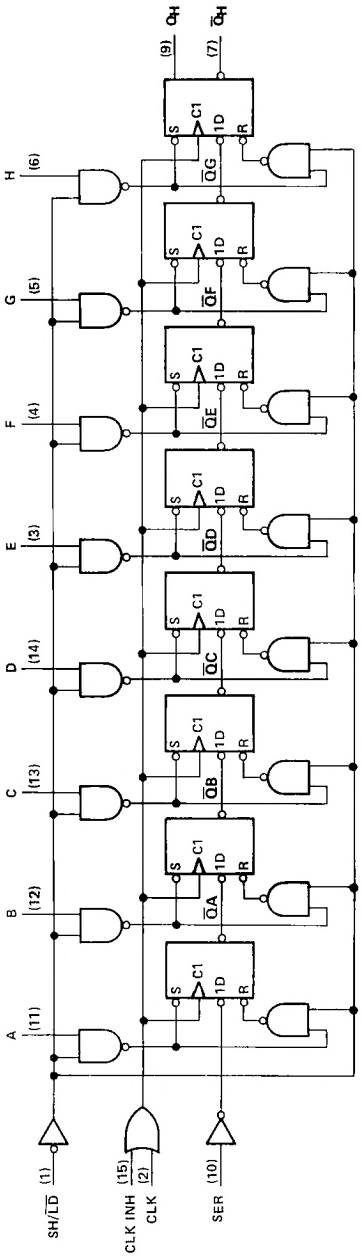

Pin numbers shown are for D, J, N, and W packages.

typical shift, load, and inhibit sequences

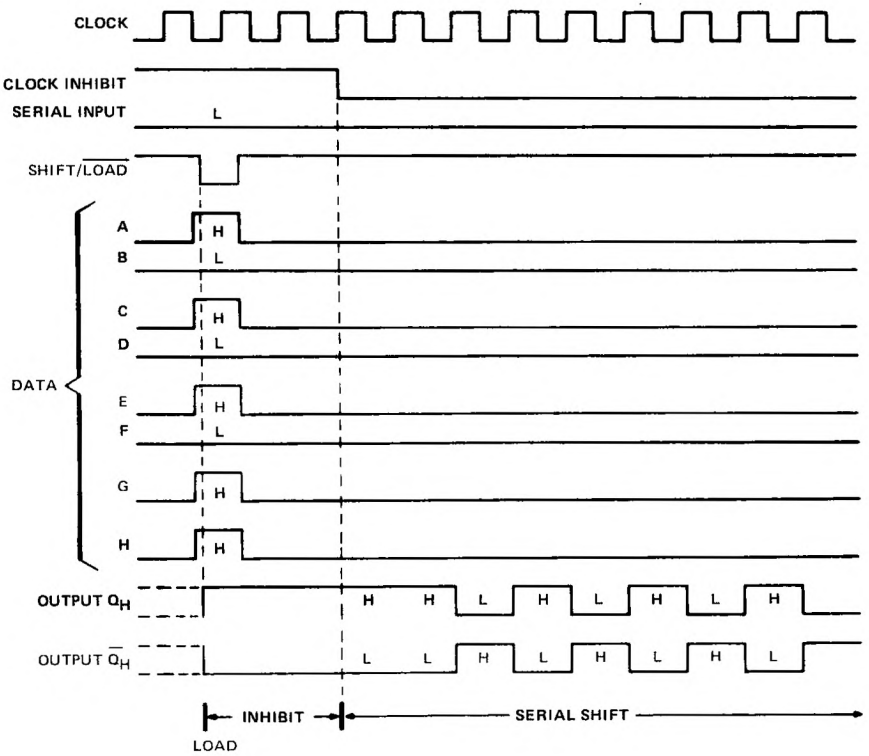

absolute maximum ratings over operating free-air temperature range (unless otherwise noted)

Supply voltage, V_{CC} (see Note 1) . . . . . 7 V
Input voltage: SN54165, SN74165 . . . . . 5.5 V
SN54LS165A, SN74LS165A . . . . . 7 V
Interemitter voltage (see Note 2) . . . . . 5.5 V
Operating free-air temperature range: SN54165, SN54LS165A . . . . . −55°C to 125°C
SN74165, SN74LS165A . . . . . 0°C to 70°C
Storage temperature range . . . . . −65°C to 150°C

NOTES 1. Voltage values, except interemitter voltage, are with respect to network ground terminal.
2. This is the voltage between two emitters of a multiple-emitter transistor. This rating applies for the '165 to the shift/load input in conjunction with the clock-inhibit inputs.

TEXAS INSTRUMENTS
POST OFFICE BOX 655012 • DALLAS, TEXAS 75265

recommended operating conditions

	SN54165			SN74165			UNIT
	MIN	NOM	MAX	MIN	NOM	MAX	
Supply voltage, V_{CC}	4.5	5	5.5	4.75	5	5.25	V
High-level output current, I_{OH}			−800			−800	μA
Low-level output current, I_{OL}			16			16	mA
Clock frequency, f_{clock}	0		20	0		20	MHz
Width of clock input pulse, $t_{w(clock)}$	25			25			ns
Width of load input pulse, $t_{w(load)}$	15			15			ns
Clock-enable setup time, t_{su} (see Figure 1)	30			30			ns
Parallel input setup time, t_{su} (see Figure 1)	10			10			ns
Serial input setup time, t_{su} (see Figure 2)	20			20			ns
Shift setup time, t_{su} (see Figure 2)	45			45			ns
Hold time at any input, t_h	0			0			ns
Operating free-air temperature, T_A	−55		125	0		70	°C

electrical characteristics over recommended operating free-air temperature range (unless otherwise noted)

PARAMETER			TEST CONDITIONS†	SN54165			SN74165			UNIT
				MIN	TYP‡	MAX	MIN	TYP‡	MAX	
V_{IH}	High-level input voltage			2			2			V
V_{IL}	Low-level input voltage					0.8			0.8	V
V_{IK}	Input clamp voltage		V_{CC} = MIN, I_I = −12 mA			−1.5			−1.5	V
V_{OH}	High-level output voltage		V_{CC} = MIN, V_{IH} = 2 V, V_{IL} = 0.8 V, I_{OH} = −800 μA	2.4	3.4		2.4	3.4		V
V_{OL}	Low-level output voltage		V_{CC} = MIN, V_{IH} = 2 V, V_{IL} = 0.8 V, I_{OL} = 16 mA		0.2	0.4		0.2	0.4	V
I_I	Input current at maximum input voltage		V_{CC} = MAX, V_I = 5.5 V			1			1	mA
I_{IH}	High-level input current	Shift/$\overline{\text{load}}$	V_{CC} = MAX, V_I = 2.4 V			80			80	μA
		Other inputs				40			40	
I_{IL}	Low-level input current	Shift	V_{CC} = MAX, V_I = 0.4 V			−3.2			−3.2	mA
		Other inputs				−1.6			−1.6	
I_{OS}	Short-circuit output current§		V_{CC} = MAX	−20		−55	−18		−55	mA
I_{CC}	Supply current		V_{CC} = MAX, See Note 3		42	63		42	63	mA

NOTE 3: With the outputs open, clock inhibit and clock at 4.5 V, and a clock pulse applied to the shift/load input, I_{CC} is measured first with the parallel inputs at 4.5 V, then with the parallel inputs grounded.

†For conditions shown as MIN or MAX, use the appropriate value specified under recommended operating conditions.

‡All typical values are at V_{CC} = 5 V, T_A = 25°C.

§Not more than one output should be shorted at a time.

switching characteristics, V_{CC} = 5 V, T_A = 25°C

PARAMETER¶	FROM (INPUT)	TO (OUTPUT)	TEST CONDITIONS	MIN	TYP	MAX	UNIT
f_{max}			C_L = 15 pF, R_L = 400 Ω, See figures 1 thru 3	20	26		MHz
t_{PLH}	$\overline{\text{Load}}$	Any			21	31	ns
t_{PHL}					27	40	
t_{PLH}	Clock	Any			16	24	ns
t_{PHL}					21	31	
t_{PLH}	H	Q_H			11	17	ns
t_{PHL}					24	36	
t_{PLH}	H	$\overline{Q}_H$			18	27	ns
t_{PHL}					18	27	

¶f_{max} ≡ maximum clock frequency
t_{PLH} ≡ propagation delay time, low-to-high-level output
t_{PHL} ≡ propagation delay time, high-to-low-level output

recommended operating conditions

			SN54LS165A			SN74LS165A			UNIT
			MIN	NOM	MAX	MIN	NOM	MAX	
V_{CC}	Supply voltage		4.5	5	5.5	4.75	5	5.25	V
V_{IH}	High-level input voltage		2			2			V
V_{IL}	Low-level input voltage				0.7			0.8	V
I_{OH}	High-level output current				−0.4			−0.4	mA
I_{OL}	Low-level output current				4			8	mA
f_{clock}	Clock frequency		0		25	0		25	MHz
t_w(clock)	Width of clock input pulse (See Figure 1)	clock high	15			15			ns
		clock low	25			25			
t_w(load)	Width of load input pulse	clock high	25			25			ns
		clock low	17			17			
t_{su}	Clock-enable setup time (See Figure 1)		30			30			ns
t_{su}	Parallel input setup time (See Figure 1)		10			10			ns
t_{su}	Serial input setup time (See Figure 2)		20			20			ns
t_{su}	Shift setup time (See Figure 2)		45			45			ns
t_h	Hold time at any input		0			0			ns
T_A	Operating free-air temperature		−55		125	0		70	°C

electrical characteristics over recommended operating free-air temperature range (unless otherwise noted)

PARAMETER	TEST CONDITIONS		SN54LS165A			SN74LS165A			UNIT
			MIN	TYP‡	MAX	MIN	TYP‡	MAX	
V_{IK}	V_{CC} = MIN, I_I = −18 mA				−1.5			−1.5	V
V_{OH}	V_{CC} = MIN, V_{IH} = 2 V, V_{IL} = MAX, I_{OH} = −0.4 mA		2.5	3.5		2.7	3.5		V
V_{OL}	V_{CC} = MIN, V_{IH} = 2 V, V_{IL} = MAX,	I_{OL} = 4 mA		0.25	0.4		0.25	0.4	V
		I_{OL} = 8 mA					0.35	0.5	
I_I	V_{CC} = MAX, V_I = 7 V				0.1			0.1	mA
I_{IH}	V_{CC} = MAX, V_I = 2.7 V				20			20	μA
I_{IL}	V_{CC} = MAX, V_I = 0.4 V				−0.4			−0.4	mA
I_{OS}§	V_{CC} = MAX		−20		−100	−20		−100	mA
I_{CC}	V_{CC} = MAX, See Note 3			18	30		18	30	mA

NOTE 3 With the outputs open, clock inhibit and clock at 4.5 V, and a clock pulse applied to the shift load input, I_{CC} is measured first with the parallel inputs at 4.5 V, then with the parallel inputs grounded

† For conditions shown as MIN or MAX, use the appropriate value specified under recommended operating conditions

‡ All typical values are at V_{CC} = 5 V, T_A = 25°C.

§ Not more than one output should be shorted at a time, and the duration of the short circuit should not exceed one second.

switching characteristics, V_{CC} = 5 V, T_A = 25°C

PARAMETER¶	FROM (INPUT)	TO (OUTPUT)	TEST CONDITIONS	MIN	TYP	MAX	UNIT
f_{max}			R_L = 2 kΩ, C_L = 15 pF, See Figures 1 thru 3	25	35		MHz
t_{PLH}	$\overline{Load}$	Any			21	35	ns
t_{PHL}					26	35	
t_{PLH}	Clock	Any			14	25	ns
t_{PHL}					16	25	
t_{PLH}	H	Q_H			13	25	ns
t_{PHL}					24	30	
t_{PLH}	H	$\overline{Q}_H$			19	30	ns
t_{PHL}					17	25	

f_{max} = maximum clock frequency
t_{PLH} = propagation delay time, low-to high-level output
t_{PHL} = propagation delay time, high-to-low-level output

TEXAS INSTRUMENTS
POST OFFICE BOX 655012 • DALLAS, TEXAS 75265

PARAMETER MEASUREMENT INFORMATION

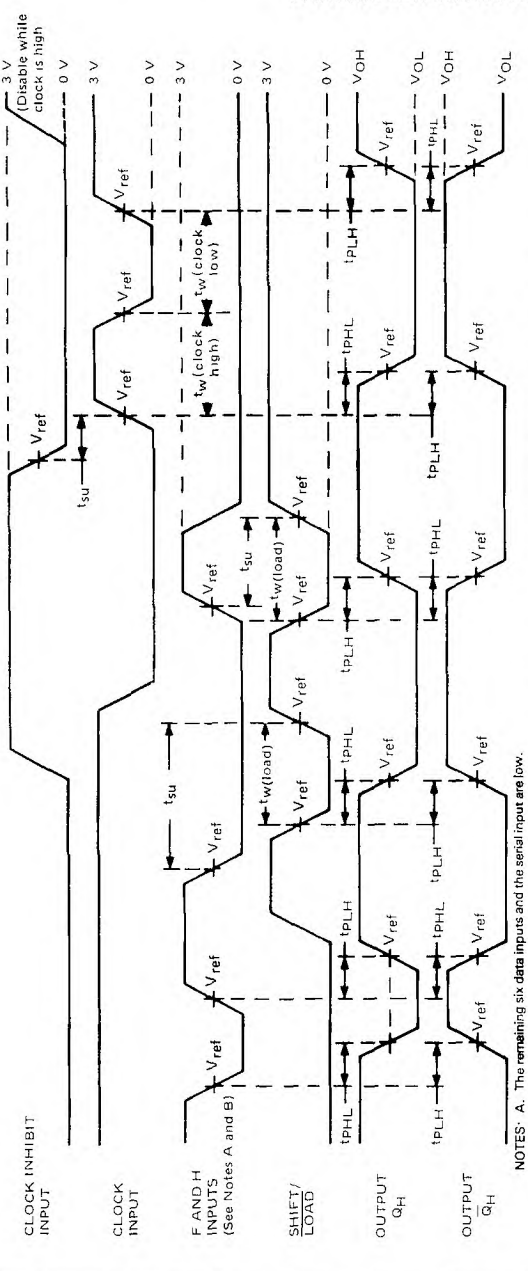

NOTES: A. The remaining six data inputs and the serial input are low.
B. Prior to test, high-level data is loaded into H input.
C. The input pulse generators have the following characteristics: PRR ≤ 1 MHz, duty cycle ≤ 50% $Z_{out} \approx 50\ \Omega$; for '165, $t_r \leq 10$ ns, $t_f \leq 10$ ns; for 'LS165A, $t_r \leq 15$ ns, $t_f \leq 6$ ns
D. For '165, $V_{ref} = 1.5$ V; for 'LS165A, $V_{ref} = 1.3$ V

FIGURE 1–VOLTAGE WAVEFORMS

NOTES: A. The eight data inputs and the clock-inhibit input are low. Results are monitored at output Q_H at $t_n + 7$.
B. The input pulse generators have the following characteristics: PRR ≤ 1 MHz, duty cycle ≤ 50%, $Z_{out} \approx 50\ \Omega$; for '165, $t_r \leq 10$ ns, $t_f \leq 10$ ns; for 'LS165A, $t_r \leq 15$ ns, $t_f \leq 6$ ns
C. For '165, $V_{ref} = 1.5$ V; for 'LS165A, $V_{ref} = 1.3$ V.

FIGURE 2–VOLTAGE WAVEFORMS

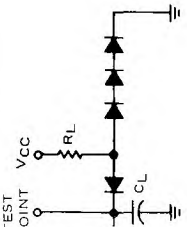

NOTES A. C_L includes probe and jig capacitance.
B. All diodes are 1N3064 or equivalent.

FIGURE 3–LOAD CIRCUIT FOR SWITCHING TESTS

2 TTL Devices

OCTOBER 1976 – REVISED MARCH 1988

- **Synchronous Load**
- **Direct Overriding Clear**
- **Parallel to Serial Conversion**

TYPE	TYPICAL MAXIMUM CLOCK FREQUENCY	TYPICAL POWER DISSIPATION
'166	35 MHz	360 mW
'LS166A	35 MHz	100 mW

description

The '166 and 'LS166A 8-bit shift registers are compatible with most other TTL logic families. All '166 and 'LS166A inputs are buffered to lower the drive requirements to one Series 54/74 or Series 54LS/74LS standard load, respectively. Input clamping diodes minimize switching transients and simplify system design.

These parallel-in or serial-in, serial-out shift registers have a complexity of 77 equivalent gates on a monolithic chip. They feature gated clock inputs and an overriding clear input. The parallel-in or serial-in modes are established by the shift/load input. When high, this input enables the serial data input and couples the eight flip-flops for serial shifting with each clock pulse. When low, the parallel (broadside) data inputs are enabled and synchronous loading occurs on the next clock pulse. During parallel loading, serial data flow is inhibited. Clocking is accomplished on the low-to-high-level edge of the clock pulse through a two-input positive NOR gate permitting one input to be used as a clock-enable or clock-inhibit function. Holding either of the clock inputs high inhibits clocking; holding either low enables the other clock input. This, of course, allows the system clock to be free-running and the register can be stopped on command with the other clock input. The clock inhibit input should be changed to the high level only while the clock input is high. A buffered, direct clear input overrides all other inputs, including the clock, and sets all flip-flops to zero.

FUNCTION TABLE

INPUTS						INTERNAL OUTPUTS		OUTPUT
CLEAR	SHIFT/LOAD	CLOCK INHIBIT	CLOCK	SERIAL	PARALLEL A . . . H	Q_A	Q_B	Q_H
L	X	X	X	X	X	L	L	L
H	X	L	L	X	X	Q_{A0}	Q_{B0}	Q_{H0}
H	L	L	↑	X	a . . . h	a	b	h
H	H	L	↑	H	X	H	Q_{An}	Q_{Gn}
H	H	L	↑	L	X	L	Q_{An}	Q_{Gn}
H	X	H	↑	X	X	Q_{A0}	Q_{B0}	Q_{H0}

SN54166, SN54LS166A . . . J OR W PACKAGE
SN74166 . . . N PACKAGE
SN74LS166A . . . D OR N PACKAGE
(TOP VIEW)

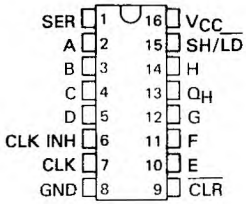

SN54LS166A . . . FK PACKAGE
(TOP VIEW)

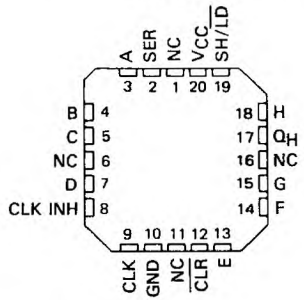

NC – No internal connection

logic symbol†

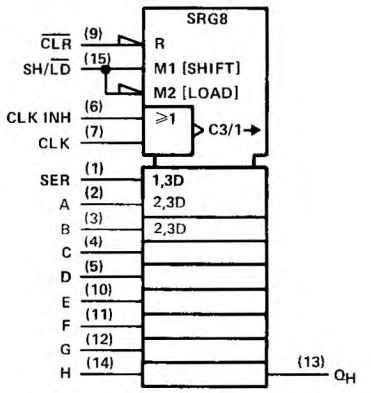

†This symbol is in accordance with ANSI/IEEE Std 91-1984 and IEC Publication 617-12.
Pin numbers shown are for D, J, N, and W packages.

PRODUCTION DATA documents contain information current as of publication date. Products conform to specifications per the terms of Texas Instruments standard warranty. Production processing does not necessarily include testing of all parameters.

typical clear, shift, load, inhibit, and shift sequences

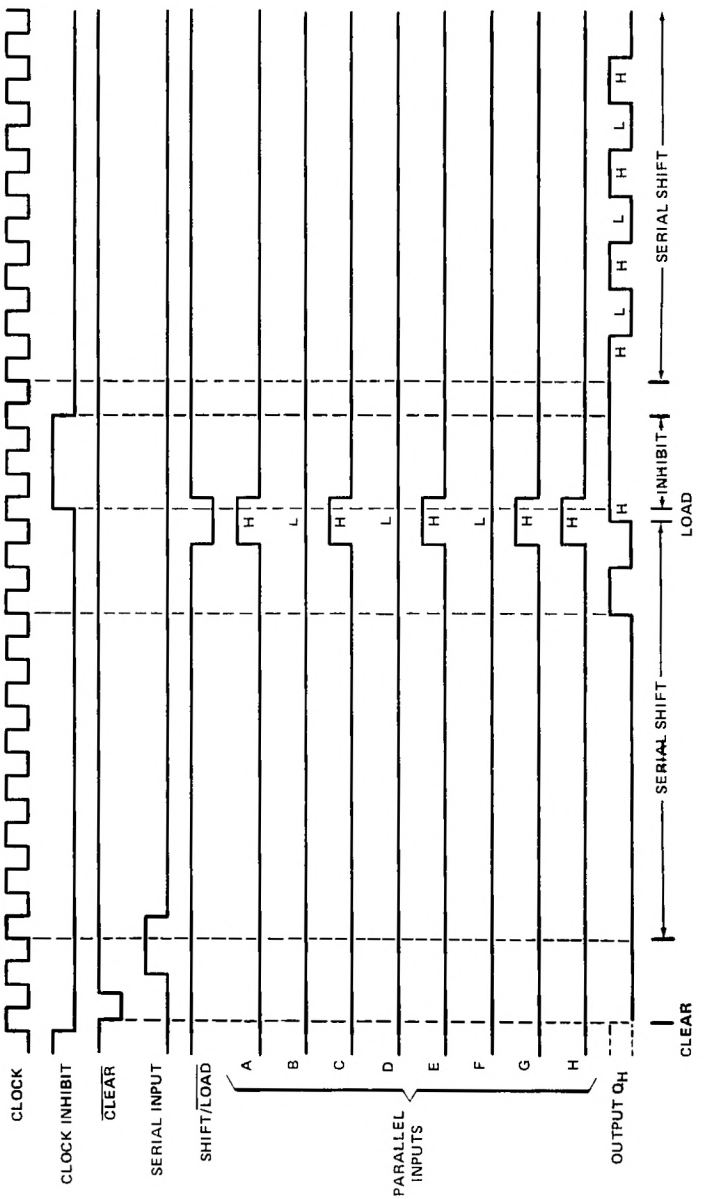

TEXAS INSTRUMENTS
POST OFFICE BOX 655012 • DALLAS, TEXAS 75265

schematics of inputs and outputs

'166

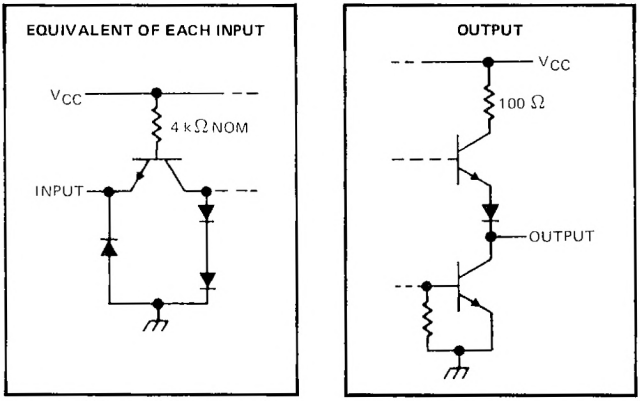

'LS166A

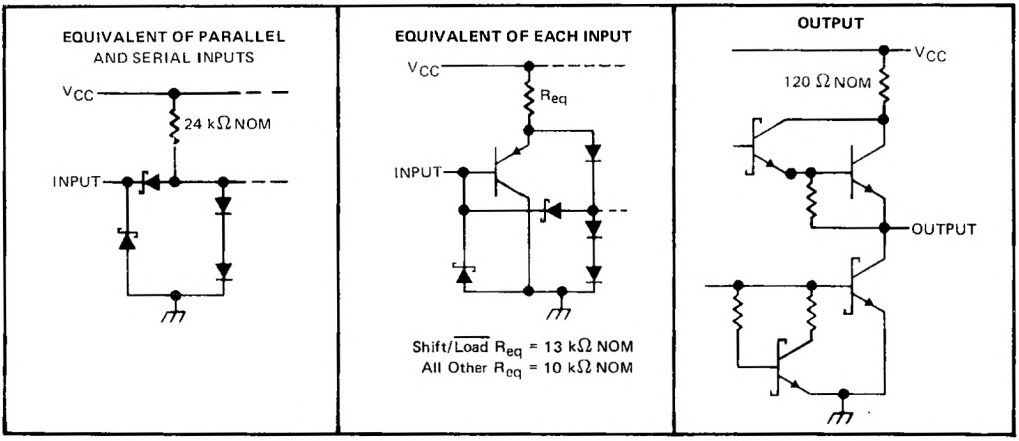

logic diagram (positive logic)

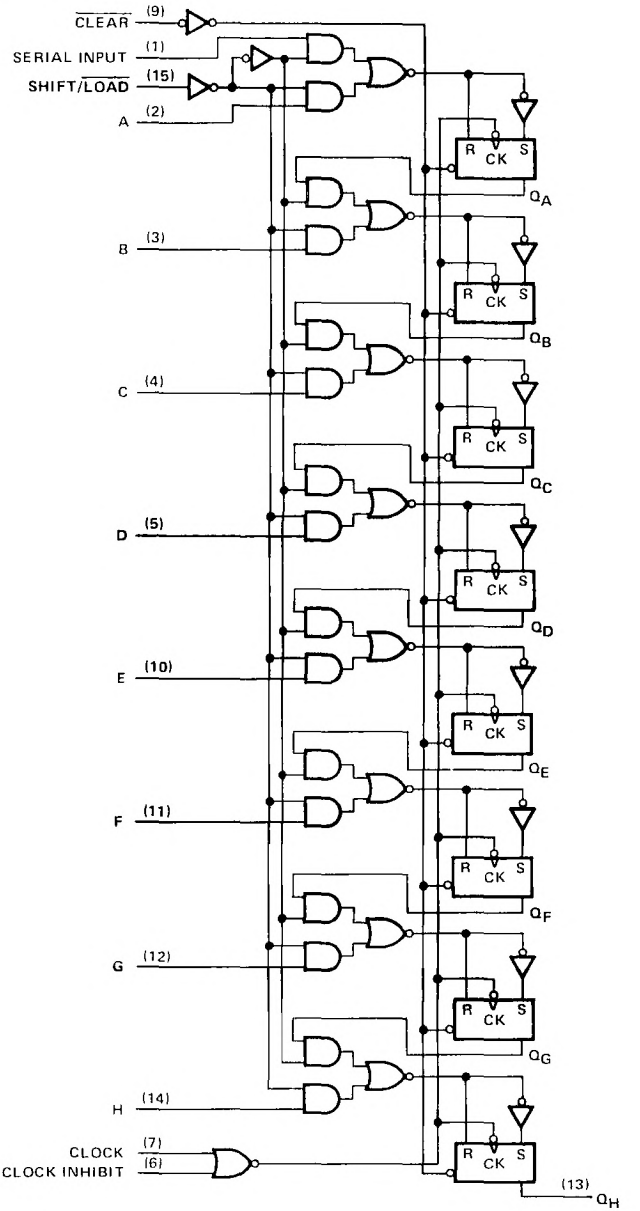

Pin numbers shown are for D, J, N, and W packages.

TEXAS INSTRUMENTS
POST OFFICE BOX 655012 • DALLAS, TEXAS 75265

absolute maximum ratings over operating free-air temperature range (unless otherwise noted)

Supply voltage, V_{CC} (see Note 1) . . . . . 7 V
Input voltage . . . . . 5.5 V
Operating free-air temperature range: SN54166 (see Note 2) . . . . . −55°C to 125°C
SN74166 . . . . . 0°C to 70°C
Storage temperature range . . . . . −65°C to 150°C

recommended operating conditions

	SN54166			SN74166			UNIT
	MIN	NOM	MAX	MIN	NOM	MAX	
Supply voltage, V_{CC}	4.5	5	5.5	4.75	5	5.25	V
High-level output current, I_{OH}			−800			−800	μA
Low-level output current, I_{OL}			16			16	mA
Clock frequency, f_{clock}	0		25	0		25	MHz
Width of clock or clear pulse, t_w (see Figure 1)	20			20			ns
Mode-control setup time, t_{su}	30			30			ns
Data setup time, t_{su} (see Figure 1)	20			20			ns
Hold time at any input, t_h (see Figure 1)	0			0			ns
Operating free-air temperature, T_A (see Note 2)	−55		125	0		70	°C

electrical characteristics over recommended operating free-air temperature range (unless otherwise noted)

PARAMETER		TEST CONDITIONS†	SN54166			SN74166			UNIT
			MIN	TYP‡	MAX	MIN	TYP‡	MAX	
V_{IH}	High-level input voltage		2			2			V
V_{IL}	Low-level input voltage				0.8			0.8	V
V_{IK}	Input clamp voltage	V_{CC} = MIN, I_I = −12 mA			−1.5			−1.5	V
V_{OH}	High-level output voltage	V_{CC} = MIN, V_{IH} = 2 V, V_{IL} = 0.8 V, I_{OH} = −800 μA	2.4	3.4		2.4	3.4		V
V_{OL}	Low-level output voltage	V_{CC} = MIN, V_{IH} = 2 V, V_{IL} = 0.8 V, I_{OL} = 16 mA		0.2	0.4		0.2	0.4	V
I_I	Input current at maximum input voltage	V_{CC} = MAX, V_I = 5.5 V			1			1	mA
I_{IH}	High-level input current	V_{CC} = MAX, V_I = 2.4 V			40			40	μA
I_{IL}	Low-level input current	V_{CC} = MAX, V_I = 0.4 V			−1.6			−1.6	mA
I_{OS}	Short-circuit output current§	V_{CC} = MAX	−20		−57	−18		−57	mA
I_{CC}	Supply current	V_{CC} = MAX, See Note 3		90	127		90	127	mA

† For conditions shown as MIN or MAX, use the appropriate value specified under recommended operating conditions.
‡ All typical values are at V_{CC} = 5 V, T_A = 25°C.
§ Not more than one output should be shorted at a time.

NOTES: 1. Voltage values are with respect to network ground terminal.
2. An SN54166 in the W package operating at free-air temperatures above 113°C requires a heat-sink that provides a thermal resistance from case to free air, $R_{\theta CA}$, of not more than 48°C/W.
3. With all outputs open, 4.5 V applied to the serial input, all other inputs except the clock grounded, I_{CC} is measured after a momentary ground, then 4.5 V, is applied to the clock.

switching characteristics, V_{CC} = 5 V, T_A = 25°C

PARAMETER		TEST CONDITIONS	MIN	TYP	MAX	UNIT
f_{max}	Maximum clock frequency	C_L = 15 pF, R_L = 400 Ω, See Figure 1	25	35		MHz
t_{PHL}	Propagation delay time, high-to-low-level output from clear			23	35	ns
t_{PHL}	Propagation delay time, high-to-low-level output from clock			20	30	ns
t_{PLH}	Propagation delay time, low-to-high-level output from clock			17	26	ns

absolute maximum ratings over operating free-air temperature range (unless otherwise noted)

Supply voltage, V_{CC} (see Note 1) . . . . . 7 V
Input voltage . . . . . 7 V
Operating free-air temperature range: SN54LS166A . . . . . −55°C to 125°C
SN74LS166A . . . . . 0°C to 70°C
Storage temperature range . . . . . −65°C to 150°C

NOTE 1: Voltage values are with respect to network ground terminal.

recommended operating conditions

		SN54LS166A			SN74LS166A			UNIT
		MIN	TYP	MAX	MIN	TYP	MAX	
V_{CC}	Supply voltage	4.5	5	5.5	4.75	5	5.25	V
V_{IH}	High-level input voltage	2			2			V
V_{IL}	Low-level input voltage			0.7			0.8	V
I_{OH}	High-level output current			−0.4			−0.4	mA
I_{OL}	Low-level output current			4			8	mA
f_{clock}	Clock frequency	0		25	0		25	MHz
t_w	Width of clear pulse (See Figure 1)	20			20			ns
t_w	Width of clock pulse (See Figure 1)	25			25			ns
t_{su}	Mode-control setup time	30			30			ns
t_{su}	Data setup time (See Figure 1)	20			20			ns
t_h	Hold time at any input (See Figure 1 and Note 4)	0			0			ns
T_A	Operating free-air temperature	−55		125	0		70	°C

NOTE 4: The hold time limit of 0 ns applies only if the rise time is less than or equal to 10 ns.

electrical characteristics over recommended operating free-air temperature range (unless otherwise noted)

PARAMETER	TEST CONDITIONS†		SN54LS166A			SN74LS166A			UNIT
			MIN	TYP‡	MAX	MIN	TYP‡	MAX	
V_{IK}	V_{CC} = MIN, I_I = −18 mA				−1.5			−1.5	V
V_{OH}	V_{CC} = MIN, V_{IH} = 2 V, V_{IL} = MAX, I_{OH} = −0.4 mA		2.5	3.4		2.7	3.4		V
V_{OL}	V_{CC} = MIN, V_{IH} = 2 V, V_{IL} = MAX	I_{OL} = 4 mA		0.25	0.4		0.25	0.4	V
		I_{OL} = 8 mA					0.35	0.5	
I_I	V_{CC} = MAX, V_I = 7 V				0.1			0.1	mA
I_{IH}	V_{CC} = MAX, V_I = 2.7 V				20			20	μA
I_{IL}	V_{CC} = MAX, V_I = 0.4 V				−0.4			−0.4	mA
I_{OS}§	V_{CC} = MAX		−20		−100	−20		−100	mA
I_{CC}	V_{CC} = MAX, See Note 5			20	32		20	32	mA

†For conditions shown as MIN or MAX, use the appropriate value specified under recommended operating conditions.
‡All typical values are at V_{CC} = 5 V, T_A = 25°C
§Not more than one output should be shorted at a time, and duration for short-circuit should not exceed one second.
NOTE 5: With all outputs open, 4.5 V applied to the serial input and all other inputs except the clock grounded, I_{CC} is measured after a momentary ground, than 4.5 V, is applied to clock.

switching characteristics, V_{CC} = 5 V, T_A = 25°C

PARAMETER		TEST CONDITIONS	MIN	TYP	MAX	UNIT
f_{max}	Maximum clock frequency	C_L = 15 pF, R_L = 2 kΩ, See Figure 1	25	35		MHz
t_{PHL}	Propagation delay time, high-to-low-level output from clear			19	30	ns
t_{PHL}	Propagation delay time, high-to-low-level output from clock		7	14	25	ns
t_{PLH}	Propagation delay time, low-to-high-level output from clock		5	11	20	ns

TEXAS INSTRUMENTS
POST OFFICE BOX 655012 • DALLAS, TEXAS 75265

PARAMETER MEASUREMENT INFORMATION

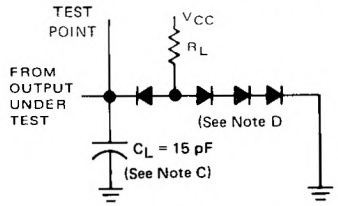

LOAD FOR OUTPUT UNDER TEST

TEST TABLE FOR SYNCHRONOUS INPUTS

DATA INPUT FOR TEST	SHIFT/$\overline{\text{LOAD}}$	OUTPUT TESTED (SEE NOTE F)
H	0 V	Q_H at t_{n+1}
Serial Input	4.5 V	Q_H at t_{n+8}

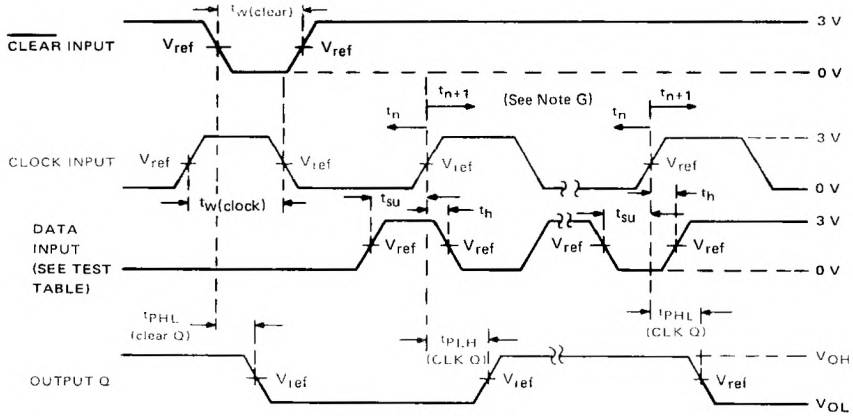

VOLTAGE WAVEFORMS

NOTE: A. All pulse generators have the following characteristics: $Z_{out} \approx 50\Omega$; for '166, $t_r \leq 7$ ns and $t_f \leq 7$ ns; for 'LS166A, $t_r \leq 15$ ns and $t_f \leq 6$ ns.

B. The clock pulse has the following characteristics: $t_{w(clock)} \leq 20$ ns and PRR = 1 MHz. The clear pulse has the following characteristics: $t_{w(clear)} \leq 20$ ns and $t_{hold} = 0$ ns. When testing f_{max}, vary the clock PRR.

C. C_L includes probe and jig capacitance.

D. All diodes are 1N3064, 1N916, or equivalent.

E. A clear pulse is applied prior to each test.

F. Propagation delay times (t_{PLH} and t_{PHL}) are measured at t_{n+1}. Proper shifting of data is verified at t_{n+8} with a functional test.

G. t_n = bit time before clocking transition
t_{n+1} = bit time after one clocking transition
t_{n+8} = bit time after eight clocking transitions

H. For '166 V_{ref} = 1.5 V; for 'LS166A V_{ref} = 1.3 V.

FIGURE 1

DECEMBER 1972 – REVISED MARCH 1988

- **Perform Fixed-Rate or Variable-Rate Frequency Division**
- **For Applications in Arithmetic, Radar, Digital-to-Analog (D/A), Analog-to-Digital (A/D), and other Conversion Operations**
- **Typical Maximum Clock Frequency . . . 32 MHz**

SN54167 . . . J OR W PACKAGE
SN74167 . . . N PACKAGE
(TOP VIEW)

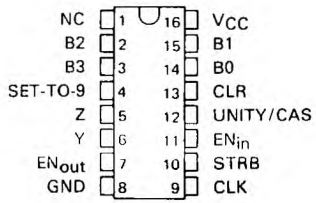

NC – No internal connection

description

These monolithic, fully synchronous, programmable counters utilize Series 54/74 TTL circuitry to achieve 32-megahertz typical maximum operating frequencies. These decade counters feature buffered clock, clear, enable and set-to-nine inputs to control the operation of the counter, and a strobe input to enable or inhibit the rate input/decoding AND-OR-INVERT gates. The outputs have additional gating for cascading and transferring unity-count rates.

The counter is enabled when the clear, strobe set-to-nine, and enable inputs are low. With the counter enabled, the output frequency is equal to the input frequency multiplied by the rate input M and divided by 10, Ie.:

$$f_{out} = \frac{M \cdot f_{in}}{10}$$

where: $M = B3 \cdot 2^3 + B2 \cdot 2^2 + B1 \cdot 2^1 + B0 \cdot 2^0$
for decimal zero through nine.

logic symbol†

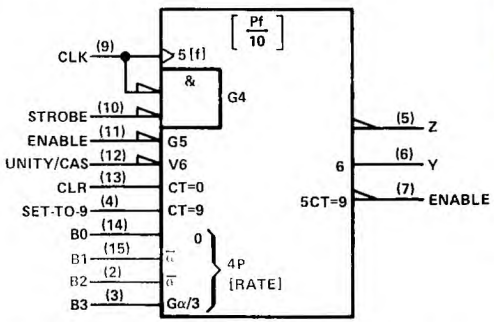

†This symbol is in accordance with ANSI/IEEE Std. 91-1984 and IEC Publication 617-12.

When the rate input is binary 0 (all rate inputs low), Z remains high. In order to cascade devices to perform two-decade rate multiplication (0-99), the enable output is connected to the enable and strobe inputs of the next stage, the Z output of each stage is connected to the unity/cascade input of the other stage, and the sub-multiple frequency is taken from the Y output. For longer words, see typical application data, Figure 1.

The unity/cascade input, when connected to the clock input, may be utilized to pass the clock frequency (inverted) to the Y output when the rate input/decoding gates are inhibited by the strobe. The unity/cascade input may also be used as a control for the Y output.

All of the Inputs of these counters are diode-clamped, and each input, except the clock input, represents one normalized Series 54/74 load. The buffered clock input, used with the strobe gate, is only two Series 54/74 loads. Full fan-out to 10 Series 54/74 loads is available from each of the output. These devices are completely compatible with most TTL and DTL families. Typical dissipation is 270 milliwatts. The SN54167 is characterized for operation over the full military temperature range of −55°C to 125°C, and the SN74167 is characterized for operation from 0°C to 70°C.

PRODUCTION DATA documents contain information current as of publication date. Products conform to specifications per the terms of Texas Instruments standard warranty. Production processing does not necessarily include testing of all parameters.

STATE AND/OR RATE FUNCTION TABLE (See Note A)

INPUTS									OUTPUTS			
			BCD RATE				NUMBER OF	UNITY/	LOGIC LEVEL OR NUMBER OF PULSES			
CLEAR	ENABLE	STROBE	B3	B2	B1	B0	CLOCK PULSES	CASCADE	Y	Z	ENABLE	NOTES
H	X	H	X	X	X	X	X	H	L	H	H	B
L	L	L	L	L	L	L	10	H	L	H	1	C
L	L	L	L	L	L	H	10	H	1	1	1	C
L	L	L	L	L	H	L	10	H	2	2	1	C
L	L	L	L	L	H	H	10	H	3	3	1	C
L	L	L	L	H	L	L	10	H	4	4	1	C
L	L	L	L	H	L	H	10	H	5	5	1	C
L	L	L	L	H	H	L	10	H	6	6	1	C
L	L	L	L	H	H	H	10	H	7	7	1	C
L	L	L	H	L	L	L	10	H	8	8	1	C
L	L	L	H	L	L	H	10	H	9	9	1	C
L	L	L	H	L	H	L	10	H	8	8	1	C, D
L	L	L	H	L	H	H	10	H	9	9	1	C, D
L	L	L	H	H	L	L	10	H	8	8	1	C, D
L	L	L	H	H	L	H	10	H	9	9	1	C, D
L	L	L	H	H	H	L	10	H	8	8	1	C, D
L	L	L	H	H	H	H	10	H	9	9	1	C, D
L	L	L	H	L	L	H	10	L	H	9	1	E

NOTES:
A. H = high level, L = low level, X = irrelevant. All remaining entries are numeric counts.
B. This is a simplified illustration of the clear function. The states of clock and strobe can affect the logic level of Y and Z. A low unity/cascade will cause output Y to remain high.
C. Each rate illustrated assumes a constant value at rate inputs; however, these illustrations in no way prohibit variable-rate inputs.
D. These input conditions exceed the range of the decimal rate inputs.
E. Unity/cascade can be used to inhibit output Y.

schematics of inputs and outputs

EQUIVALENT OF EACH INPUT

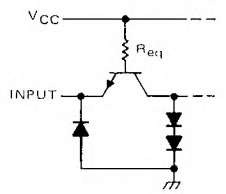

Clock R_{eq} = 2 kΩ NOM
All others R_{eq} = 4 kΩ NOM

TYPICAL OF ALL OUTPUTS

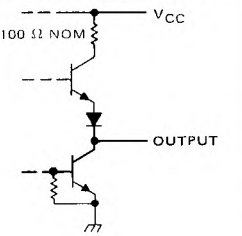

TEXAS INSTRUMENTS
POST OFFICE BOX 655012 • DALLAS, TEXAS 75265

logic diagram (positive logic)

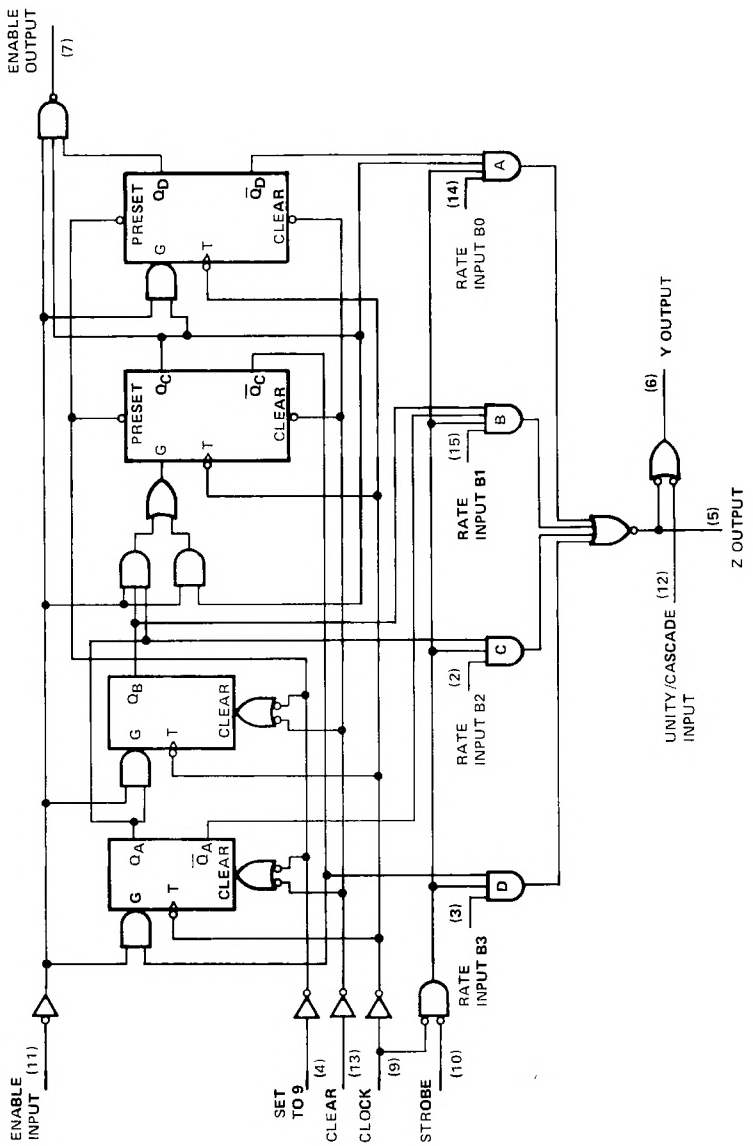

absolute maximum ratings over operating free-air temperature range (unless otherwise noted)

Supply voltage, V_{CC} (see Note 1) . . . . . 7 V
Input voltage . . . . . 5.5 V
Operating free-air temperature range: SN54167 . . . . . −55°C to 125°C
SN74167 . . . . . 0°C to 70°C
Storage temperature range . . . . . −65°C to 150°C

NOTE 1: Voltage values are with respect to network ground terminal.

recommended operating conditions

	SN54167			SN74167			UNIT
	MIN	NOM	MAX	MIN	NOM	MAX	
Supply voltage, V_{CC}	4.5	5	5.5	4.75	5	5.25	V
High-level output current, I_{OH}			−0.4			−0.4	mA
Low-level output current, I_{OL}			16			16	mA
Clock frequency, f_{clock}	0		25	0		25	MHz
Width of clock pulse, $t_{w(clock)}$	20			20			ns
Width of clear pulse, $t_{w(clear)}$	15			15			ns
Width of set-to-nine pulse $t_{w(set\text{-}to\text{-}9)}$	15			15			ns
Enable setup time, t_{su}: (See Note 2)							
From positive-going transition of clock pulse	25			25			ns
From negative-going transition of previous clock pulse	0		$t_{w(clock)}-10$	0		$t_{w(clock)}-10$	ns
Enable hold time, t_h: (See Note 2)							
From positive-going transition of clock pulse	0		$t_{w(clock)}-10$	0		$t_{w(clock)}-10$	ns
From negative-going transition of previous clock pulse	20		$t_{cp}-10$	20		$t_{cp}-10$	ns
Operating free-air temperature, T_A	−55		125	0		70	°C

NOTE 2: $t_{w(clock)}$ is the interval in which the clock is high. t_{cp} is the total clock cycle starting with a negative transition. See Figure 1 on SN5497, SN7497 data sheet.

electrical characteristics over recommended operating free-air temperature range (unless otherwise noted)

PARAMETER			TEST CONDITIONS†		MIN	TYP‡	MAX	UNIT
V_{IH}	High-level input voltage				2			V
V_{IL}	Low-level input voltage						0.8	V
V_I	Input clamp voltage		V_{CC} = MIN,	I_I = −12 mA			−1.5	V
V_{OH}	High-level output voltage		V_{CC} = MIN, V_{IL} = 0.8 V,	V_{IH} = 2 V, I_{OH} = −400 μA	2.4	3.4		V
V_{OL}	Low-level output voltage		V_{CC} = MIN, V_{IL} = 0.8 V,	V_{IH} = 2 V, I_{OL} = 16 mA		0.2	0.4	V
I_I	Input current at maximum input voltage		V_{CC} = MAX,	V_I = 5.5 V			1	mA
I_{IH}	High-level input current	clock input	V_{CC} = MAX,	V_I = 2.4 V			80	μA
		other inputs					40	
I_{IL}	Low-level input current	clock inputs	V_{CC} = MAX,	V_I = 0.4 V			−3.2	mA
		other inputs					−1.6	
I_{OS}	Short circuit output current§		V_{CC} = MAX		−18		−55	mA
I_{CCH}	Supply current, output high		V_{CC} = MAX,	See Note 3		43		mA
I_{CCL}	Supply current, output low		V_{CC} = MAX,	See Note 4		65	99	mA

NOTES: 3. I_{CCH} is measured with outputs open and all inputs low.
4. I_{CCL} is measured with outputs open and all inputs high except the set-to-nine input which is low.

†For test conditions shown as MIN or MAX, use the appropriate value specified under recommended operating conditions for the applicable device type.

‡All typical values are at V_{CC} = 5 V, T_A = 25°C.

§Not more than one output should be shorted at a time.

TEXAS INSTRUMENTS
POST OFFICE BOX 655012 • DALLAS, TEXAS 75265

switching characteristics, V_{CC} = 5 V, T_A = 25°C

PARAMETERS†	FROM INPUT	TO OUTPUT	TEST CONDITIONS	MIN	TYP	MAX	UNIT
f_{max}			C_L = 15 pF, R_L = 400 Ω, See Note 5	25	32		MHz
t_{PLH}	Enable	Enable			13	20	ns
t_{PHL}					14	21	
t_{PLH}	Strobe	Z			12	18	ns
t_{PHL}					15	23	
t_{PLH}	Clock	Y			26	39	ns
t_{PHL}					20	30	
t_{PLH}	Clock	Z			12	18	ns
t_{PHL}					17	26	
t_{PLH}	Rate	Z			9	14	ns
t_{PHL}					6	10	
t_{PLH}	Unity/Cascade	Y			9	14	ns
t_{PHL}					6	10	
t_{PLH}	Strobe	Y			19	30	ns
t_{PHL}					22	33	
t_{PLH}	Clock	Enable			19	30	ns
t_{PHL}					22	33	
t_{PLH}	Clear	$\overline{Y}$			24	36	ns
t_{PHL}		$\overline{Z}$			15	23	
t_{PHL}	Set-to-9	Enable			18	27	ns
t_{PLH}	Any Rate Input	Y			15	23	ns
t_{PHL}					15	23	

†f_{max} is maximum clock frequency.
t_{PLH} is propagation delay time, low-to-high-level output.
t_{PHL} is propagation delay time, high-to-low-level output

NOTE 5: Load circuit, voltage waveforms, and input conditions for measuring switching characteristics are the same as those for the SN5497 and SN7497.

TYPICAL APPLICATION DATA

This application demonstrates how the decimal-rate multipliers may be cascaded for longer words. Three decades are illustrated (0.999 to 999) although longer words can be implemented by using the pattern shown. The output is decoded either from output Y with a NOR gate or from output Z with a NAND gate. Either method of decoding produces the complement of the output used.

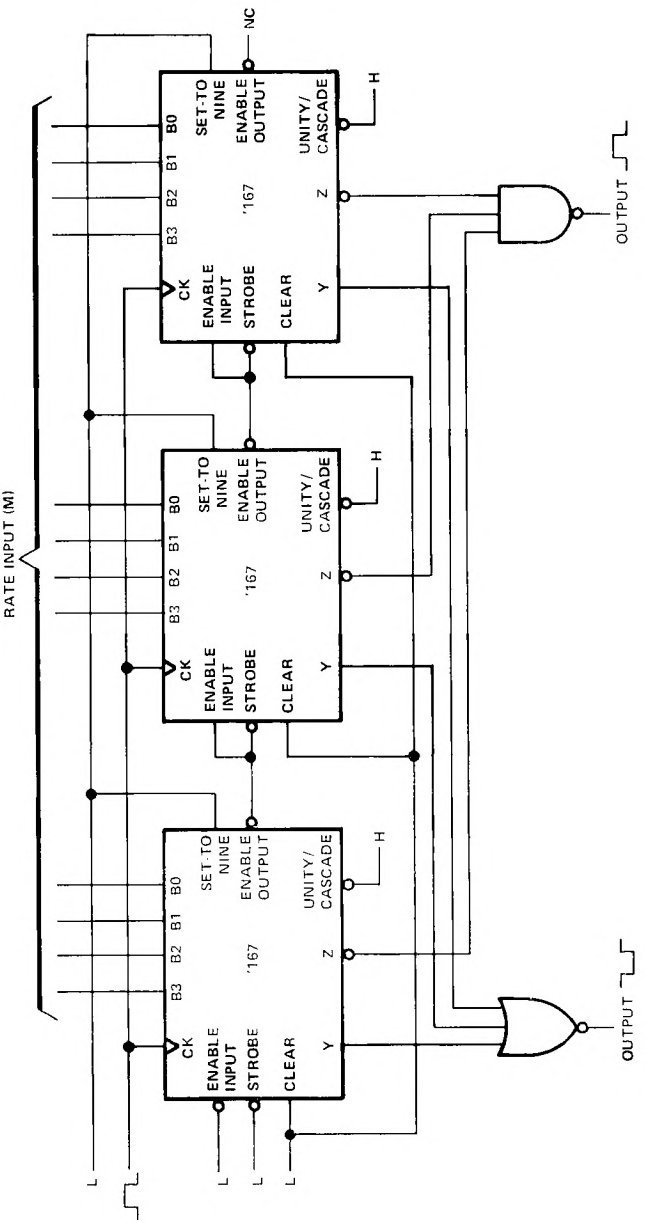

TEXAS INSTRUMENTS
POST OFFICE BOX 655012 • DALLAS, TEXAS 75265

- Programmable Look-Ahead Up/Down Binary Counters
- Fully Synchronous Operation for Counting and Programming
- Internal Look-Ahead for Fast Counting
- Carry Output for n-Bit Cascading
- Fully Independent Clock Circuit

SN54LS169B, SN54S169 . . . J OR W PACKAGE
SN74LS169B, SN74S169 . . . D OR N PACKAGE
(TOP VIEW)

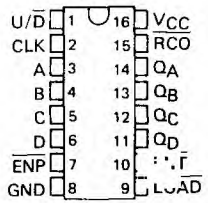

SN54LS169B, SN54S169 . . . FK PACKAGE
(TOP VIEW)

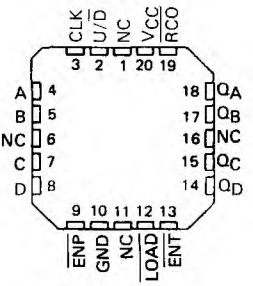

NC-No internal connection

description

These synchronous presettable counters feature an internal carry look-ahead for cascading in high speed counting applications. The 'LS169B and 'S169 are 4-bit binary counters. Synchronous operation is provided by having all flip-flops clocked simultaneously so that the outputs change coincident with each other when so instructed by the count-enable inputs and internal gating. This mode of operation helps eliminate the output counting spikes that are normally associated with asynchronous (ripple-clock) counters. A buffered clock input triggers the four master-slave flip-flops on the rising (positive-going) edge of the clock waveform.

These counters are fully programmable; that is the outputs may each be preset to either level. The load input circuitry allows loading with the carry-enable output of cascaded counters. As loading is synchronous, setting up a low level at the load input disables the counter and causes the outputs to agree with the data inputs after the next clock pulse.

TYPE	TYPICAL MAXIMUM CLOCK FREQUENCY		TYPICAL POWER DISSIPATION
	COUNTING UP	COUNTING DOWN	
'LS169B	35MHz	35MHz	100mW
'S169	70MHz	55MHz	500mW

The carry look-ahead circuitry provides for cascading counters for n-bit synchronous applications without additional gating. Instrumental in accomplishing this function are two count-enable inputs and a carry output. Both count enable inputs ($\overline{ENP}$, $\overline{ENT}$) must be low to count. The direction of the count is determined by the level of the up/down input. When the input is high, the counter counts up; when low, it counts down. Input $\overline{ENT}$ is fed forward to enable the carry output. The carry output thus enabled will produce a low-level output pulse with a duration approximately equal to the high portion of the Q_A output when counting up and approximately equal to the low portion of the Q_A output when counting down. This low-level overflow carry pulse can be used to enable successive cascaded stages. Transitions at the $\overline{ENP}$ or $\overline{ENT}$ inputs are allowed regardless of the level of the clock input. All inputs are diode-clamped to minimize transmission-line effects, thereby simplifying system design.

These counters feature a fully independent clock circuit. Changes at control inputs ($\overline{ENP}$, $\overline{ENT}$, $\overline{LOAD}$, U/$\overline{D}$) that will modify the operating mode have no effect until clocking occurs. The function of the counter (whether enabled, disabled, loading, or counting) will be dictated solely by the conditions meeting the stable setup and hold times.

PRODUCTION DATA documents contain information current as of publication date. Products conform to specifications per the terms of Texas Instruments standard warranty. Production processing does not necessarily include testing of all parameters.

logic symbol†

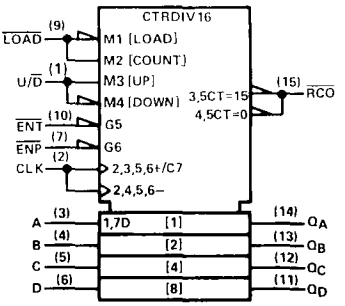

†This symbol is in accordance with ANSI/IEEE Std 91-1984 and IEC Publication 617-12.
Pin numbers shown are for D, J, N, and W packages.

TEXAS INSTRUMENTS
POST OFFICE BOX 655012 • DALLAS, TEXAS 75265

logic diagram (positive logic)

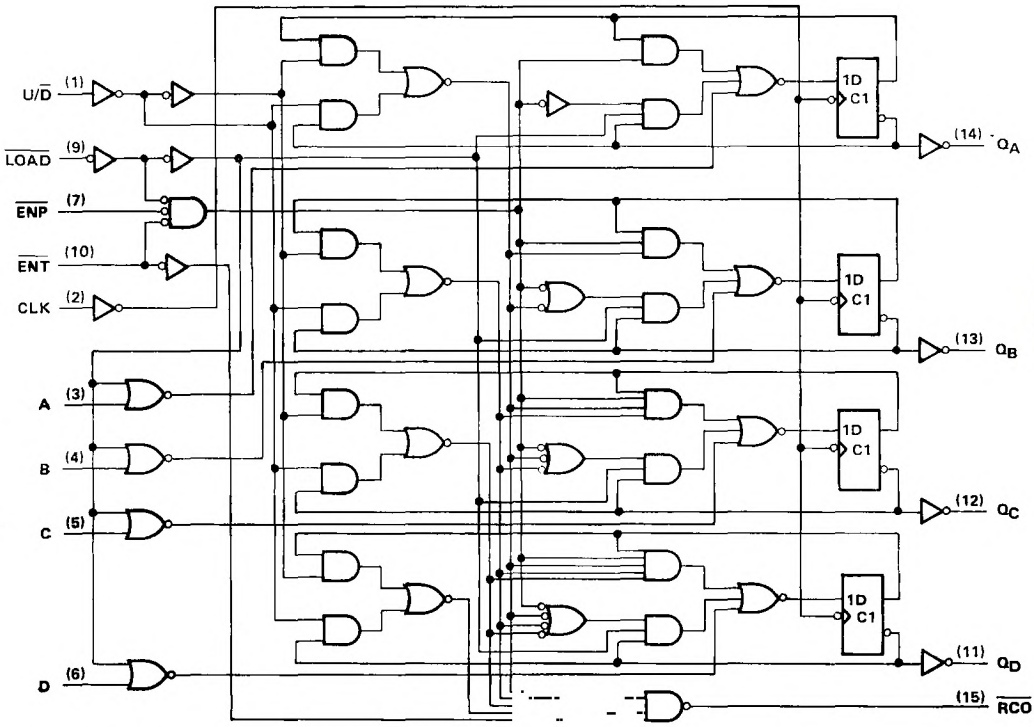

Pin numbers shown are for D, J, N, and W packages.

logic diagram (positive logic)

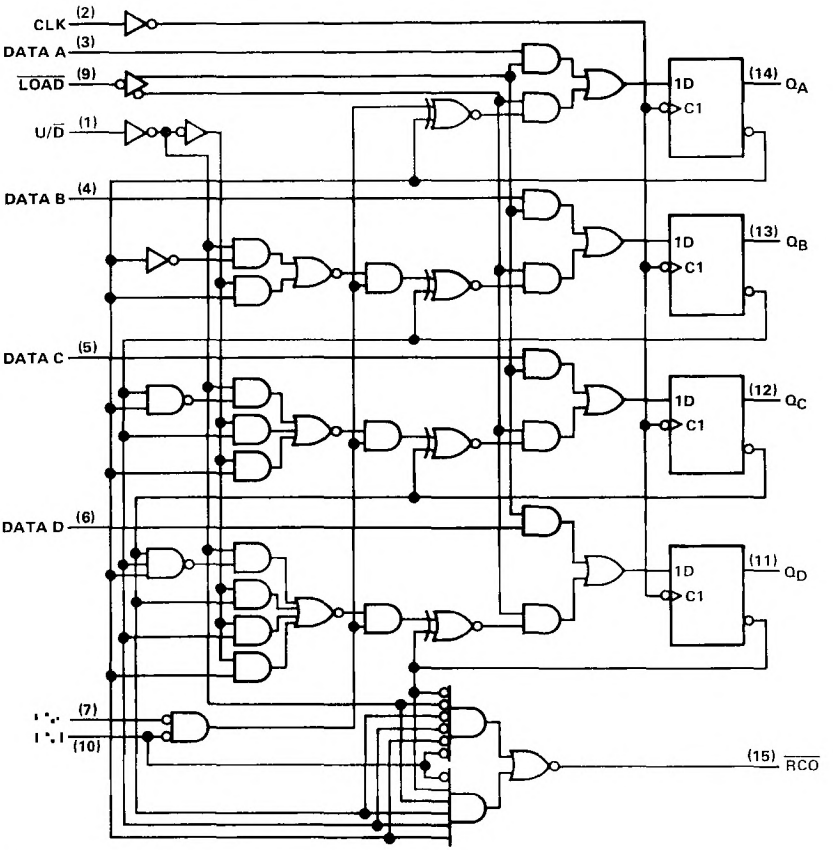

Pin numbers shown are for D, J, N, and W packages.

TEXAS INSTRUMENTS
POST OFFICE BOX 655012 • DALLAS, TEXAS 75265

typical load, count, and inhibit sequences

Illustrated below is the following sequence:

1. Load (preset) to binary thirteen
2. Count up to fourteen, fifteen (maximum), zero, one, and two
3. Inhibit
4. Count down to one, zero (minimum), fifteen, fourteen, and thirteen

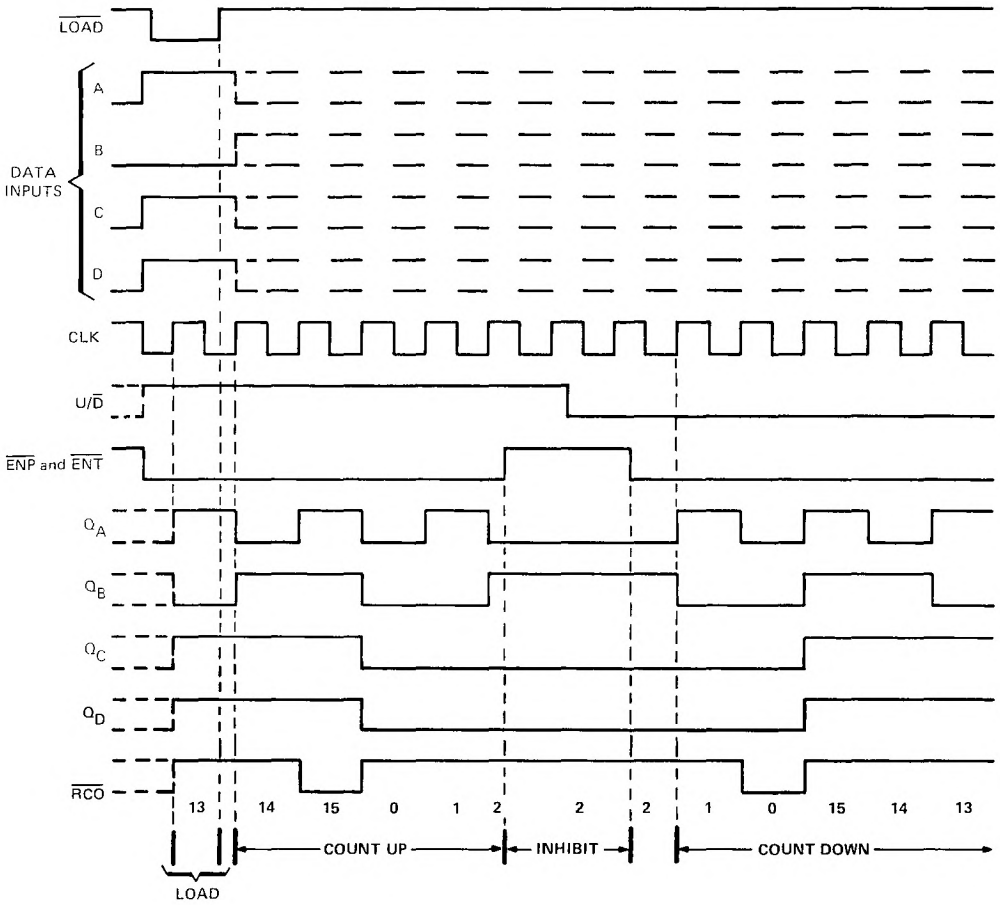

schematics of inputs and outputs

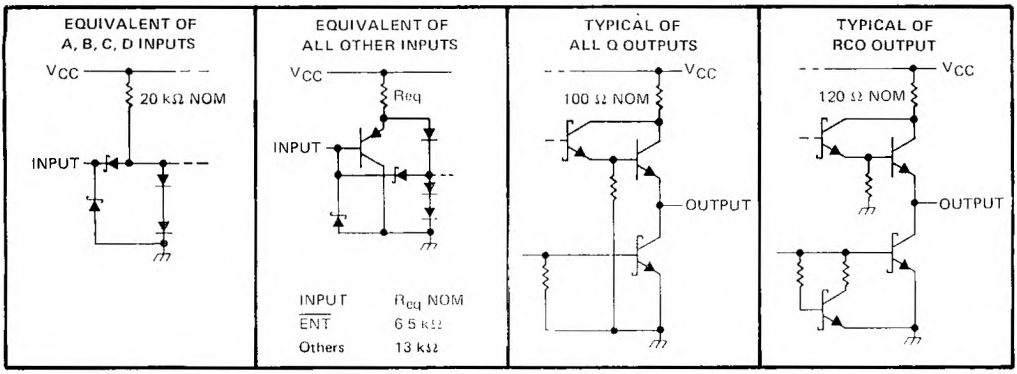

absolute maximum ratings over operating free-air temperature range (unless otherwise noted)

Supply voltage, V_{CC} (see Note 1) . . . . . 7 V
Input voltage . . . . . 7 V
Operating free-air temperature range: SN54LS169B . . . . . −55°C to 125°C
SN74LS169B . . . . . 0°C to 70°C
Storage temperature range . . . . . −65°C to 150°C

NOTE 1: Voltage values are with respect to network ground terminal.

recommended operating conditions

			SN54LS169B			SN74LS169B			UNIT
			MIN	NOM	MAX	MIN	NOM	MAX	
V_{CC}	Supply voltage		4.5	5	5.5	4.75	5	5.25	V
V_{IH}	High-level input voltage		2			2			V
V_{IL}	Low-level input voltage				0.7			0.8	V
I_{OH}	High-level output current				−0.4			−0.4	mA
					−1.2			−1.2	mA
I_{OL}	Low-level output current				4			8	mA
		Any Q			12			24	mA
f_{clock}	Clock frequency		0		20	0		20	MHz
$t_{w(clock)}$	Width of clock pulse (high or low) (see Figure 1)		25			25			ns
t_{su}	Setup time, (see Figure 1)	Data inputs A, B, C, D	30			30			ns
		ENT	30			30			
		LOAD	35			35			
		U/D	35			35			
t_h	Hold time at any input with respect to clock (see Figure 1)		0			0			ns
T_A	Operating free-air temperature		−55		125	0		70	°C

TEXAS INSTRUMENTS
POST OFFICE BOX 655012 • DALLAS, TEXAS 75265

electrical characteristics over recommended operating free-air temperature range (unless otherwise noted)

PARAMETER	TEST CONDITIONS†			SN54LS169B MIN	SN54LS169B TYP‡	SN54LS169B MAX	SN74LS169B MIN	SN74LS169B TYP‡	SN74LS169B MAX	UNIT
V_{IK}	V_{CC} = MIN, I_I = −18 mA					−1.5			−1.5	V
V_{OH}	V_{CC} = MIN, V_{IH} = 2 V, V_{IL} = MAX	$\overline{RCO}$	I_{OH} = −0.4 mA	2.5	3.4		2.7	3.4		V
		Any Q	I_{OH} = −1.2 mA	2.4	3.2		2.4	3.2		
V_{OL}	V_{CC} = MIN, V_{IH} = 2 V, V_{IL} = MAX	$\overline{RCO}$	I_{OH} = 4 mA		0.25	0.4		0.25	0.4	V
			I_{OL} = 8 mA					0.35	0.5	
		Any Q	I_{OL} = 12 mA		0.25	0.4		0.25	0.4	
			I_{OL} = 24 mA					0.35	0.5	
I_I	V_{CC} = MAX, V_I = 7 V					0.1			0.1	mA
I_{IH}	V_{CC} = MAX, V_I = 2.7 V					20			20	μA
I_{IL}	V_{CC} = MAX, V_I = 0.4 V	U/$\overline{D}$, $\overline{L}$ $\overline{ENP}$, CLK				−0.2			−0.2	mA
		All other inputs				−0.4			−0.4	
I_{OS}§	V_{CC} = MAX, V_O = 0 V	$\overline{RCO}$		−20		−100	−20		−100	mA
		Any Q		−30		−130	−30		−130	
I_{CC}	V_{CC} = MAX, See Note 2				28	45		28	45	mA

† For conditions shown as MIN or MAX, use the appropriate value specified under recommended operating conditions.
‡ All typical values are at V_{CC} = 5 V, T_A = 25°C.
§ Not more than one output should be shorted at a time, and duration of the short-circuit should not exceed one second.
NOTE 2: I_{CC} is measured after applying a momentary 4.5 V, then ground, to the clock input with all other inputs grounded and the outputs open.

switching characteristics, V_{CC} = 5 V, T_A = 25°C (see note 3)

PARAMETER¶	FROM (INPUT)	TO (OUTPUT)	TEST CONDITIONS	'LS169B MIN	'LS169B TYP	'LS169B MAX	UNIT
f_{max}				20	35		MHz
t_{PLH}	CLK	$\overline{RCO}$	R_L = 2 kΩ, C_L = 15 pF		26	40	ns
t_{PHL}					17	25	
t_{PLH}	$\overline{ENT}$	$\overline{RCO}$			15	25	ns
t_{PHL}					11	20	
t_{PLH}	U/$\overline{D}$	$\overline{RCO}$			23	35	ns
t_{PHL}					15	25	
t_{PLH}	CLK	Any Q	R_L = 667 Ω, C_L = 45 pF		16	25	ns
t_{PHL}					17	25	

¶ Propagation delay time from up/down to ripple carry must be measured with the counter at either a minimum or a maximum count. As the logic level of the up/down input is changed, the ripple carry output will follow. If the count is minimum (0), the ripple carry output transistion will be in phase. If the count is maximum (15), the ripple carry output will be out of phase.
NOTE 3: Load circuits and voltage waveforms are shown in Section 1.

schematics of inputs and outputs

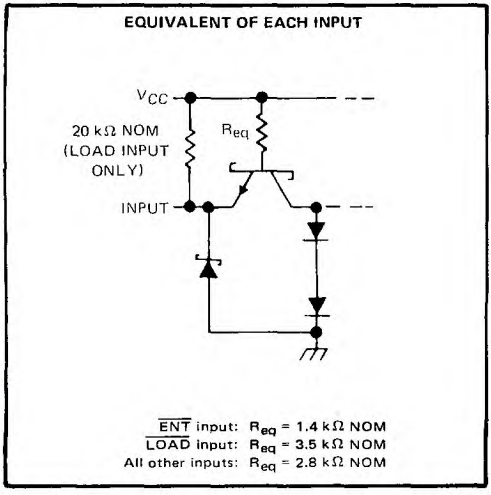

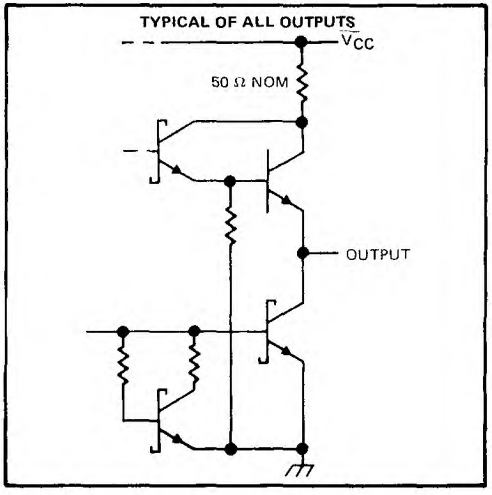

absolute maximum ratings over operating free-air temperature range (unless otherwise noted)

Supply voltage, V_{CC} (See Note 4) . . . . . 7 V
Input voltage . . . . . 5.5 V
Interemitter voltage (see Note 5) . . . . . 5.5 V
Operating free-air temperature range: SN54S169 (see Note 6) . . . . . −55°C to 125°C
SN74S169 . . . . . 0°C to 70°C
Storage temperature range . . . . . −65°C to 150°C

recommended operating conditions

		SN54S169			SN74S169			UNIT
		MIN	NOM	MAX	MIN	NOM	MAX	
Supply voltage, V_{CC}		4.5	5	5.5	4.75	5	5.25	V
High-level output current, I_{OH}				−1			−1	mA
Low-level output current, I_{OL}				20			20	mA
Clock frequency, f_{clock}		0		40	0		40	MHz
Width of clock pulse, $t_{w(clock)}$ (high or low) (see Figure 1)		10			10			ns
Setup time, t_{su} (see Figure 1)	[illegible] A, B, C, D	4			4			ns
	[illegible]	14			14			
	Load	9			6			
	U/D	20			20			
Hold time at any input with respect to clock, t_w (see Figure 1)		1			1			ns
Operating free-air temperature, T_A (see Note 6)		−55		125	0		70	°C

NOTES: 4. Voltage values, except interemitter voltage, are with respect to network ground terminal.
5. This is the voltage between two emitters of a multiple-emitter transistor. For these circuits, this rating applies between the count enable inputs CTEP and ENT.
6. A SN54S169 in the W package operating at free-air temperatures above 91°C requires a heat sink that provides a thermal resistance from case to free-air, $R_{\theta CA}$, of not more than 26°C/W.

TEXAS INSTRUMENTS
POST OFFICE BOX 655012 • DALLAS, TEXAS 75265

electrical characteristics over recommended operating free-air temperature range (unless otherwise noted)

PARAMETER		TEST CONDITIONS†	SN54S169			SN74S169			UNIT
			MIN	TYP‡	MAX	MIN	TYP‡	MAX	
V_{IH}	High-level input voltage		2			2			V
V_{IL}	Low-level input voltage				0.8			0.8	V
V_{IK}	Input clamp voltage	V_{CC} = MIN, I_I = −18 mA			−1.2			−1.2	V
V_{OH}	High-level output voltage	V_{CC} = MIN, V_{IH} = 2 V, V_{IL} = 0.8 V, I_{OH} = −1 mA	2.5	3.4		2.7	3.4		V
V_{OL}	Low-level output voltage	V_{CC} = MIN, V_{IH} = 2 V, V_{IL} = 0.8 V, I_{OL} = 20 mA			0.5			0.5	V
I_I	Input current at maximum input voltage	V_{CC} = MAX, V_I = 5.5 V			1			1	mA
I_{IH}	High-level input current	V_{CC} = MAX, V_I = 2.7 V						100	μA
			−10			−10		−200	
					50			50	
I_{IL}	Low-level input current	V_{CC} = MAX, V_I = 0.5 V			−4			−4	mA
					−2			−2	
I_{OS}	Short-circuit output current§	V_{CC} = MAX,	−40		−100	−40		−100	mA
I_{CC}	Supply current	V_{CC} = MAX, See Note 2		100	160		100	160	mA

† For conditions shown as MIN or MAX, use the appropriate value specified under recommended operating conditions.
‡ All typical values are at V_{CC} = 5 V, T_A = 25°C.
§ Not more than one output should be shorted at a time, and duration of the short-circuit should not exceed one second.
NOTE 2: I_{CC} is measured after applying a momentary 4.5 V, then ground, to the clock input with all other inputs grounded and the outputs open.

switching characteristics, V_{CC} = 5 V, T_A = 25°C

PARAMETER¶	FROM (INPUT)	TO (OUTPUT)	TEST CONDITIONS	U/D = HIGH			U/D = LOW			UNIT
				MIN	TYP	MAX	MIN	TYP	MAX	
f_{max}			C_L = 15 pF, R_L = 280 Ω, See Figures 2 and 3 and Note 3	40	70		40	55		MHz
t_{PLH}	CLK	$\overline{RCO}$			14	21		14	21	ns
t_{PHL}					20	28		20	28	
t_{PLH}	CLK	Any Q			8	15		8	15	ns
t_{PHL}					11	15		11	15	
t_{PLH}	$\overline{ENT}$	$\overline{RCO}$			7.5	11		6	12	ns
t_{PHL}					15	22		15	25	
t_{PLH}◇	U/$\overline{D}$	$\overline{RCO}$			9	15		8	15	ns
t_{PHL}◇					10	15		16	22	

¶ t_{max} = maximum clock frequency
t_{PLH} = propagation delay time, low-to-high-level output
t_{PHL} = propagation delay time, high-to-low-level output
Propagation delay time from up/down to ripple carry must be measured with the counter at either a minimum or a maximum count. As the logic level of the up/down input is changed, the ripple carry output will follow. If the count is minimum (0), the ripple carry output transition will be in phase. If the count is maximum (15 for 'S169), the ripple carry output will be out of phase.
NOTE 3: Load circuits and voltage waveforms are shown in Section 1.

PARAMETER MEASUREMENT INFORMATION

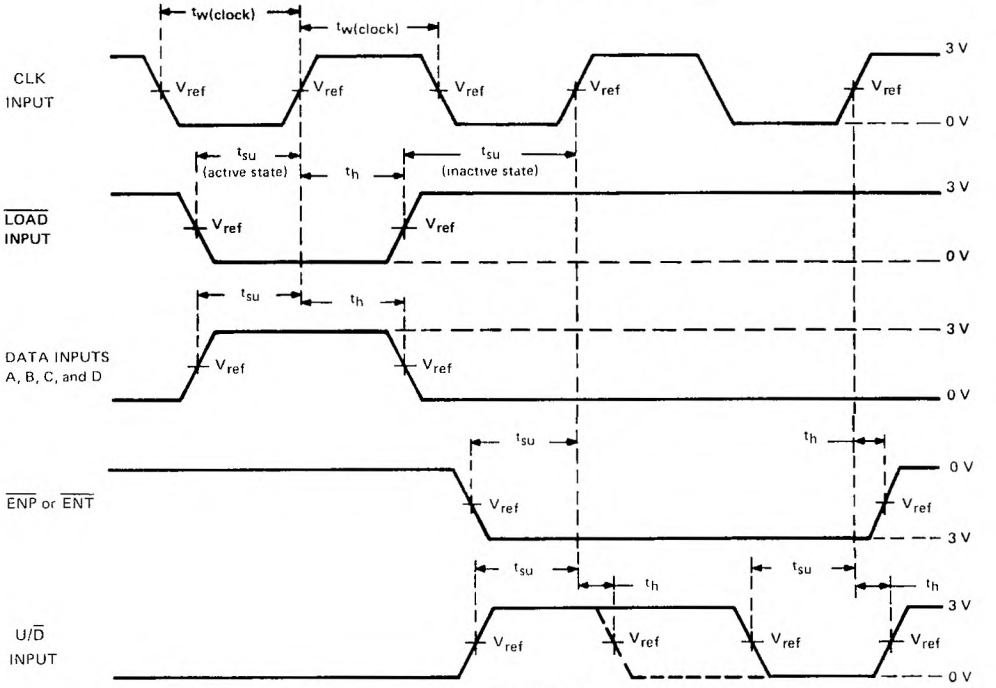

VOLTAGE WAVEFORMS

NOTES: A. The input pulses are supplied by a generator having the following characteristics: PRR ≤ 1 MHz, duty cycle ≤ 50%, Z_{out} ≈ 50 Ω; for 'LS169B, t_r ≤ 15 ns; t_f ≤ 6 ns, and for 'S169, t_r ≤ 2.5 ns, t_f ≤ 2.5 ns.
B. For 'LS169B, V_{ref} = 1.3 V; for 'S168 and 'S169, V_{ref} = 1.5 V.

FIGURE 1—PULSE WIDTHS, SETUP TIMES, HOLD TIMES

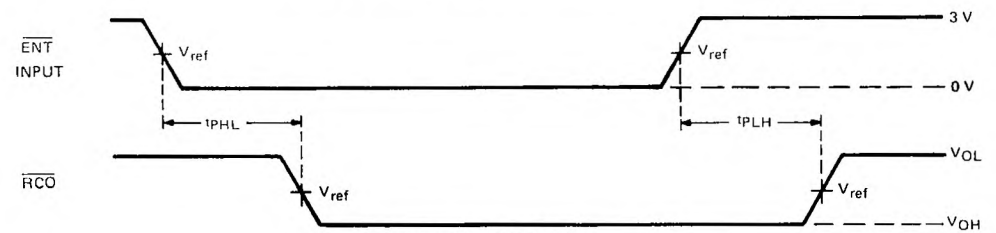

VOLTAGE WAVEFORMS

NOTES: A. The input pulses are supplied by a generator having the following characteristics: PRR ≤ MHz, duty cycle ≤ 50%, Z_{out} ≈ 50 Ω, for 'LS169B, t_r ≤ 15 ns, t_f ≤ 5 ns; and for 'S169, t_r ≤ 2.5 ns, t_f ≤ 2.5 ns.
B. t_{PLH} and t_{PHL} from enable T input to ripple carry output assume that the counter is at the maximum count, all Q outputs high.
C. For 'LS169B, V_{ref} = 1.3 V; for 'S169, V_{ref} = 1.5 V.
D. Propagation delay time from up/down to ripple carry must be measured with the counter at either a minimum or a maximum count. As the logic level of the up/down input is changed, the ripple carry output will follow. If the count is minimum (0) the ripple carry output transition will be in phase. If the count is maximum (15), the ripple carry output will be out of phase.

FIGURE 2—PROPAGATION DELAY [illegible] TO CARRY OUTPUT

TEXAS INSTRUMENTS
POST OFFICE BOX 655012 • DALLAS, TEXAS 75265

PARAMETER MEASUREMENT INFORMATION

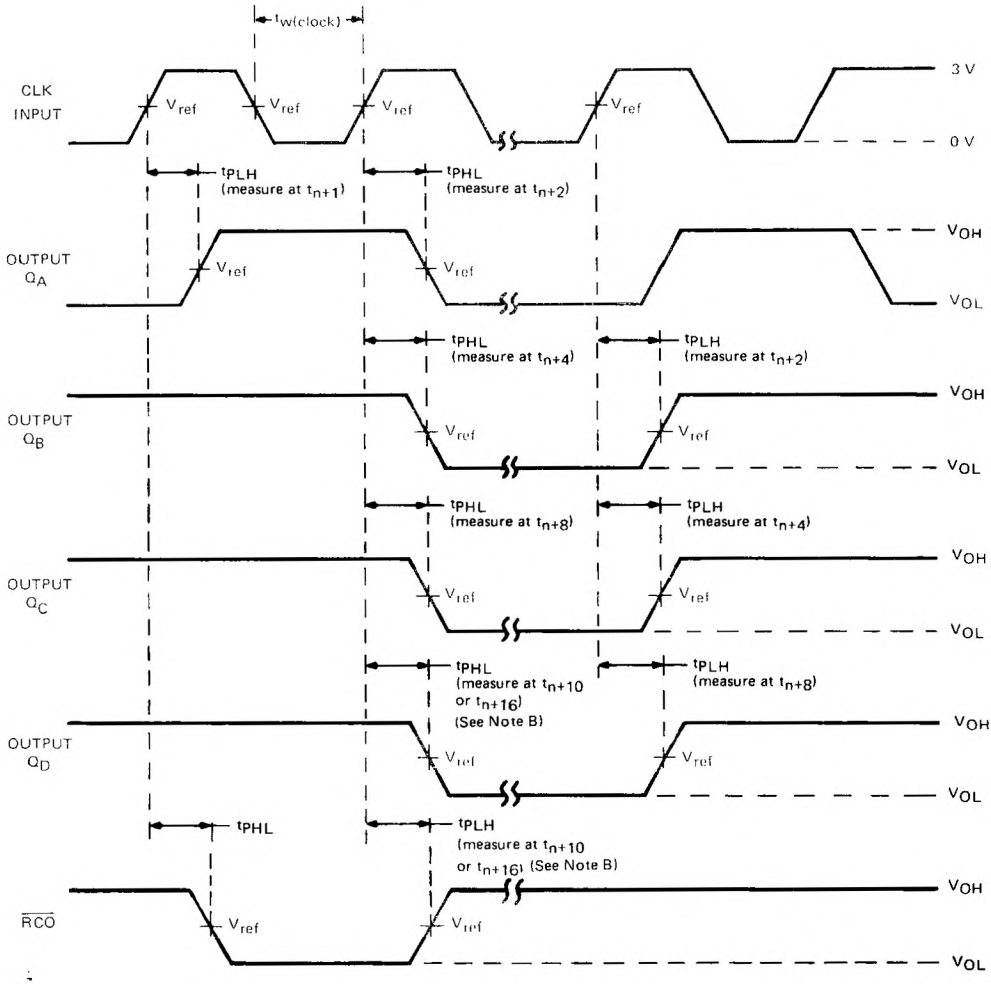

UP-COUNT VOLTAGE WAVEFORMS

NOTES: A. The input pulses are supplied by a generator having the following characteristics: PRR ≤ 1 MHz, duty cycle ≤50%, $Z_{out} \approx 50\ \Omega$; for 'LS169B, $t_r \leq 15$ ns; $t_f \leq 6$ ns, and 'S169, $t_r \leq 2.5$ ns, $t_f \leq 2.5$ ns. Vary PRR to measure f_{max}.
B. Outputs Q_D and carry are tested at $t_n + 16$, where t_n is the bit-time when all outputs are low.
C. For 'LS169B, $V_{ref} = 1.3$ V; for 'S169, $V_{ref} = 1.5$ V.

FIGURE 3—PROPAGATION DELAY TIMES FROM CLOCK

MARCH 1974 – REVISED MARCH 1988

- Separate Read/Write Addressing Permits Simultaneous Reading and Writing
- Fast Access Times . . . Typically 20 ns
- Organized as 4 Words of 4 Bits
- Expandable to 1024 Words of n-Bits
- For Use as:
  Scratch-Pad Memory
  Buffer Storage between Processors
  Bit Storage in Fast Multiplication Designs
- Open-Collector Outputs with Low Maximum Off-State Current:
  '170 . . . 30 μA
  'LS170 . . . 20 μA
- SN54LS670 and SN74LS670 Are Similar But Have 3-State Outputs

SN54170, SN54LS170 . . . J OR W PACKAGE
SN74170 . . . N PACKAGE
SN74LS170 . . . D OR N PACKAGE
(TOP VIEW)

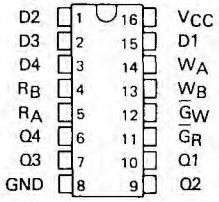

SN54LS170 . . . FK PACKAGE
(TOP VIEW)

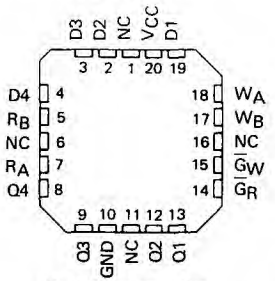

NC - No internal connection

description

The '170 and 'LS170 MSI 16-bit TTL register files incorporate the equivalent of 98 gates. The register file is organized as 4 words of 4 bits each and separate on-chip decoding is provided for addressing the four word locations to either write-in or retrieve data. This permits simultaneous writing into one location and reading from another word location.

Four data inputs are available which are used to supply the 4-bit word to be stored. Location of the word is determined by the write-address inputs A and B in conjunction with a write-enable signal. Data applied at the inputs should be in its true form. That is, if a high-level signal is desired from the output, a high level is applied at the data input for that particular bit location. The latch inputs are arranged so that new data will be accepted only if both internal address gate inputs are high. When this condition exists, data at the D input is transferred to the latch output. When the write-enable input, $\overline{G}_W$, is high, the data inputs are inhibited and their levels can cause no change in the information stored in the internal latches. When the read-enable input, $\overline{G}_R$, is high, the data outputs are inhibited and remain high.

The individual address lines permit direct acquisition of data stored in any four of the latches. Four individual decoding gates are used to complete the address for reading a word. When the read address is made in conjunction with the read-enable signal, the word appears at the four outputs.

This arrangement—data-entry addressing separate from data-read addressing and individual sense line—eliminates recovery times, permits simultaneous reading and writing, and is limited in speed only by the write time (30 nanoseconds typical) and the read time (25 nanoseconds typical). The register file has a nondestructive readout in that data is not lost when addressed.

All '170 inputs and all inputs except the read enable and write enable of the 'LS170 are buffered to lower the drive requirements to one Series 54/74 or Series 54LS/74LS standard load, respectively. Input-clamping diodes minimize switching transients to simplify system design. High-speed, double-ended AND-OR-INVERT gates are employed for the read-address function and drive high-sink-current, open-collector outputs. Up to 256 of these outputs may be wire-AND connected for increasing the capacity up to 1024 words. Any number of these registers may be paralleled to provide n-bit word length.

The SN54170 and SN54LS170 are characterized for operation over the full military temperature range of −55°C to 125°C; the SN74170 and SN74LS170 are characterized for operation from 0°C to 70°C.

PRODUCTION DATA documents contain information current as of publication date. Products conform to specifications per the terms of Texas Instruments standard warranty. Production processing does not necessarily include testing of all parameters.

logic diagram (positive logic)

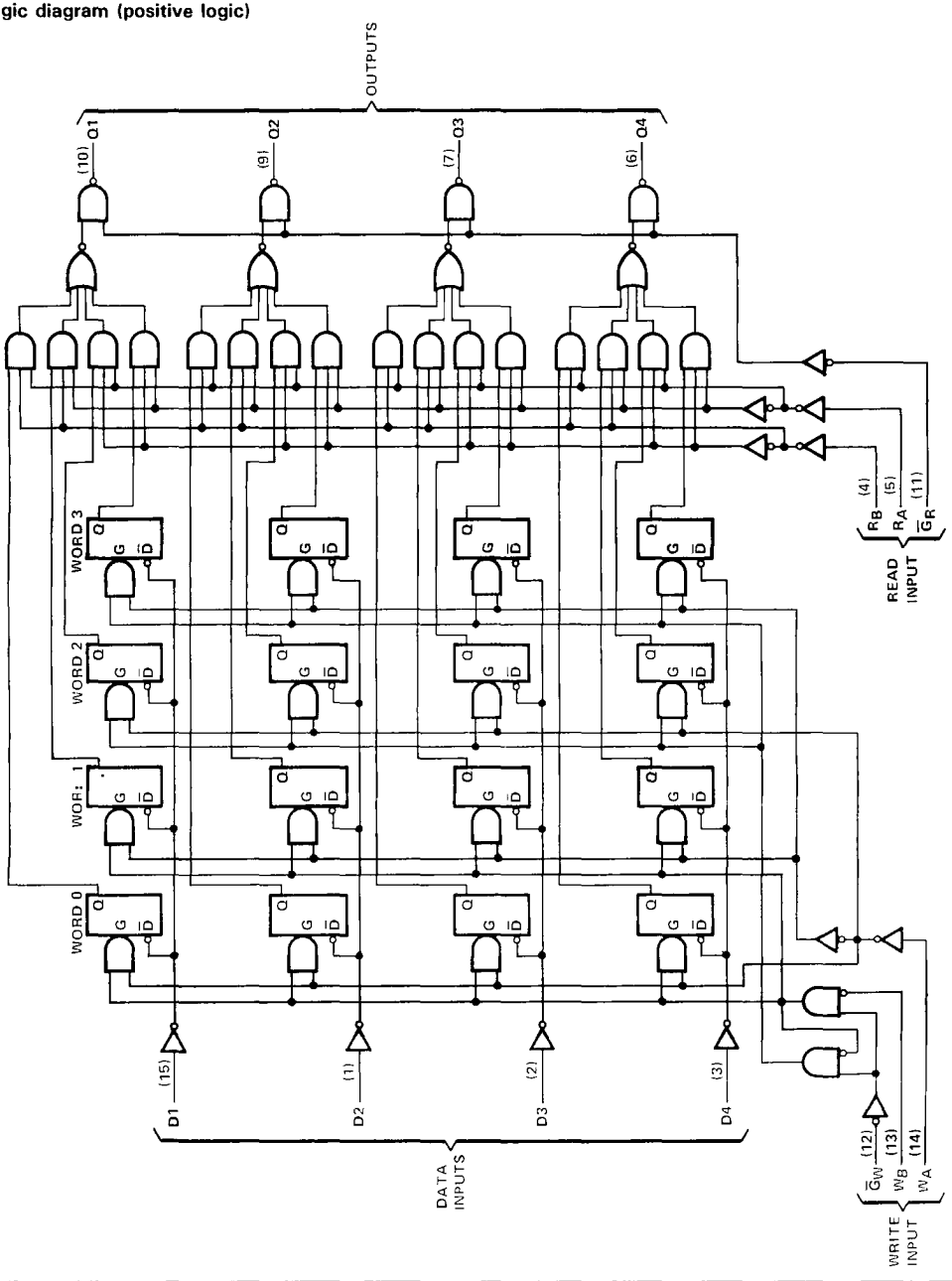

Pin numbers shown are for D, J, N, and W packages.

TEXAS INSTRUMENTS
POST OFFICE BOX 655012 • DALLAS, TEXAS 75265

logic diagram (positive logic)

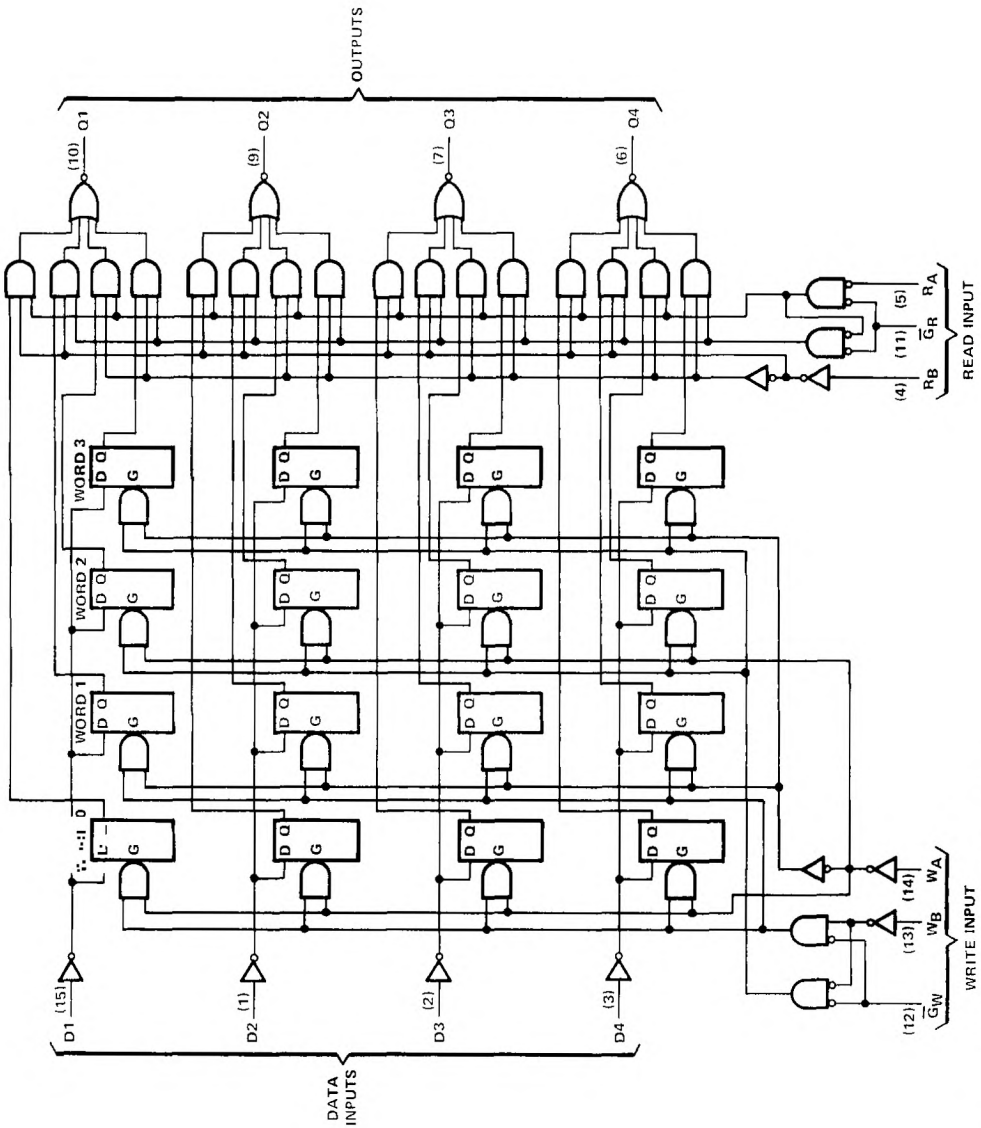

Pin numbers shown are for D, J, N, and W packages.

WRITE FUNCTION TABLE (SEE NOTES A, B, AND C)

WRITE INPUTS			WORD			
W_B	W_A	$\overline{G}_W$	0	1	2	3
L	L	L	Q = D	Q_0	Q_0	Q_0
L	H	L	Q_0	Q = D	Q_0	Q_0
H	L	L	Q_0	Q_0	Q = D	Q_0
H	H	L	Q_0	Q_0	Q_0	Q = D
X	X	H	Q_0	Q_0	Q_0	Q_0

READ FUNCTION TABLE (SEE NOTES A AND D)

READ INPUTS			OUTPUTS			
R_B	R_A	$\overline{G}_R$	Q1	Q2	Q3	Q4
L	L	L	W0B1	W0B2	W0B3	W0B4
L	H	L	W1B1	W1B2	W1B3	W1B4
H	L	L	W2B1	W2B2	W2B3	W2B4
H	H	L	W3B1	W3B2	W3B3	W3B4
X	X	H	H	H	H	H

NOTES: A. H = high level, L = low level, X = irrelevant.
B. (Q = D) = The four selected internal flip-flop outputs will assume the states applied to the four external data inputs.
C. Q_0 = the level of Q before the indicated input conditions were established.
D. W0B1 = The first bit of word 0, etc.

absolute maximum ratings over operating free-air temperature range (unless otherwise noted)

Supply voltage, V_{CC} (see Note 1) . . . . . 7 V
Input voltage: '170 . . . . . 5.5 V
'LS170 . . . . . 7 V
Off-state output voltage: '170 . . . . . 5.5 V
'LS170 . . . . . 7 V
Operating free-air temperature range: SN54170, SN54LS170 (see Note 2) . . . . . −55°C to 125°C
SN74170, SN74LS170 . . . . . 0°C to 70°C
Storage temperature range . . . . . −65°C to 150°C

NOTES: 1. Voltage values are with respect to network ground terminal.
2. An SN54170 in the W package operating at free-air temperatures above 105°C requires a heat sink that provides a thermal resistance from case to free-air, $R_{\theta CA}$, of not more than 38°C/W.

logic symbols†

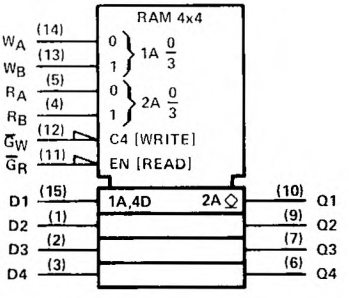

†This symbol is in accordance with ANSI/IEEE Std. 91-1984 and IEC Publication 617-12.
Pin numbers shown are for D, J, N, and W packages.

TEXAS INSTRUMENTS
POST OFFICE BOX 655012 • DALLAS, TEXAS 75265

recommended operating conditions

		SN54170			SN74170			UNIT
		MIN	NOM	MAX	MIN	NOM	MAX	
Supply voltage, V_{CC}		4.5	5	5.5	4.75	5	5.25	V
High-level output voltage, V_{OH}				5.5			5.5	V
Low-level output current, I_{OL}				16			16	mA
Width of write-enable or read-enable pulse, t_w		25			25			ns
Setup times, high- or low-level data (see Figure 2)	Data input with respect to write enable, $t_{su(D)}$	10			10			ns
	Write select with respect to write enable, $t_{su(W)}$	15			15			ns
Hold times, high- or low-level data (see Note 3 and Figure 2)	Data input with respect to write enable, $t_{h(D)}$	15			15			ns
	Write select with respect to write enable, $t_{h(W)}$	5			5			ns
Latch time for new data, t_{latch} (see Note 4)		25			25			ns
Operating free-air temperature range, T_A (see Note 2)		−55		125	0		70	°C

NOTES: 2. An SN54170 in the W package operating at free-air temperatures above 105°C requires a heat sink that provides a thermal resistance from case to free-air, $R_{\theta CA}$, of not more than 38°C/W.

3. Write select setup time will protect the data written into the previous address. If protection of data in the previous address is not required, $t_{su(W)}$ can be ignored as any address selection sustained for the final 30 ns of the write-enable pulse and during $t_{h(W)}$ will result in data being written into that location. Depending on the duration of the input conditions, one or a number of previous addresses may have been written into.

4. Latch time is the time allowed for the internal output of the latch to assume the state of new data. See Figure 2. This is important only when attempting to read from a location immediately after that location has received new data.

electrical characteristics over recommended operating free-air temperature range (unless otherwise noted)

PARAMETER		TEST CONDITIONS†		MIN	TYP‡	MAX	UNIT
V_{IH}	High-level input voltage			2			V
V_{IL}	Low-level input voltage					0.8	V
V_{IK}	Input clamp voltage	V_{CC} = MIN, I_I = −12 mA				−1.5	V
I_{OH}	High-level output current	V_{CC} = MIN, V_{OH} = 5.5 V, V_{IH} = 2 V, V_{IL} = 0.8 V				30	μA
V_{OL}	Low-level output voltage	V_{CC} = MIN, V_{IH} = 2 V, V_{IL} = 0.8 V, I_{OL} = 16 mA			0.2	0.4	V
I_I	Input current at maximum input voltage	V_{CC} = MAX, V_I = 5.5 V				1	mA
I_{IH}	High-level input current	V_{CC} = MAX, V_I = 2.4 V				40	μA
I_{IL}	Low-level input current	V_{CC} = MAX, V_I = 0.4 V				−1.6	mA
I_{CC}	Supply current	V_{CC} = MAX, See Note 5	SN54170		127§	140	mA
			SN74170		127§	150	

†For conditions shown as MIN or MAX, use the appropriate value specified under recommended operating conditions.
‡All typical values are at V_{CC} = 5 V, T_A = 25°C.
§Typical supply current shown is an average for 50% duty cycle.
NOTE 5: Maximum I_{CC} is guaranteed for the following worst-case conditions: 4.5 V is applied to all data inputs and both enable inputs, all address inputs are grounded, and all outputs are open.

switching characteristics, V_{CC} = 5 V, T_A = 25°C

PARAMETER†	FROM (INPUT)	TO (OUTPUT)	TEST CONDITIONS	MIN	TYP	MAX	UNIT
t_{PLH}	Read enable	Any Q	C_L = 15 pF, R_L = 400 Ω, See Figures 1 and 2		10	15	ns
t_{PHL}					20	30	
t_{PLH}	Read Select	Any Q			23	35	ns
t_{PHL}					30	40	
t_{PLH}	Write enable	Any Q	C_L = 15 pF, R_L = 400 Ω, See Figures 1 and 3		25	40	ns
t_{PHL}					34	45	
t_{PLH}	Data	Any Q			20	30	ns
t_{PHL}					30	45	

†t_{PLH} = propagation delay time, low-to-high-level output
t_{PHL} = propagation delay time, high-to-low-level output

schematics of inputs and outputs

'170

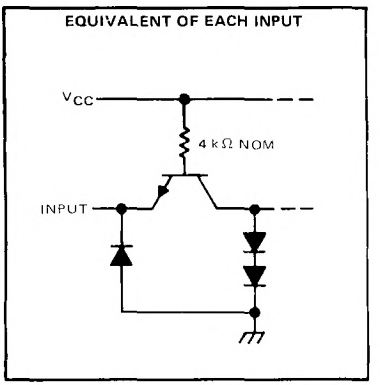

'170

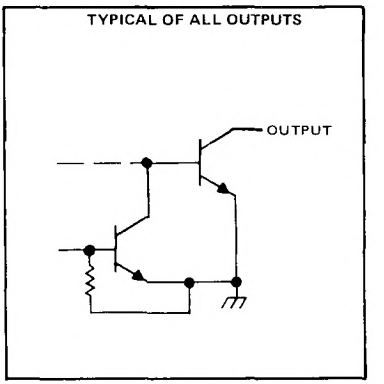

TEXAS INSTRUMENTS
POST OFFICE BOX 655012 • DALLAS, TEXAS 75265

recommended operating conditions

		SN54LS170			SN74LS170			UNIT
		MIN	NOM	MAX	MIN	NOM	MAX	
Supply voltage, V_{CC}		4.5	5	5.5	4.75	5	5.25	V
High-level output voltage, V_{OH}				5.5			5.5	V
Low-level output current, I_{OL}				4			8	mA
Width of write-enable or read-enable pulse, t_w		25			25			ns
Setup times, high- or low-level data (see Figure 2)	Data input with respect to write enable, $t_{su(D)}$	10			10			ns
	Write select with respect to write enable, t_s	15			15			ns
Hold times, high- or low-level data (see Note 3 and Figure 2)	Data input with respect to write enable, $t_{h(D)}$	15			15			ns
	Write select with respect to write enable, $t_{h(W)}$	5			5			ns
Latch time for new data, t_{latch} (see Note 4)		25			25			ns
Operating free-air temperature range, T_A		−55		125	0		70	°C

NOTES: 3. Write-select setup time will protect the data written into the previous address. If protection of data in the previous address is not required, $t_{su(W)}$ can be ignored as any address selection sustained for the final 30 ns of the write-enable pulse and during $t_{h(W)}$ will result in data being written into that location. Depending on the duration of the input conditions, one or a number of previous addresses may have been written into.

4. Latch time is the time allowed for the internal output of the latch to assume the state of new data. See Figure 2. This is important only when attempting to read from a location immediately after that location has received new data.

electrical characteristics over recommended operating free-air temperature range (unless otherwise noted)

PARAMETER			TEST CONDITIONS†		SN54LS170			SN74LS170			UNIT
					MIN	TYP‡	MAX	MIN	TYP‡	MAX	
V_{IH}	High-level input voltage				2			2			V
V_{IL}	Low-level input voltage						0.7			0.8	V
V_{IK}	Input clamp voltage		V_{CC} = MIN,	I_I = −18 mA			−1.5			−1.5	V
I_{OH}	High-level output current		V_{CC} = MIN, V_{IL} = V_{IL} max,	V_{OH} = 5.5 V, V_{IH} = 2 V			100			100	μA
V_{OL}	Low-level output voltage		V_{CC} = MIN, V_{IH} = 2 V, V_{IL} = V_{IL} max	I_{OL} = 4 mA		0.25	0.4		0.25	0.4	V
				I_{OL} = 8 mA					0.35	0.5	
I_I	Input current at maximum input voltage	Any D, R, or W	V_{CC} = MAX,	V_I = 7 V			0.1			0.1	mA
		$\overline{G}_R$ or $\overline{G}_W$					0.2			0.2	
I_{IH}	High-level input current	Any D, R, or W	V_{CC} = MAX,	V_I = 2.7 V			20			20	μA
		$\overline{G}_R$ or $\overline{G}_W$					40			40	
I_{IL}	Low-level input current	Any D, R, or W	V_{CC} = MAX,	V_I = 0.4 V			−0.4			−0.4	mA
		$\overline{G}_R$ or $\overline{G}_W$					−0.8			−0.8	
I_{CC}	Supply current		V_{CC} = MAX,	See Note 5		25	40		25	40	mA

†For conditions shown as MIN or MAX, use the appropriate value specified under recommended operating conditions.
‡All typical values are at V_{CC} = 5 V, T_A = 25°C.
NOTE 5: I_{CC} is measured under the following worst-case conditions: 4.5 V is applied to all data inputs and both enable inputs, all address inputs are ground, and all outputs are open.

switching characteristics, V_{CC} = 5 V, T_A = 25°C

PARAMETER†	FROM (INPUT)	TO (OUTPUT)	TEST CONDITIONS	MIN	TYP	MAX	UNIT
t_{PLH}	Read enable	Any Q	C_L = 15 pF, R_L = 2 kΩ, See Figures 1 and 2		20	30	ns
t_{PHL}					20	30	
t_{PLH}	Read select	Any Q			25	40	ns
t_{PHL}					24	40	
t_{PLH}	Write enable	Any Q	C_L = 15 pF, R_L = 2 kΩ, See Figures 1 and 3		30	45	ns
t_{PHL}					26	40	
t_{PLH}	Data	Any Q			30	45	ns
t_{PHL}					22	35	

†t_{PLH} = propagation delay time, low-to-high-level output
t_{PHL} = propagation delay time, high-to-low-level output

schematics of inputs and outputs

'LS170

EQUIVALENT OF EACH INPUT

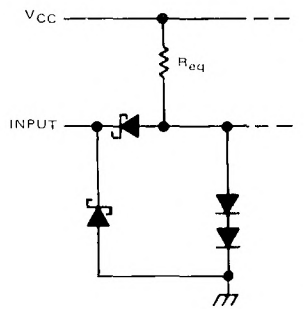

Any D, R, or W R_{eq} 20 kΩ NOM
$\overline{G}_R$ or $\overline{G}_W$ R_{eq} 10 kΩ NOM

'LS170

TYPICAL OF ALL OUTPUTS

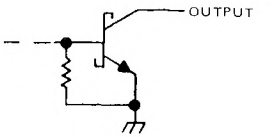

TEXAS INSTRUMENTS
POST OFFICE BOX 655012 • DALLAS, TEXAS 75265

PARAMETER MEASUREMENT INFORMATION

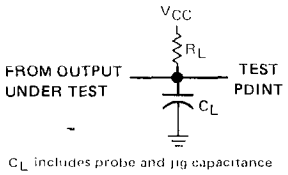

C_L includes probe and jig capacitance

LOAD CIRCUIT

FIGURE 1

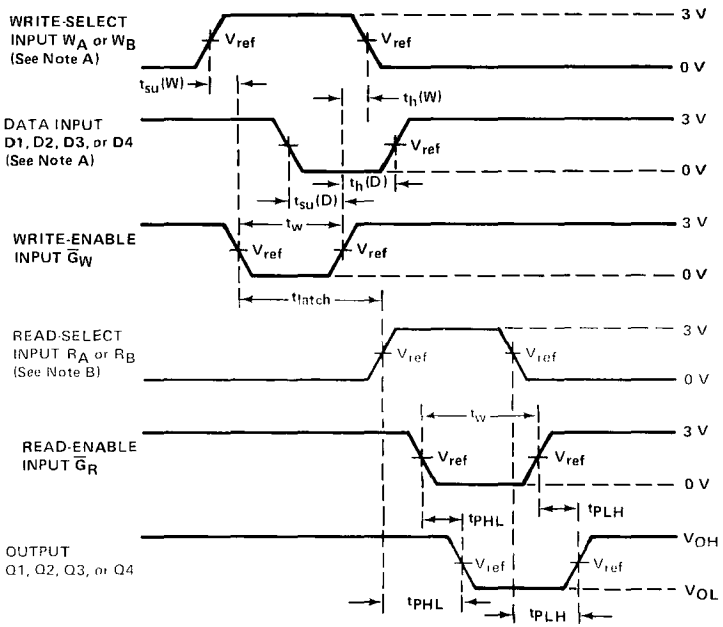

VOLTAGE WAVEFORMS

FIGURE 2

NOTES: A. High-level input pulses at the select and data inputs are illustrated in Figure 2; however, times associated with low-level pulses are measured from the same reference points.

B. When measuring delay times from a read-select input, the read-enable input is low. When measuring delay times from the read-enable input, both read-select inputs have been established at steady states.

C. In Figure 3, each select address is tested. Prior to the start of each of the above tests, both write and read address inputs are stablized with $W_A = R_A$ and $W_B = R_B$. During the test G_R is low.

D. Input waveforms are supplied by generators having the following characteristics: PRR ⩽ 1 MHz, $Z_{out} \approx 50\ \Omega$, duty cycle ⩽ 50%, t_r ⩽ 10 ns and t_f ⩽ 10 ns for '170, and t_r ⩽ 15 ns and t_f ⩽ 6 ns for 'LS170.

E. For '170, V_{ref} = 1.5 V; for 'LS170, V_{ref} = 1.3 V.

PARAMETER MEASUREMENT INFORMATION

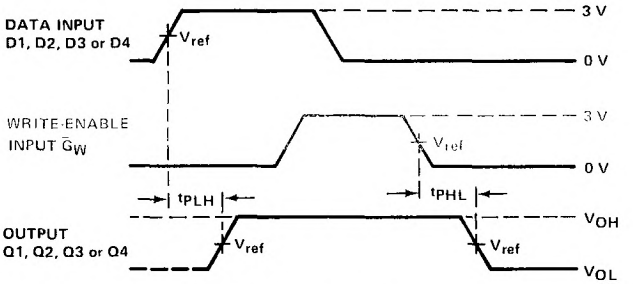

VOLTAGE WAVEFORM 1

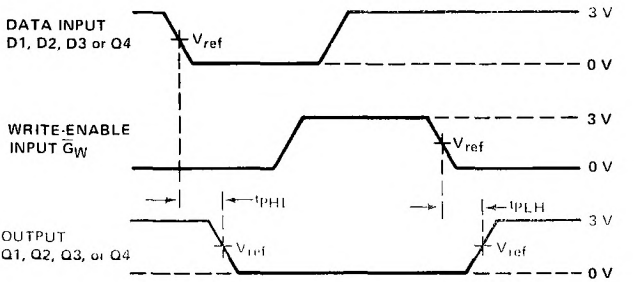

VOLTAGE WAVEFORM 2

FIGURE 3

NOTES: A. High-level input pulses at the select and data inputs are illustrated in Figure 2; however, times associated with low-level pulses are measured from the same reference points.

B. When measuring delay times from a read-select input, the read-enable input is low. When measuring delay times from the read-enable input, both read-select inputs have been established at steady states.

C. In Figure 3, each select address is tested. Prior to the start of each of the above tests, both write and read address inputs are stabilized with $W_A = R_A$ and $W_B = R_B$. During the test G_R is low.

D. Input waveforms are supplied by generators having the following characteristics: PRR ⩽ 1 MHz, $Z_{out} \approx 50\ \Omega$, duty cycle ⩽ 50%, t_r ⩽ 10 ns and t_f ⩽ 10 ns for '170, and t_r ⩽ 15 ns and t_f ⩽ 6 ns for 'LS170.

E. For '170, V_{ref} = 1.5 V; for 'LS170, V_{ref} = 1.3 V.

TEXAS INSTRUMENTS
POST OFFICE BOX 655012 • DALLAS, TEXAS

DECEMBER 1983 – REVISED MARCH 1988

- **Contains Four Flip-Flops with Double Rail Outputs**
- **Buffered Clock and Clear Inputs**
- **Individual Data Inputs to Each Flip-Flop**

SN54LS171 . . . J OR W PACKAGE
SN74LS171 . . . D OR N PACKAGE
(TOP VIEW)

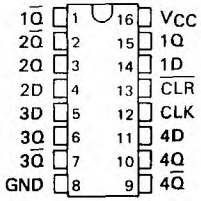

SN54LS171 . . . FK PACKAGE
(TOP VIEW)

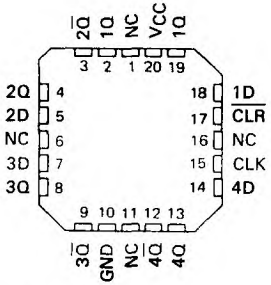

NC–No internal connection

description

These monolithic, positive-edge triggered flip-flops utilize the latest low-power Schottky circuitry to implement D-type flip-flop logic. They have a direct clear input and complementary outputs from each flip-flop.

Information at the D inputs meeting the setup time requirements is transferred to the Q outputs on the positive-going edge of the clock pulse. Clock triggering occurs at a particular voltage level and is not directly related to the transition time of the positive going pulse. When the clock input is at either the high or low level, the D input signal has no effect at the output.

FUNCTION TABLE
(EACH FLIP-FLOP)

INPUTS			OUTPUTS	
$\overline{CLR}$	CLK	D	Q	$\overline{Q}$
L	X	X	L	H
H	↑	H	H	L
H	↑	L	L	H
H	L	X	Q_0	$\overline{Q}_0$

logic diagram (positive logic)

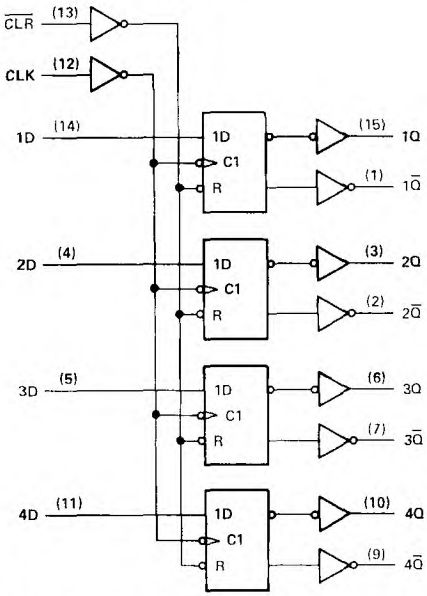

Pin numbers shown are for D, J, N, and W packages

logic symbol†

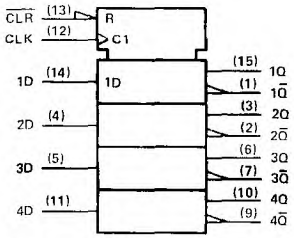

† This symbol is in accordance with ANSI/IEEE Std 91-1984 and IEC Publication 617-12.

PRODUCTION DATA documents contain information current as of publication date. Products conform to specifications per the terms of Texas Instruments standard warranty. Production processing does not necessarily include testing of all parameters.

schematics of inputs and outputs

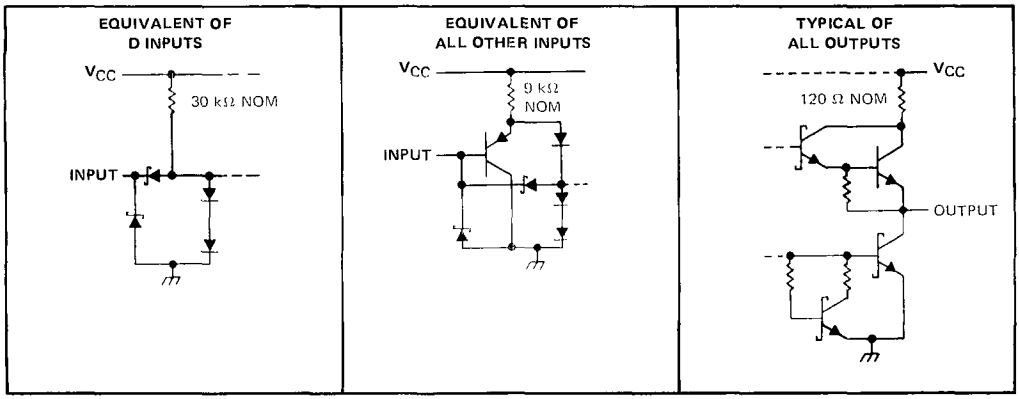

absolute maximum ratings over operating free-air temperature range (unless otherwise noted)

Supply voltage, V_{CC} (See Note 1) . . . . . 7 V
Input voltage . . . . . 7 V
Operating free-air temperature range: SN54LS171 Circuits . . . . . −55°C to 125°C
SN74LS171 Circuits . . . . . 0°C to 70°C
Storage temperature range . . . . . −65°C to 150°C

NOTE 1: Voltage values are with respect to network ground terminal.

recommended operating conditions

			SN54LS171			SN74LS171			UNIT
			MIN	NOM	MAX	MIN	NOM	MAX	
V_{CC}	Supply voltage		4.5	5	5.5	4.75	5	5.25	V
V_{IH}	High-level input voltage		2			2			V
V_{IL}	Low-level input voltage				0.7			0.8	V
I_{OH}	High-level output current				−0.4			−0.4	mA
I_{OL}	Low-level output current				4			8	mA
f_{clock}	Clock frequency		0		20	0		20	MHz
t_w	Width of clock or clear pulse		20			20			ns
t_{su}	Setup time	Data input	20			20			ns
		Clear inactive-state	25			25			
t_h	Data hold time		5			5			ns
T_A	Operating free-air temperature		−55		125	0		70	°C

TEXAS INSTRUMENTS
POST OFFICE BOX 655012 • DALLAS, TEXAS 75265

electrical characteristics over recommended operating free-air temperature range (unless otherwise noted)

PARAMETER			TEST CONDITIONS†		SN54LS171			SN74LS171			UNIT
					MIN	TYP‡	MAX	MIN	TYP‡	MAX	
V_{IK}	Input clamp voltage		V_{CC} = MIN, I_I = −18 mA				−1.5			−1.5	V
V_{OH}	High-level output voltage		V_{CC} = MIN, V_{IH} = 2 V, V_{IL} = MAX	I_{OH} = −1 mA	2.5	3.4		2.7	3.4		V
V_{OL}	Low-level output voltage		V_{CC} = MIN, V_{IH} = 2 V, V_{IL} = MAX	I_{OL} = 4 mA		0.25	0.4		0.25	0.4	V
				I_{OL} = 8 mA					0.35	0.5	V
I_I	Input current at maximum input voltage		V_{CC} MAX, V_I = 7 V				0.1			0.1	mA
I_{IH}	High-level input current		V_{CC} = MAX, V_I = 2.7 V				20			20	μA
I_{IL}	Low-level input current	D inputs	V_{CC} = MAX, V_I = 0.4 V				−0.4			−0.4	mA
		All others					−0.2			−0.2	mA
I_{OS}§	Short-circuit output current		V_{CC} = MAX, V_O = 0 V		−20		−100	−20		−100	mA
I_{CC}	Supply current		V_{CC} = MAX, See Note 1			14	25		14	25	mA

† For conditions shown as MIN or MAX, use the appropriate value specified under recommended operating conditions.
‡ All typical values are at V_{CC} = 5 V, T_A = 25°C.
§ Not more than one output should be shorted at a time and the duration of the short-circuit should not exceed one second.
NOTE 1: I_{CC} is measured with all inputs grounded and all outputs open.

switching characteristics, V_{CC} = 5 V, T_A = 25°C (see note 2)

PARAMETER	FROM (INPUT)	TO (OUTPUT)	TEST CONDITIONS	'LS171			UNIT
				MIN	TYP	MAX	
f_{max}			R_L = 2 kΩ, C_L = 15 pF	20	30		MHz
t_{PLH}	CLK	Q, $\overline{Q}$			15	25	ns
t_{PHL}					18	30	ns
t_{PLH}	$\overline{CLR}$	Q			18	30	ns
t_{PHL}					24	40	ns

NOTE 2: Load circuits and voltage waveforms are shown in Section 1.

16-BIT MULTIPLE-PORT REGISTER FILE WITH 3-STATE OUTPUTS

MAY 1972—REVISED MARCH 1988

- Independent Read/Write Addressing Permits Simultaneous Reading and Writing
- Organized as Eight Words of Two Bits Each
- Fast Access Times:
  From Read Enable . . . 15 ns Typical
  From Read Select . . . 33 ns Typical
- 3-State Outputs Simplify Use in Bus-Organized Systems
- Applications:
  Stacked Data Registers
  Scratch-Pad Memory
  Buffer Storage Between Processors
  Fast Multiplication Schemes

SN74172 . . . N PACKAGE
(TOP VIEW)

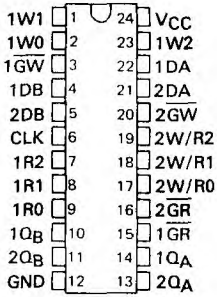

schematics of inputs and outputs

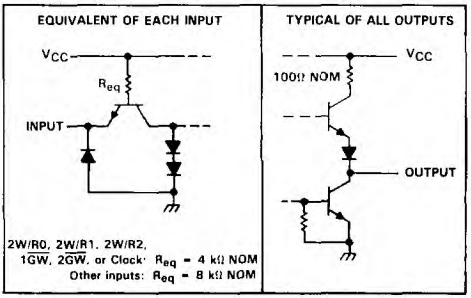

description

The SN74172, containing the equivalent of 201 gates on a monolithic chip, is a high-performance 16-bit register file organized as eight words of two bits each.

Multiple address decoding circuitry is used so that the read and write operation can be performed independently on two word locations. This provides a true simultaneous read/write capability. Basically, the file consists of two distinct sections (see Figure 1).

Section 1 permits the writing of data into any two-bit word location while reading two bits of data from another location simultaneously. To provide this flexibility, independent decoding is incorporated.

Section 2 of the register file is similar to section 1 with the exception that common read/write address circuitry is employed. This means that section 2 can be utilized in one of three modes:

1) Writing new data into two bits
2) Reading from two bits
3) Writing into and simultaneously reading from the same two bits.

Regardless of the mode, the operation of section 2 is entirely independent of section 1.

logic symbol†

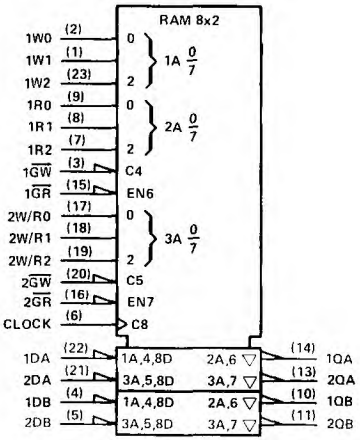

†This symbol is in accordance with ANSI/IEEE Std. 91-1984 and IEC Publication 617-12.

PRODUCTION DATA documents contain information current as of publication date. Products conform to specifications per the terms of Texas Instruments standard warranty. Production processing does not necessarily include testing of all parameters.

description (continued)

The three-state outputs of this register file permit connection of up to 129 compatible outputs and one Series 54/74 high-logic-level load to a common system bus. The outputs are controlled by the read-enable circuitry so that they operate as standard TTL totem-pole outputs when the appropriate read-enable input is low or they are placed in a high-impedance state when the associated read-enable input is at a high logic level. To minimize the possibility that two outputs from separate register files will attempt to take a common bus to opposite logic levels, the read-enable circuitry is designed such that disable times are shorter than enable times.

All inputs are buffered to lower the drive requirements of the clock, read/write address, and write-enable inputs to one normalized Series 54/74 load, and of all other inputs to one-half of one normalized Series 54/74 load.

Functions of the inputs and outputs of the SN74172 are as shown in the following table.

FUNCTION	SECTION 1	SECTION 2	DESCRIPTION
Write Address	1W0, 1W1, 1W2	2W/R0, 2W/R1, 2W/R2	Binary write address selects one of eight two-bit word locations.
Write Enable	$1\overline{GW}$	$2\overline{GW}$	When low, permits the writing of new data into the selected word location on a positive transition of the clock input.
Data Inputs	1DA, 1DB	2DA, 2DB	Data at these inputs is entered on a positive transition of the clock input into the location selected by the write address inputs if the write enable input is low. Since the two sections are independent, it is possible for both write functions to be activated with both write addresses selecting the same word location. If this occurs and the information at the data inputs is not the same for both sections (i.e., 1DA ≠ 2DA and/or 1DB ≠ 2DB) the low-level data will predominate in each bit and be stored.
Read Address	1R0, 1R1, 1R2	Common with write address	Binary write address selects one of eight two-bit word locations.
Read Enable	$1\overline{GR}$	$2\overline{GR}$	When read enable is low, the outputs assume the levels of the data stored in the location selected by read address inputs. When read enable is high, the associated outputs remain in the high-impedance state and neither significantly load nor drive the lines to which they are connected.
Data Outputs	$1Q_A$, $1Q_B$	$2Q_A$, $2Q_B$	
Clock	CK		The positive-going transition of the clock input will enter new data into the addressed location if the write enable input is low. The clock is common to both sections.

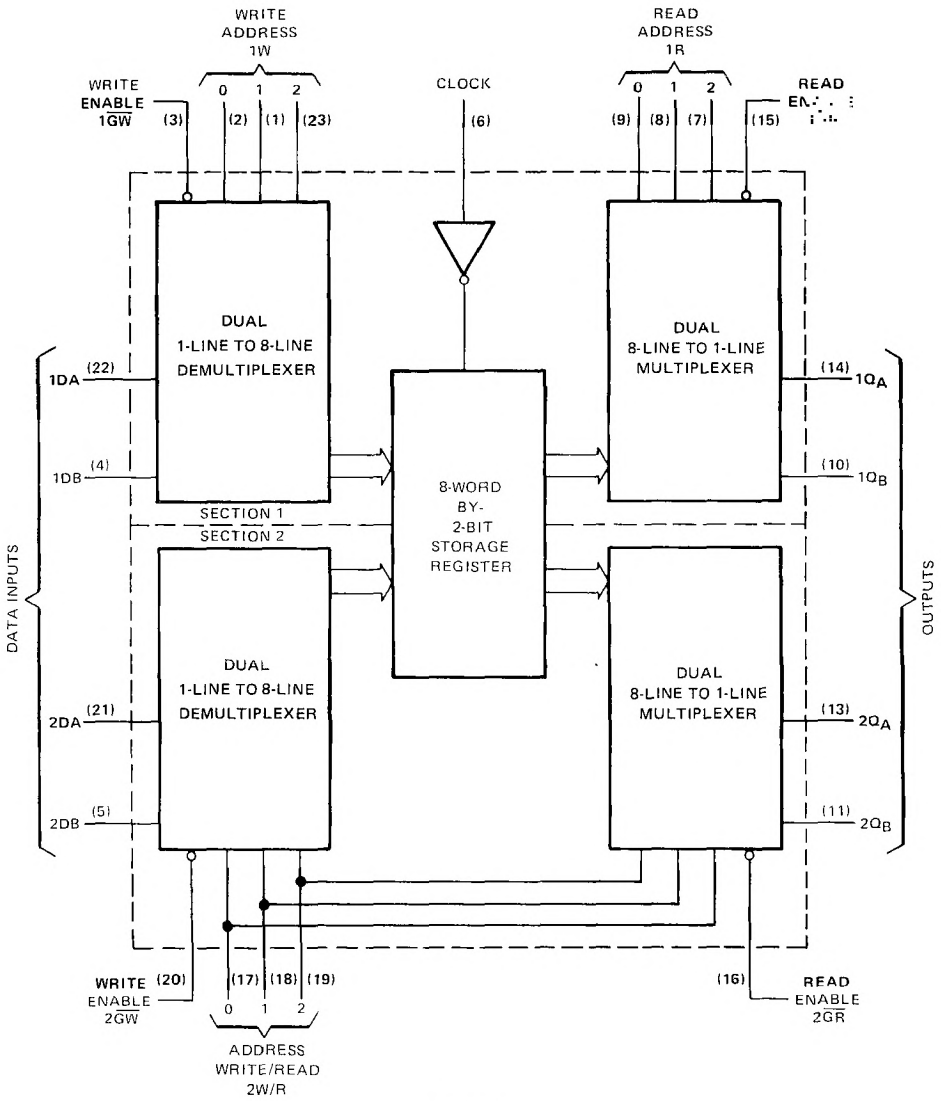
WRITE ADDRESS 1W
READ ADDRESS 1R
WRITE ENABLE 1GW
CLOCK
READ ENABLE 1GR
DUAL 1-LINE TO 8-LINE DEMULTIPLEXER
DUAL 8-LINE TO 1-LINE MULTIPLEXER
8-WORD BY-2-BIT STORAGE REGISTER
SECTION 1
SECTION 2
1DA
1DB
2DA
2DB
1QA
1QB
2QA
2QB
DATA INPUTS
OUTPUTS
WRITE ENABLE 2GW
READ ENABLE 2GR
ADDRESS WRITE/READ 2W/R

FIGURE 1

absolute maximum ratings over operating free-air temperature range (unless otherwise noted)

Supply voltage (see Note 1)	7 V
Input voltage	5.5 V
Output voltage (see Note 2)	5.5 V
Operating free-air temperature range	0°C to 70°C
Storage temperature	−65°C to 150°C

NOTES: 1. Voltage values are with respect to network ground terminal.
2. This is the maximum voltage which should be applied to any output when it is in the high-impedance state.

recommended operating conditions

		MIN	NOM	MAX	UNIT
Supply voltage, V_{CC}		4.75	5	5.25	V
High-level output current, I_{OH}				−5.2	mA
Low-level output current, I_{OL}				16	mA
Clock frequency, f_{clock}		0		20	MHz
Width of clock pulse, $t_{w(clock)}$		25			ns
Setup time, t_{su} (see Figure 1)	Write select	$t_{w(clock)}$+10			ns
	High-level data	30			
	Low-level data	45			
	Write enable	35			
Hold time, t_h (see Figure 1)	Write select	0			ns
	Write enable	0			
Data release time, $t_{release}$ (see Figure 1)	High-level data	0			ns
	Low-level data	0			
Operating free-air temperature, T_A		0		70	°C

electrical characteristics over recommended operating free-air temperature range (unless otherwise noted)

PARAMETER			TEST CONDITIONS†	MIN	TYP‡	MAX	UNIT
V_{IH}	High-level input voltage			2			V
V_{IL}	Low-level input voltage					0.8	V
V_{IK}	Input clamp voltage		V_{CC} = MIN, I_I = −12 mA			−1.5	V
V_{OH}	High-level output voltage		V_{CC} = MIN, V_{IH} = 2 V, V_{IL} = 0.8 V, I_{OH} = −5.2 mA	2.4	3		V
V_{OL}	Low-level output voltage		V_{CC} = MIN, V_{IH} = 2 V, V_{IL} = 0.8 V, I_{OL} = 16 mA		0.2	0.4	V
$I_{O(off)}$	Off-state (high-impedance state) output current		V_{CC} = MAX, V_O = 2.4 V			40	μA
			V_{CC} = MAX, V_O = 0.4 V			−40	
I_I	Input current at maximum input voltage		V_{CC} = MAX, V_I = 5.5 V			1	mA
I_{IH}	High-level input current		V_{CC} = MAX, V_I = 2.4 V			40	μA
I_{IL}	Low-level input current	2W/R0, 2W/R1, 2W/R2, 1$\overline{GW}$, 2$\overline{GW}$, or clock	V_{CC} = MAX, V_I = 0.4 V			−1.6	mA
		Any other input				−0.8	
I_{OS}	Short-circuit output current§		V_{CC} = MAX	−18		−55	mA
I_{CC}	Supply current		V_{CC} = MAX, All inputs at 4.5 V, Outputs open		112	170	mA

†For conditions shown as MIN or MAX, use the appropriate value specified under recommended operating conditions.
‡All typical values are at V_{CC} = 5 V, T_A = 25°C.
§Not more than one output should be shorted at a time.

TEXAS INSTRUMENTS
POST OFFICE BOX 655012 • DALLAS, TEXAS 75265

switching characteristics, V_{CC} = 5 V, T_A = 25°C, R_L = 400 Ω

	PARAMETER	TEST CONDITIONS	MIN	TYP	MAX	UNIT
f_{max}	Maximum clock frequency	C_L = 50 pF, See Figure 2	20			MHz
t_{PLH}	Propagation delay time, low-to-high-level output from read select			33	45	ns
t_{PHL}	Propagation delay time, high-to-low-level output from read select			30	45	
t_{PLH}	Propagation delay time, low-to-high-level output from clock			35	50	ns
t_{PHL}	Propagation delay time, high-to-low-level output from clock			35	50	
t_{PZH}	Output enable time to high level			14	30	ns
t_{PZL}	Output enable time to low level			16	30	
t_{PHZ}	Output disable time from high level	C_L = 5 pF, See Figure 2		6	20	ns
t_{PLZ}	Output disable time from low level			11	20	

PARAMETER MEASUREMENT INFORMATION

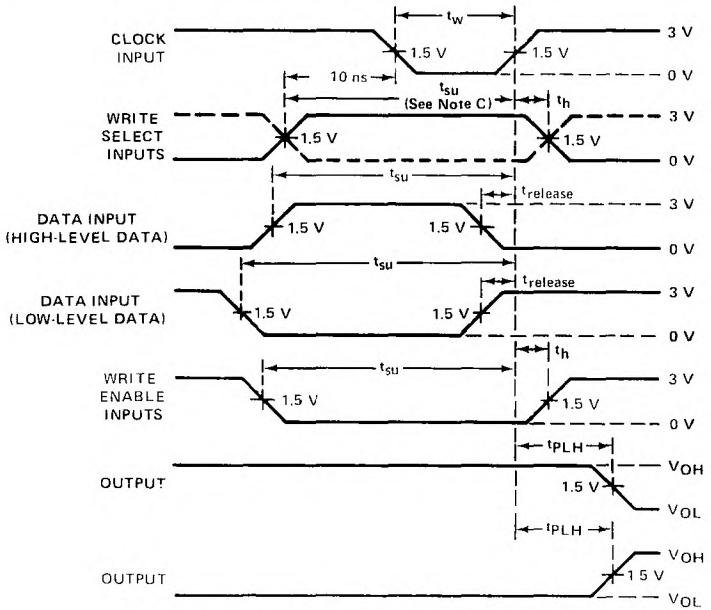

SWITCHING TIMES FROM CLOCK INPUT

VOLTAGE WAVEFORMS
FIGURE 2

PARAMETER MEASUREMENT INFORMATION

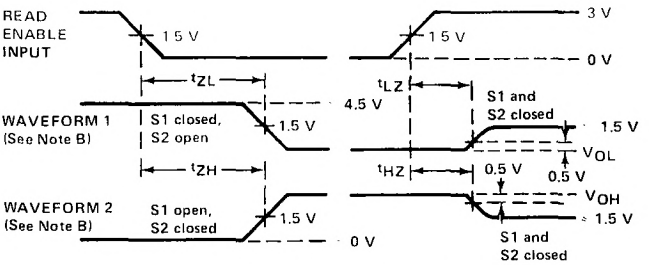

ENABLE AND DISABLE TIMES FROM READ ENABLE

NOTES: A. Input waveforms are supplied by pulse generators having the following characteristics: $t_r \leq 7$ ns, $t_f \leq$ ns, PRR = 1 MHz, $Z_{out} \approx 50\ \Omega$.

B. Waveform 1 is for an output with internal conditions such that the output is low except when disabled. Waveform 2 is for an output with internal conditions such that the output is high except when disabled.

C. Write select setup time, as specified, will protect data written into previous address.

D. Load circuit is shown on page

VOLTAGE WAVEFORMS

FIGURE 2 (continued)

TEXAS INSTRUMENTS
POST OFFICE BOX 655012 • DALLAS, TEXAS 75265

OCTOBER 1976—REVISED MARCH 1988

- 3-State Outputs Interface Directly with System Bus
- Gated Output-Control Lines for Enabling or Disabling the Outputs
- Fully Independent Clock Virtually Eliminates Restrictions for Operating in One of of Two Modes:

  Parallel Load
  Do Nothing (Hold)

- For application as Bus Buffer Registers

SN54173, SN54LS173A . . . J OR W PACKAGE
SN74173 . . . N PACKAGE
SN74LS173A . . . D OR N PACKAGE
(TOP VIEW)

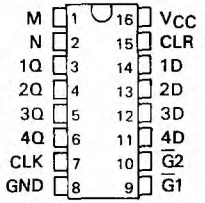

SN54LS173A . . . FK PACKAGE
(TOP VIEW)

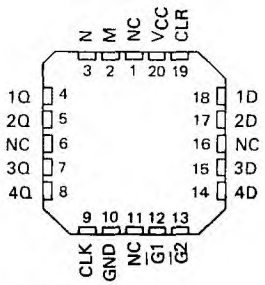

NC – No internal connection

TYPE	TYPICAL PROPAGATION DELAY TIME	MAXIMUM CLOCK FREQUENCY	TYPICAL POWER DISSIPATION
'173	23 ns	35 MHz	250 mW
'LS173A	18 ns	50 MHz	95 mW

description

The '173 and 'LS173A four-bit registers include D-type flip-flops featuring totem-pole three-state outputs capable of driving highly capacitive or relatively low-impedance loads. The high-impedance third state and increased high-logic-level drive provide these flip-flops with the capability of being connected directly to and driving the bus lines in a bus-organized system without need for interface or pull-up components. Up to 128 of the SN74173 or SN74LS173A outputs may be connected to a common bus and still drive two Series 54/74 or 54LS/74LS TTL normalized loads, respectively. Similarly, up to 49 of the SN54173 or SN54LS173A outputs can be connected to a common bus and drive one additional Series 54/74 or 54LS/74LS TTL normalized load, respectively. To minimize the possibility that two outputs will attempt to take a common bus to opposite logic levels, the output control circuitry is designed so that the average output disable times are shorter than the average output enable times.

FUNCTION TABLE

INPUTS					OUTPUT
		DATA ENABLE		DATA	
CLEAR	CLOCK	$\overline{G1}$	$\overline{G2}$	D	Q
H	X	X	X	X	L
L	L	X	X	X	Q_0
L	↑	H	X	X	Q_0
L	↑	X	H	X	Q_0
L	↑	L	L	L	L
L	↑	L	L	H	H

When either M or N (or both) is (are) high the output is disabled to the high-impedance state; however sequential operation of the flip-flops is not affected.

Gated enable inputs are provided on these devices for controlling the entry of data into the flip-flops. When both data-enable inputs are low, data at the D inputs are loaded into their respective flip-flops on the next positive transition of the buffered clock input. Gate output control inputs are also provided. When both are low, the normal logic states (high or low levels) of the four outputs are available for driving the loads or bus lines. The outputs are disabled independently from the level of the clock by a high logic level at either output control input. The outputs then present a high impedance and neither load nor drive the bus line. Detailed operation is given in the function table.

PRODUCTION DATA documents contain information current as of publication date. Products conform to specifications per the terms of Texas Instruments standard warranty. Production processing does not necessarily include testing of all parameters.

logic symbols†

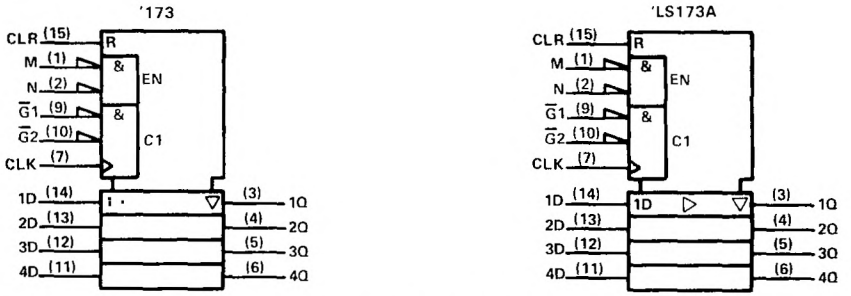

† These symbols are in accordance with ANSI/IEEE Std 91-1984 and IEC Publication 617-12.
Pin numbers shown are for D, J, N, and W packages.

2

TTL Devices

logic diagram (positive logic)

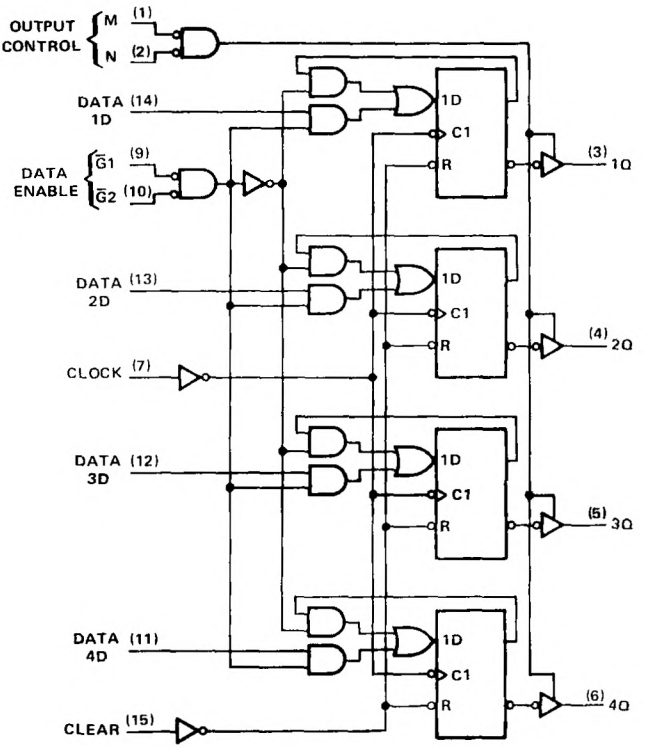

Pin numbers shown are for D, J, N, and W packages.

TEXAS INSTRUMENTS
POST OFFICE BOX 655012 • DALLAS, TEXAS 75265

absolute maximum ratings over operating free-air temperature range (unless otherwise noted)

Supply voltage, V_{CC} (see Note 1) . . . . . 7 V
Input voltage: '173 . . . . . 5.5 V
'LS173A . . . . . 7 V
Off-state output voltage . . . . . 5.5 V
Operating free-air temperature range: SN54173, SN54LS173A . . . . . −55°C to 125°C
SN74173, SN74LS173A . . . . . 0°C to 70°C
Storage temperature range . . . . . −65°C to 150°C

NOTE 1: Voltage values are with respect to network ground terminals.

schematics of inputs and outputs

'173

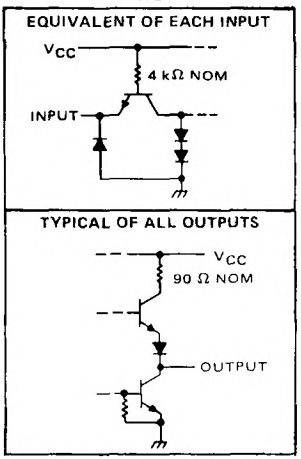

'LS173A

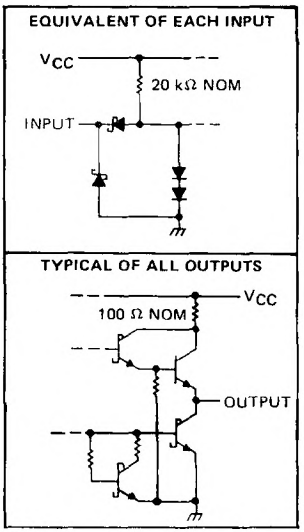

recommended operating conditions

		SN54173			SN74173			UNIT
		MIN	NOM	MAX	MIN	NOM	MAX	
Supply voltage, V_{CC}		4.5	5	5.5	4.75	5	5.25	V
High-level output current, I_{OH}				−2			−5.2	mA
Low-level output current, I_{OL}				16			16	mA
Input clock frequency, f_{clock}		0		25	0		25	MHz
Width of clock or clear, t_w		20			20			ns
Setup time, t_{su}	Data enable	17			17			ns
	Data	10			10			
	Clear inactive state	10			10			
Hold time, t_h	Data enable	2			2			ns
	Data	10			10			
Operating free-air temperature, T_A		−55		125	0		70	°C

electrical characteristics over recommended operating free-air temperature range (unless otherwise noted)

PARAMETER		TEST CONDITIONS†		MIN	TYP‡	MAX	UNIT
V_{IH}	High-level input voltage			2			V
V_{IL}	Low-level input voltage					0.8	V
V_{IK}	Input clamp voltage	V_{CC} = MIN, I_I = −12 mA				−1.5	V
V_{OH}	High-level output voltage	V_{CC} = MIN, V_{IH} = 2 V, V_{IL} = 0.8 V, I_{OH} = MAX		2.4			V
V_{OL}	Low-level output voltage	V_{CC} = MIN, V_{IH} = 2 V, V_{IL} = 0.8 V, I_{OL} = 16 mA				0.4	V
$I_{O(off)}$	Off-state (high-impedance state) output current	V_{CC} = MAX, V_{IH} = 2 V	V_O = 2.4 V			40	μA
			V_O = 0.4 V			−40	
I_I	Input current at maximum input voltage	V_{CC} = MAX, V_I = 5.5 V				1	mA
I_{IH}	High-level input current	V_{CC} = MAX, V_I = 2.4 V				40	μA
I_{IL}	Low-level input current	V_{CC} = MAX, V_I = 0.4 V				−1.6	mA
I_{OS}	Short-circuit output current§	V_{CC} = MAX		−30		−70	mA
I_{CC}	Supply current	V_{CC} = MAX, See Note 2			50	72	mA

†For conditions shown as MIN or MAX, use the appropriate value specified under recommended operating conditions.
‡All typical values are at V_{CC} = 5 V, T_A = 25°C.
§Not more than one output should be shorted at a time.
NOTE 2: I_{CC} is measured with all outputs open; clear grounded following momentary connection to 4.5 V; N, G1, G2, and all data inputs grounded; and the clock input and M at 4.5 V.

switching characteristics, V_{CC} = 5 V, T_A = 25°C, R_L = 400 Ω

PARAMETER		TEST CONDITIONS	MIN	TYP	MAX	UNIT
f_{max}	Maximum clock frequency	C_L = 50 pF, See Note 3	25	35		MHz
t_{PHL}	Propagation delay time, high-to-low-level output from clear input			18	27	ns
t_{PLH}	Propagation delay time, low-to-high-level output from clock input			28	43	ns
t_{PHL}	Propagation delay time, high-to-low-level output from clock input			19	31	
t_{PZH}	Output enable time to high level		7	16	30	ns
t_{PZL}	Output enable time to low level		7	21	30	
t_{PHZ}	Output disable time from high level	C_L = 5 pF, See Note 3	3	5	14	ns
t_{PLZ}	Output disable time from low level		3	11	20	

NOTE 3: Load circuits and voltage waveforms are shown in Section 1.

TEXAS INSTRUMENTS
POST OFFICE BOX 655012 • DALLAS, TEXAS 75265

recommended operating conditions

		SN54LS173A			SN74LS173A			UNIT
		MIN	NOM	MAX	MIN	NOM	MAX	
Supply voltage, V_{CC}		4.5	5	5.5	4.75	5	5.25	V
High-level output current, I_{OH}				−1			−2.6	mA
Low-level output current, I_{OL}				12			24	mA
Input clock frequency, f_{clock}		0		30	0		30	MHz
Width of clock or clear pulse, t_w		25			25			ns
Setup time, t_{su}	Data enable	35			35			ns
	Data	17			17			
	Clear inactive state	10			10			
Hold time, t_h	Data enable	0			0			ns
	Data	3			3			
Operating free-air temperature, T_A		−55		125	0		70	°C

electrical characteristics over recommended operating free-air temperature range (unless otherwise noted)

PARAMETER		TEST CONDITIONS†		SN54LS173A			SN74LS173A			UNIT
				MIN	TYP‡	MAX	MIN	TYP‡	MAX	
V_{IH}	High-level input voltage			2			2			V
V_{IL}	Low-level input voltage					0.7			0.8	V
V_{IK}	Input clamp voltage	V_{CC} = MIN,	I_I = −18 mA			−1.5			−1.5	V
V_{OH}	High-level output voltage	V_{CC} = MIN, V_{IL} = V_{IL}max	V_{IH} = 2 V, I_{OH} = MAX	2.4	3.4		2.4	3.1		V
V_{OL}	Low-level output voltage	V_{CC} = MIN, V_{IH} = 2 V	I_{OL} = 12 mA		0.25	0.4		0.25	0.4	V
		V_{IL} = 0.8 V	I_{OL} = 24 mA					0.35	0.5	
$I_{O(off)}$	Off-state (high-impedance state) output current	V_{CC} = MAX, V_{IH} = 2 V	V_O = 2.7 V			20			20	μA
			V_O = 0.4 V			−20			−20	
I_I	Input current at maximum input voltage	V_{CC} = MAX,	V_I = 7 V			0.1			0.1	mA
I_{IH}	High-level input current	V_{CC} = MAX,	V_I = 2.7 V			20			20	μA
I_{IL}	Low-level input current	V_{CC} = MAX,	V_I = 0.4 V			−0.4			−0.4	mA
I_{OS}	Short-circuit output current§	V_{CC} = MAX		−30		−130	−30		−130	mA
I_{CC}	Supply current	V_{CC} = MAX,	See Note 2		19	30		19	24	mA

† For conditions shown as MIN or MAX, use the appropriate value specified under recommended operating conditions.
‡ All typical values are at V_{CC} = 5 V, T_A = 25°C.
§ Not more than one output should be shorted at a time.
NOTE 2: I_{CC} is measured with all outputs open; clear grounded following momentary connection to 4.5 V; N, G1, G2, and all data inputs grounded; and the clock input and M at 4.5 V.

switching characteristics, V_{CC} = 5 V, T_A = 25°C, R_L = 667 Ω

PARAMETER		TEST CONDITIONS	MIN	TYP	MAX	UNIT
f_{max}	Maximum clock frequency	C_L = 45 pF, See Note 3	30	50		MHz
t_{PHL}	Propagation delay time, high-to-low-level output from clear input			26	35	ns
t_{PLH}	Propagation delay time, low-to-high-level output from clock input			17	25	ns
t_{PHL}	Propagation delay time, high-to-low-level output from clock input			22	30	
t_{PZH}	Output enable time to high level			15	23	ns
t_{PZL}	Output enable time to low level			18	27	
t_{PHZ}	Output disable time from high level	C_L = 5 pF, See Note 3		11	20	ns
t_{PLZ}	Output disable time from low level			11	17	

NOTE 3: Load circuits and voltage waveforms are shown in Section 1.

'174, 'LS174, 'S174 . . . HEX D-TYPE FLIP-FLOPS
'175, 'LS175, 'S175 . . . QUADRUPLE D-TYPE FLIP-FLOPS

- '174, 'LS174, 'S174 Contain Six Flip-Flops with Single-Rail Outputs
- '175, 'LS175, 'S175 Contain Four Flip-Flops with Double-Rail Outputs
- Three Performance Ranges Offered: See Table Lower Right
- Buffered Clock and Direct Clear Inputs
- Individual Data Input to Each Flip-Flop
- Applications include:
  - Buffer/Storage Registers
  - Shift Registers
  - Pattern Generators

description

These monolithic, positive-edge-triggered flip-flops utilize TTL circuitry to implement D-type flip-flop logic. All have a direct clear input, and the '175, 'LS175, and 'S175 feature complementary outputs from each flip-flop.

Information at the D inputs meeting the setup time requirements is transferred to the Q outputs on the positive-going edge of the clock pulse. Clock triggering occurs at a particular voltage level and is not directly related to the transition time of the positive-going pulse. When the clock input is at either the high or low level, the D input signal has no effect at the output.

These circuits are fully compatible for use with most TTL circuits.

FUNCTION TABLE
(EACH FLIP-FLOP)

INPUTS			OUTPUTS	
CLEAR	CLOCK	D	Q	$\bar{Q}$†
L	X	X	L	H
H	↑	H	H	L
H	↑	L	L	H
H	L	X	Q_0	$\bar{Q}_0$

H = high level (steady state)
L = low level (steady state)
X = irrelevant
↑ = transition from low to high level
Q_0 = the level of Q before the indicated steady-state input conditions were established.
† = '175, 'LS175, and 'S175 only

TYPES	TYPICAL MAXIMUM CLOCK FREQUENCY	TYPICAL POWER DISSIPATION PER FLIP-FLOP
'174, '175	35 MHz	38 mW
'LS174, 'LS175	40 MHz	14 mW
'S174, 'S175	110 MHz	75 mW

SN54174, SN54LS174, SN54S174 . . . J OR W PACKAGE
SN74174 . . . N PACKAGE
SN74LS174, SN74S174 . . . D OR N PACKAGE
(TOP VIEW)

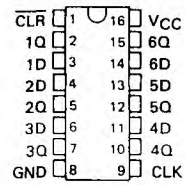

SN54LS174, SN54S174 . . . FK PACKAGE
(TOP VIEW)

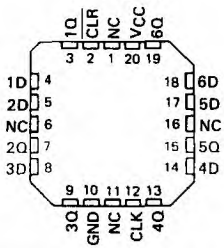

SN54175, SN54LS175, SN54S175 . . . J OR W PACKAGE
SN74175 . . . N PACKAGE
SN74LS175, SN74S175 . . . D OR N PACKAGE
(TOP VIEW)

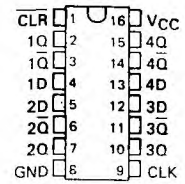

SN54LS175, SN54S175 . . . FK PACKAGE
(TOP VIEW)

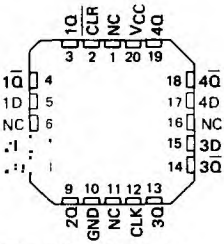

NC – No internal connection

PRODUCT PREVIEW documents contain information on products in the formative or design phase of development. Characteristic data and other specifications are design goals. Texas Instruments reserves the right to change or discontinue these products without notice.

logic symbols†

'174

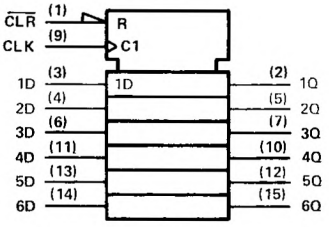

'175

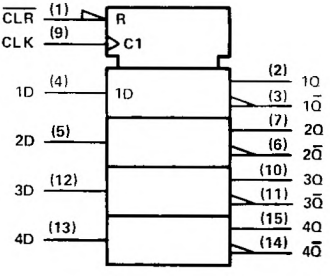

†These symbols are in accordance with ANSI/IEEE Std. 91-1984 and IEC Publication 617-12.
Pin numbers shown are for D, J, N, and W packages.

logic diagrams (positive logic)

'174, 'LS174, 'S174

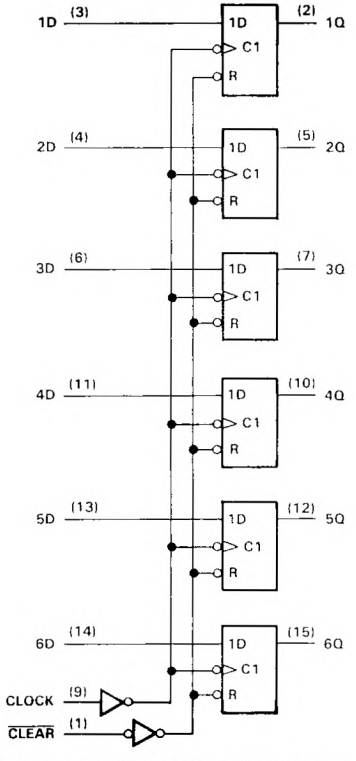

'175, 'LS175, 'S175

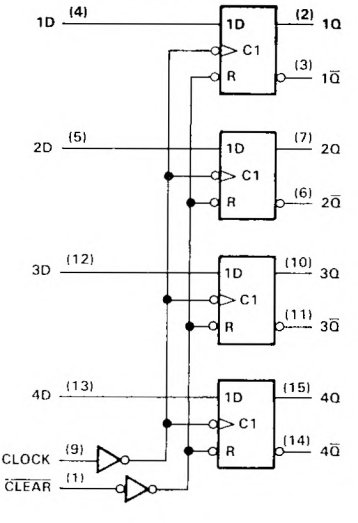

Pin numbers shown are for D, J, N, and W packages.

TEXAS INSTRUMENTS
POST OFFICE BOX 655012 • DALLAS, TEXAS 75265

schematics of inputs and outputs

SN54174, SN54175, SN74174, SN74175

EQUIVALENT OF ALL INPUTS

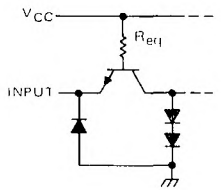

Clock, D: R_{eq} = 8 kΩ NOM
$\overline{\text{Clear}}$: R_{eq} = 4 kΩ NOM

TYPICAL OF ALL OUTPUTS

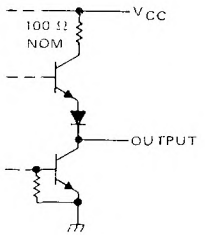

SN54LS174, SN54LS175, SN74LS174, SN74LS175

EQUIVALENT OF ALL INPUTS

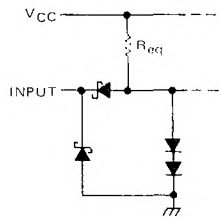

$\overline{\text{Clock}}$: R_{eq} = 23 kΩ NOM
$\overline{\text{Clear}}$, D: R_{eq} = 28 kΩ NOM

TYPICAL OF ALL OUTPUTS

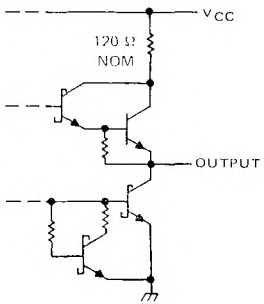

SN54S174, SN54S175, SN74S174, SN74S175

EQUIVALENT OF ALL INPUTS

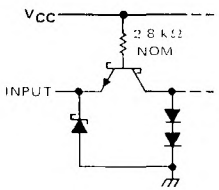

TYPICAL OF ALL OUTPUTS

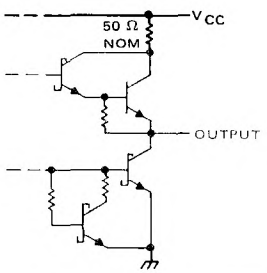

absolute maximum ratings over operating free-air temperature range (unless otherwise noted)

Supply voltage, V_{CC} (see Note 1) . . . . . 7 V
Input voltage . . . . . 5.5 V
Operating free-air temperature range: SN54174, SN54175 Circuits . . . . . −55°C to 125°C
SN74174, SN74175 Circuits . . . . . 0°C to 70°C
Storage temperature range . . . . . −65°C to 150°C

NOTE 1: Voltage values are with respect to network ground terminal.

recommended operating conditions

		SN54174, SN54175			SN74174, SN74175			UNIT
		MIN	NOM	MAX	MIN	NOM	MAX	
Supply voltage, V_{CC}		4.5	5	5.5	4.75	5	5.25	V
High-level output current, I_{OH}				−800				μA
Low-level output current, I_{OL}				16				mA
Clock frequency, f_{clock}		0		25	0		25	MHz
Width of clock or clear pulse, t_w		20			20			ns
Setup time, t_{su}	Data input	20			20			ns
	Clear inactive-state	25			25			ns
Data hold time, t_h		5			5			ns
Operating free-air temperature, T_A		−55		125	0		70	°C

electrical characteristics over recommended operating free-air temperature range (unless otherwise noted)

PARAMETER		TEST CONDITIONS		MIN	TYP‡	MAX	UNIT
V_{IH}	High-level input voltage			2			V
V_{IL}	Low-level input voltage					0.8	V
V_{IK}	Input clamp voltage	V_{CC} = MIN, I_I = −12 mA				−1.5	V
V_{OH}	High-level output voltage	V_{CC} = MIN, V_{IH} = 2 V, V_{IL} = 0.8 V, I_{OH} = −800 μA		2.4	3.4		V
V_{OL}	Low-level output voltage	V_{CC} = MIN, V_{IH} = 2 V, V_{IL} = 0.8 V, I_{OL} = 16 mA			0.2	0.4	V
I_I	Input current at maximum input voltage	V_{CC} = MAX, V_I = 5.5 V				1	mA
I_{IH}	High-level input current	V_{CC} = MAX, V_I = 2.4 V				40	μA
I_{IL}	Low-level input current	V_{CC} = MAX, V_I = 0.4 V				−1.6	mA
I_{OS}	Short-circuit output current§	V_{CC} = MAX	SN54'	−20		−57	mA
			SN74'	−18		−57	
I_{CC}	Supply current	V_{CC} = MAX, See Note 2	'174		45	65	mA
			'175		30	45	

†For conditions shown as MIN or MAX, use the appropriate value specified under recommended operating conditions for the applicable device type.

‡All typical values are at V_{CC} = 5 V, T_A = 25°C.

§Not more than one output should be shorted at a time.

NOTE 2: With all outputs open and 4.5 V applied to all data and clear inputs, I_{CC} is measured after a momentary ground, then 4.5 V, is applied to clock.

switching characteristics, V_{CC} = 5 V, T_A = 25°C

PARAMETER		TEST CONDITIONS	MIN	TYP	MAX	UNIT
f_{max}	Maximum clock frequency	C_L = 15 pF, R_L = 400 Ω, See Note 3	25	35		MHz
t_{PLH}	Propagation delay time, low-to-high-level output from clear (SN54175, SN74175 only)			16	25	ns
t_{PHL}	Propagation delay time, high-to-low-level output from clear			23	35	ns
t_{PLH}	Propagation delay time, low-to-high-level output from clock			20	30	ns
t_{PHL}	Propagation delay time, high-to-low-level output from clock			24	35	ns

NOTE 3: Load circuits and voltage waveforms are shown in Section 1.

TEXAS INSTRUMENTS
POST OFFICE BOX 655012 • DALLAS, TEXAS 75265

absolute maximum ratings over operating free-air temperature range (unless otherwise noted)

Supply voltage, V_{CC} (see Note 1) . . . . . 7 V
Input voltage . . . . . 7 V
Operating free-air temperature range: SN54LS174, SN54LS175 Circuits . . . . . −55°C to 125°C
SN74LS174, SN74LS175 Circuits . . . . . 0°C to 70°C
Storage temperature range . . . . . −65°C to 150°C

NOTE 1: Voltage values are with respect to network ground terminal.

recommended operating conditions

		SN54LS174 SN54LS175			SN74LS174 SN74LS175			UNIT
		MIN	NOM	MAX	MIN	NOM	MAX	
Supply voltage, V_{CC}		4.5	5	5.5	4.75	5	5.25	V
High-level output current, I_{OH}				−400			−400	μA
Low-level output current, I_{OL}				4			8	mA
Clock frequency, f_{clock}		0		30	0		30	MHz
Width of clock or clear pulse, t_w		20			20			ns
Setup time, t_{su}	Data input	20			20			ns
	Clear inactive-state	25			25			ns
Data hold time, t_h		5			5			ns
Operating free-air temperature, T_A		−55		125	0		70	°C

electrical characteristics over recommended operating free-air temperature range (unless otherwise noted)

PARAMETER		TEST CONDITIONS†		SN54LS174 SN54LS175			SN74LS174 SN74LS175			UNIT
				MIN	TYP‡	MAX	MIN	TYP‡	MAX	
V_{IH}	High-level input voltage			2			2			V
V_{IL}	Low-level input voltage					0.7			0.8	V
V_{IK}	Input clamp voltage	V_{CC} = MIN, I_I = −18 mA				−1.5			−1.5	V
V_{OH}	High-level output voltage	V_{CC} = MIN, V_{IH} = 2 V, V_{IL} = V_{IL}max, I_{OH} = −400 μA		2.5	3.5		2.7	3.5		V
V_{OL}	Low-level output voltage	V_{CC} = MIN, V_{IH} = 2 V, V_{IL} = V_{IL} max	I_{OL} = 4 mA		0.25	0.4		0.25	0.4	V
			I_{OL} = 8 mA					0.35	0.5	
I_I	Input current at maximum input voltage	V_{CC} = MAX, V_I = 7 V				0.1			0.1	mA
I_{IH}	High-level input current	V_{CC} = MAX, V_I = 2.7 V				20			20	μA
I_{IL}	Low-level input current	V_{CC} = MAX, V_I = 0.4 V				−0.4			−0.4	mA
I_{OS}	Short-circuit output current§	V_{CC} = MAX		−20		−100	−20		−100	mA
I_{CC}	Supply current	V_{CC} = MAX, See Note 2	'LS174		16	26		16	26	mA
			'LS175		11	18		11	18	

† For conditions shown as MIN or MAX, use the appropriate value specified under recommended operating conditions.
‡ All typical values are at V_{CC} = 5 V, T_A = 25°C.
§ Not more than one output should be shorted at a time, and duration of the short-circuit should not exceed one second.
NOTE 2: With all outputs open and 4.5 V applied to all data and clear inputs, I_{CC} is measured after a momentary ground, then 4.5 V, is applied to clock.

switching characteristics, V_{CC} = 5 V, T_A = 25°C

PARAMETER		TEST CONDITIONS	'LS174			'LS175			UNIT
			MIN	TYP	MAX	MIN	TYP	MAX	
f_{max}	Maximum clock frequency	C_L = 15 pF, R_L = 2 kΩ, See Note 3	30	40		30	40		MHz
t_{PLH}	Propagation delay time, low-to-high [illegible] from clear						20	30	ns
t_{PHL}	Propagation delay time, high-to-low [illegible] from clear			23	35		20	30	ns
t_{PLH}	Propagation delay time, low-to-high-level output from clock			20	30		13	25	ns
t_{PHL}	Propagation delay time, high-to-low-level output from clock			21	30		16	25	ns

NOTE 3: Load circuits and voltage waveforms are shown in Section 1.

absolute maximum ratings over operating free-air temperature range (unless otherwise noted)

Supply voltage, V_{CC} (see Note 1) . . . . . 7 V
Input voltage . . . . . 5.5 V
Operating free-air temperature range: SN54S174, SN54S175 Circuits . . . . . −55°C to 125°C
SN74S174, SN74S175 Circuits . . . . . 0°C to 70°C
Storage temperature range . . . . . −65°C to 150°C

NOTE 1: Voltage values are with respect to network ground terminal.

recommended operating conditions

		SN54S174, SN54S175			SN74S174, SN7[illegible]			UNIT
		MIN	NOM	MAX	MIN	NOM	MAX	
Supply voltage, V_{CC}		4.5	5	5.5	4.75	5	5.25	V
High-level output current, I_{OH}				−1			−1	mA
Low-level output current, I_{OL}				20			20	mA
Clock frequency, f_{clock}		0		75	0		75	MHz
Pulse width, t_w	Clock	7			7			ns
	Clear	10			10			
Setup time, t_{su}	Data input	5			5			ns
	Clear inactive-state	5			5			
Data hold time, t_h		3			3			ns
Operating free-air temperature, T_A		−55		125	0		70	°C

electrical characteristics over recommended operating free-air temperature range (unless otherwise noted)

PARAMETER		TEST CONDITIONS†		MIN	TYP‡	MAX	UNIT
V_{IH}	High-level input voltage			2			V
V_{IL}	Low-level input voltage					0.8	V
V_{IK}	Input clamp voltage	V_{CC} = MIN, I_I = −18 mA				−1.2	V
V_{OH}	High-level output voltage	V_{CC} = MIN, V_{IH} = 2 V, V_{IL} = 0.8 V, I_{OH} = −1 mA	SN54S'	2.5	3.4		V
			SN74S'	2.7	3.4		
V_{OL}	Low-level output voltage	V_{CC} = MIN, V_{IH} = 2 V, V_{IL} = 0.8 V, I_{OL} = 20 mA				0.5	V
I_I	Input current at maximum input voltage	V_{CC} = MAX, V_I = 5.5 V				1	mA
I_{IH}	High-level input current	V_{CC} = MAX, V_I = 2.7 V				50	μA
I_{IL}	Low-level input current	V_{CC} = MAX, V_I = 0.5 V				−2	mA
I_{OS}	Short-circuit output current§	V_{CC} = MAX		−40		−100	mA
I_{CC}	Supply current	V_{CC} = MAX, See Note 2	'174		90	144	mA
			'175		60	96	

†For conditions shown as MIN or MAX, use the appropriate value specified under recommended operating conditions for the applicable device type.
‡All typical values are at V_{CC} = 5 V, T_A = 25°C
§Not more than one output should be shorted at a time, and duration of the short-circuit should not exceed one second.
NOTE 2: With all outputs open and 4.5 V applied to all data and clear inputs, I_{CC} is measured after a momentary ground, then 4.5 V, is applied to clock.

switching characteristics, V_{CC} = 5 V, T_A = 25°C

PARAMETER		TEST CONDITIONS	[illegible]	TYP	[illegible]	UNIT
f_{max}	Maximum clock frequency	C_L = 15 pF, R_L = 280 Ω, See Note 3	[illegible]	110		MHz
t_{PLH}	Propagation delay time, low-to-high-level $\overline{Q}$ output from clear (SN54S175, SN74S175 only)			10	15	ns
t_{PHL}	Propagation delay time, high-to-low-level Q output from clear			13	22	ns
t_{PLH}	Propagation delay time, low-to-high-level output from clock			8	12	ns
t_{PHL}	Propagation time, high-to-low-level output from clock			11.5	17	ns

NOTE 3: Load circuits and voltage waveforms are shown in Section 1.

TEXAS INSTRUMENTS
POST OFFICE BOX 655012 • DALLAS, TEXAS 75265

- **Reduced-Power Versions of SN54196, SN54197, SN74196, and SN74197 50-MHz Counters**
- **D-C Coupled Counters Designed to Replace Signetics 8280, 8281, 8290, and 8291 Counters in Most Applications**
- **Performs BCD, Bi-Quinary, or Binary Counting**
- **Fully Programmable**
- **Fully Independent Clear Input**
- **Counts at Input Frequencies from 0 to 35 MHz**
- **Input Clamping Diodes Simplify System Design**

SN54176, SN54177 . . . J PACKAGE
SN74176, SN74177 . . . N PACKAGE
(TOP VIEW)

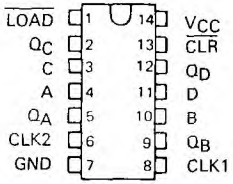

description

These high-speed monolithic counters consist of four d-c coupled master-slave flip-flops which are internally interconnected to provide either a divide-by-two and a divide-by-five counter (SN54176, SN74176) or a divide-by-two and a divide-by-eight counter (SN54177, SN74177). These counters are fully programmable; that is, the outputs may be preset to any state by placing a low on the count/load input and entering the desired data at the data inputs. The outputs will change to agree with the data inputs independent of the state of the clocks.

These counters may also be used as 4-bit latches by using the count/load input as the strobe and entering data at the data inputs. The outputs will directly follow the data inputs when the count/load is low, but will remain unchanged when the count/load is high and the clock inputs are inactive.

These high-speed counters will accept count frequencies of 0 to 35 megahertz at the clock-1 input and 0 to 17.5 megahertz at the clock-2 input. During the count operation, transfer of information to the outputs occurs on the negative-going edge of the clock pulse. The counters feature a direct clear which when taken low sets all outputs low regardless of the states of the clocks.

All inputs are diode-clamped to minimize transmission-line effects and simplify system design. The circuits are compatible with most TTL logic families. Typical power dissipation is 150 milliwatts. The SN54176 and SN54177 circuits are characterized for operation over the full military temperature range of −55°C to 125°C; the SN74176 and SN74177 circuits are characterized for operation from 0°C to 70°C.

logic symbols†

'176

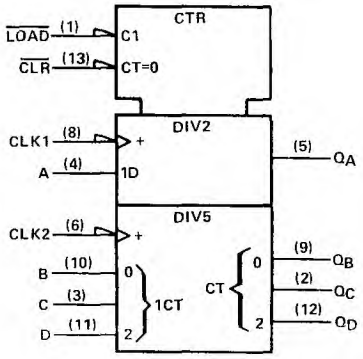

'177

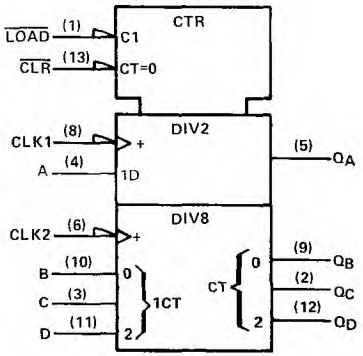

† These symbols are in accordance with ANSI/IEEE Std. 91-1984 and IEC Publication 617-12.

PRODUCTION DATA documents contain information current as of publication date. Products conform to specifications per the terms of Texas Instruments standard warranty. Production processing does not necessarily include testing of all parameters.

typical count configurations

SN54176 and SN74176

The output of flip-flop A is not internally connected to the succeeding flip-flops; therefore, the count may be operated in three independent modes:

1. When used as a binary-coded-decimal decade counter, the clock-2 input must be externally connected to the Q_A output. The clock-1 input receives the incoming count, and a count sequence is obtained in accordance with the BCD count sequence function table shown at right.
2. If a symmetrical divide-by-ten count is desired for frequency synthesizers (or other applications requiring division of a binary count by a power of ten), the Q_D output must be externally connected to the clock-1 input. The input count is then applied at the clock-2 input and a divide-by-ten square wave is obtained at output Q_A in accordance with the bi-quinary function table.

FUNCTION TABLES
SN54176, SN74176

DECADE (BCD)
(See Note A)

COUNT	OUTPUT			
	Q_D	Q_C	Q_B	Q_A
0	L	L	L	L
1	L	L	L	H
2	L	L	H	L
3	L	L	H	H
4	L	H	L	L
5	L	H	L	H
6	L	H	H	L
7	L	H	H	H
8	H	L	L	L
9	H	L	L	H

BI-QUINARY (5-2)
(See Note B)

COUNT	OUTPUT			
	Q_A	Q_D	Q_C	Q_B
0	L	L	L	L
1	L	L	L	H
2	L	L	H	L
3	L	L	H	H
4	L	H	L	L
5	H	L	L	L
6	H	L	L	H
7	H	L	H	L
8	H	L	H	H
9	H	H	L	L

H = high level, L = low level

NOTES: A. Output Q_A connected to clock-2 input.
B. Output Q_D connected to clock-1 input.

3. For operation as a divide-by-two counter and a divide-by-five counter, no external interconnections are required. Flip-flop A is used as a binary element for the divide-by-two function. The clock-2 input is used to obtain binary divide-by-five operation at the Q_B, Q_C, and Q_D outputs. In this mode, the two counters operate independently; however, all four flip-flops are loaded and cleared simultaneously.

SN54177 and SN74177

The output of flip-flop A is not internally connected to the succeeding flip-flops, therefore the counter may be operated in two independent modes:

1. When used as a high-speed 4-bit ripple-through counter, output Q_A must be externally connected to the clock-2 input. The input count pulses are applied to the clock-1 input. Simultaneous divisions by 2, 4, 8, and 16 are performed at the Q_A, Q_B, Q_C, and Q_D outputs as shown in the function table at right.
2. When used as a 3-bit ripple-through counter, the input count pulses are applied to the clock-2 input. Simultaneous frequency divisions by 2, 4, and 8 are available at the Q_B, Q_C, and Q_D outputs. Independent use of flip-flop A is available if the load and clear functions coincide with those of the 3-bit ripple-through counter.

FUNCTION TABLE
SN54177, SN74177
(See Note A)

COUNT	OUTPUT			
	Q_D	Q_C	Q_B	Q_A
0	L	L	L	L
1	L	L	L	H
2	L	L	H	L
3	L	L	H	H
4	L	H	L	L
5	L	H	L	H
6	L	H	H	L
7	L	H	H	H
8	H	L	L	L
9	H	L	L	H
10	H	L	H	L
11	H	L	H	H
12	H	H	L	L
13	H	H	L	H
14	H	H	H	L
15	H	H	H	H

H = high level, L = low level

NOTE A: Output Q_A connected to clock-2 input.

TEXAS INSTRUMENTS
POST OFFICE BOX 655012 • DALLAS, TEXAS 75265

logic diagrams (positive logic)

SN54177, SN74177

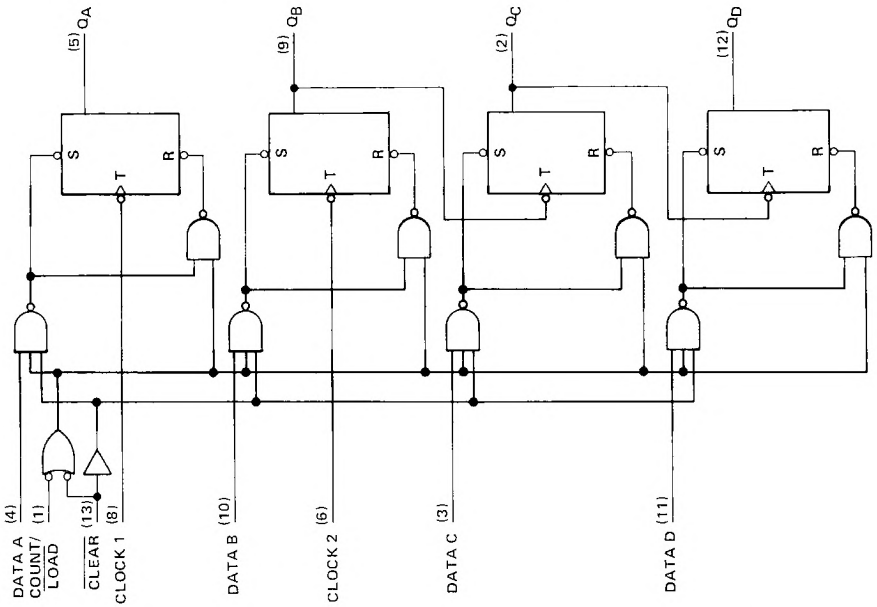

SN54176, SN74176

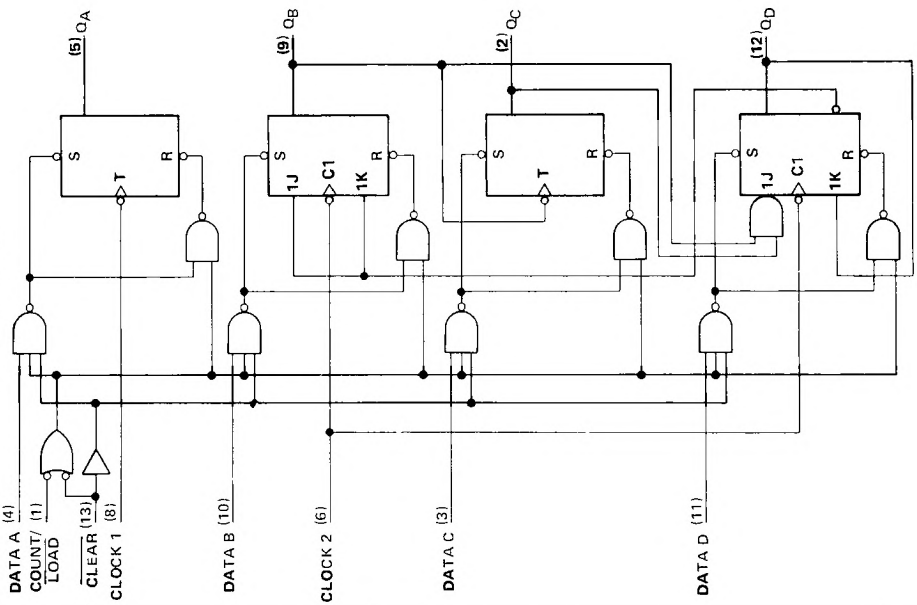

schematics of inputs and outputs

EQUIVALENT OF COUNT/$\overline{\text{LOAD}}$, $\overline{\text{CLEAR}}$, AND DATA INPUTS

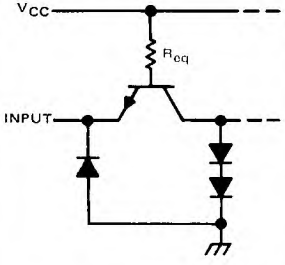

Data, Count/$\overline{\text{load}}$: R_{eq} = 4 kΩ NOM
$\overline{\text{Clear}}$: R_{eq} = 2 kΩ NOM

EQUIVALENT OF CLOCK INPUTS

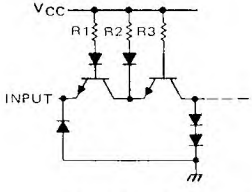

NOMINAL VALUES OF R1, R2, and R3

INPUT	'176	'177
Clock 1	4 kΩ	4 kΩ
Clock 2	4 kΩ	6 kΩ

TYPICAL OF ALL OUTPUTS

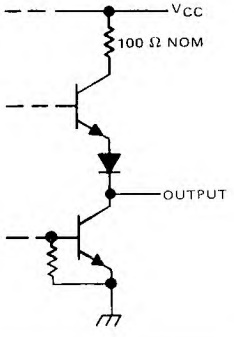

absolute maximum ratings over operating free-air temperature range (unless otherwise noted)

Supply voltage, V_{CC} (see Note 1)		7 V
Input voltage		5.5 V
Interemitter voltage (see Note 2)		5.5 V
Operating free-air temperature range:	SN54176, SN54177 Circuits	−55°C to 125°C
	SN74176, SN74177 Circuits	0°C to 70°C
Storage temperature range		−65°C to 150°C

NOTES: 1. Voltage values are with respect to network ground terminal.
2. This is the voltage between two emitters of a multiple-emitter transistor. For this circuit, this rating applies between the clear and count/load inputs.

recommended operating conditions

		MIN	NOM	MAX	UNIT
Supply voltage, V_{CC}	SN54'	4.5	5	5.5	V
	SN74'	4.75	5	5.25	
High-level output current, I_{OH}				−800	μA
Low-level output current, I_{OL}				16	mA
Count frequency (see Figure 1)	Clock-1 input	0		35	MHz
	Clock-2 input	0		17.5	
Pulse width, t_w (see Figure 1)	Clock-1 input	14			ns
	Clock-2 input	28			
	$\overline{\text{Clear}}$	20			
	Load	25			
Input hold time, t_h (see Figure 1)	High-level data	$t_{w(load)}$			ns
	Low-level data	$t_{w(load)}$			
Input setup time, t_{su} (see Figure 1)	High-level data	15			ns
	Low-level data	20			
Count enable time, t_{enable} (see Note 3 and Figure 1)		25			ns
Operating free-air temperature, T_A	∴ ∴	−55		125	°C
	∴ ∴	0		70	

NOTE 3: Minimum count enable time is the interval immediately preceding the negative-going edge of the clock pulse during which interval the count/load and clear inputs must both be high to ensure counting.

TEXAS INSTRUMENTS
POST OFFICE BOX 655012 • DALLAS, TEXAS 75265

electrical characteristics over recommended operating free-air temperature range (unless otherwise noted)

PARAMETER			TEST CONDITIONS†		SN54176, SN74176			SN54177, SN74177			UNIT
					MIN	TYP‡	MAX	MIN	TYP‡	MAX	
V_{IH}	High-level input voltage				2			2			V
V_{IL}	Low-level input voltage						0.8			0.8	V
V_{IK}	Input clamp voltage		V_{CC} = MIN, I_I = −12 mA				−1.5			−1.5	V
V_{OH}	High-level output voltage		V_{CC} = MIN, V_{IH} = 2 V, V_{IL} = 0.8 V, I_{OH} = −800 μA		2.4	3.4		2.4	3.4		V
V_{OL}	Low-level output voltage		V_{CC} = MIN, V_{IH} = 2 V, V_{IL} = 0.8 V, I_{OL} = 16 mA¶			0.2	0.4		0.2	0.4	V
I_I	Input current at maximum input voltage		V_{CC} = MAX, V_I = 5.5 V				1			1	mA
I_{IH}	High-level input curren	count/load	V_{CC} = MAX, V_I = 2.4 V				40			40	μA
		clock 1					80			80	
		clock 2					120			80	
I_{IL}	Low-level input current	Data, count/load	V_{CC} = MAX, V_I = 0.4 V				−1.6			−1.6	mA
		Clear					−3.2			−3.2	
		Clock 1					−4.8			−4.8	
		Clock 2					−4.8			−3.2	
I_{OS}	Short-circuit output current§		V_{CC} = MAX	SN54'	−20		−57	−20		−57	mA
				SN74'	−18		−57	−18		−57	
I_{CC}	Supply current		V_{CC} = MAX, See Note 4			30	48		30	48	mA

† For conditions shown as MIN or MAX, use the appropriate value specified under recommended operating conditions.
‡ All typical values are at V_{CC} = 5 V, T_A = 25°C.
§ Not more than one output should be shorted at a time.
¶ Q_A outputs are tested at I_{OL} = 16 mA plus the limit value of I_{IL} for the clock-2 input. This permits driving the clock-2 input while fanning out to 10 Series 54/74 loads.
NOTE 4: I_{CC} is measured with all inputs grounded and all outputs open.

switching characteristics, V_{CC} = 5 V, R_L = 400 Ω, C_L = 15 pF, T_A = 25°C, see figure 1

PARAMETER#	FROM (INPUT)	TO (OUTPUT)	SN54176, SN74176			SN54177, SN54177			UNIT
			MIN	TYP	MAX	MIN	TYP	MAX	
f_{max}	Clock 1	Q_A	35	50		35	50		MHz
t_{PLH}	Clock 1	Q_A		8	13		8	13	ns
t_{PHL}				11	17		11	17	
t_{PLH}	Clock 2	Q_B		11	17		11	17	ns
t_{PHL}				17	26		17	26	
t_{PLH}	Clock 2	Q_C		27	41		27	41	ns
t_{PHL}				34	51		34	51	
t_{PLH}	Clock 2	Q_D		13	20		44	66	ns
t_{PHL}				17	26		50	75	
t_{PLH}	A, B, C, D	Q_A, Q_B, Q_C, Q_D		19	29		19	29	ns
t_{PHL}				31	46		31	46	
t_{PLH}	Load	Any		29	43		29	43	ns
t_{PHL}				32	48		32	48	
t_{PHL}	‾	Any		32	48		32	48	ns

f_{max} = maximum count frequency.
t_{PLH} = propagation delay time, low-to-high-level output.
t_{PHL} = propagation delay time, high-to-low-level output.

PARAMETER MEASUREMENT INFORMATION

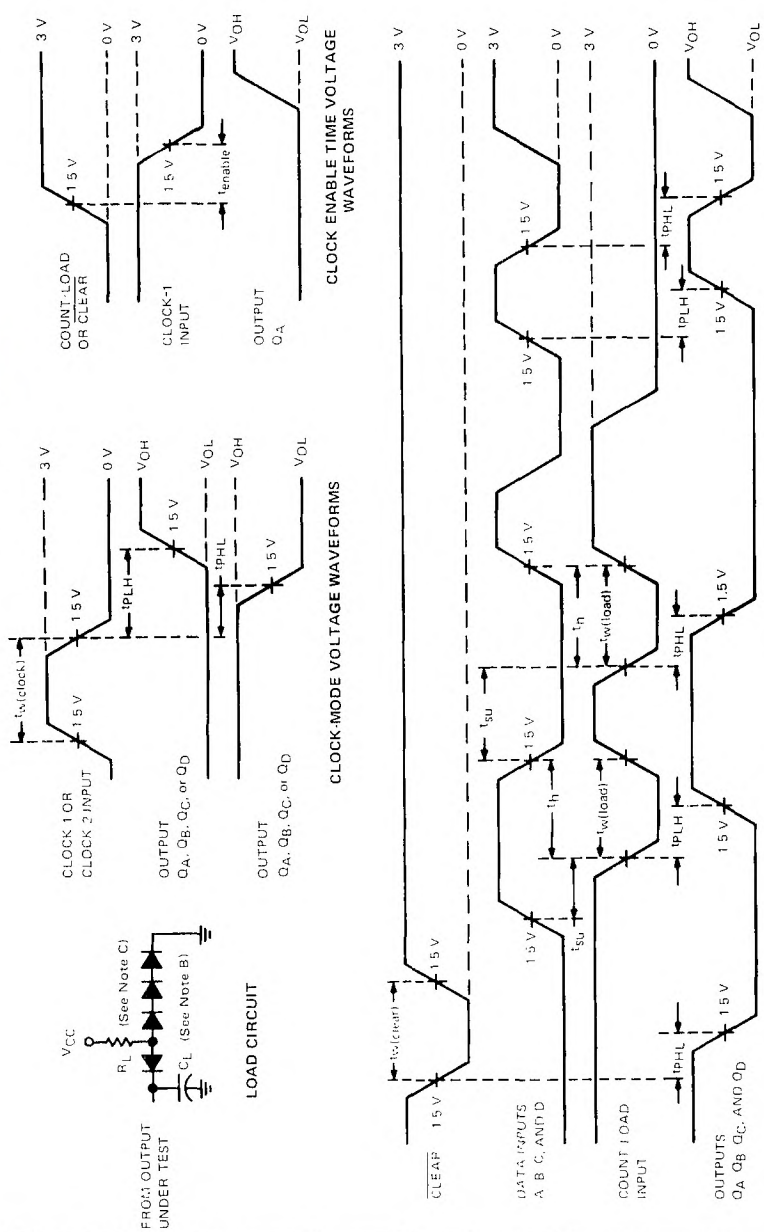

FIGURE 1

NOTES A. The input pulse is supplied by a generator having the following characteristics: PRR ≤ 1 MHz, duty cycle ≤ 50%, t_r ≤ 5 ns, and unless specified, t_f ≤ 5 ns. When testing f_{max}, vary PRR.
B. C_L includes probe and jig capacitance.
C. All diodes are 1N3064 or equivalent.
D. Unless otherwise specified, Q_A is connected to clock 2.

TEXAS INSTRUMENTS
POST OFFICE BOX 655012 • DALLAS, TEXAS 75265

DECEMBER 1972—REVISED MARCH 1988

- Typical Maximum Clock Frequency . . . 39 MHz
- Three Operating Modes:
  - Synchronous Parallel Load
  - Right Shift
  - Hold (Do Nothing)
- Negative-Edge-Triggered Clocking
- D-C Coupling Symplifies System Designs

SN54178 . . . J OR W PACKAGE
(TOP VIEW)

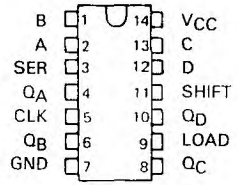

description

These shift registers utilize fully d-c coupled storage elements and feature synchronous parallel inputs and parallel outputs.

Parallel loading is accomplished by taking the shift input low, applying the four bits of data, and taking the load input high. The data is loaded into the associated flip-flop synchronously and appears at the outputs after a high-to-low transition of the clock. During loading, serial data flow is inhibited.

Shift right is also accomplished on the falling edge of the clock pulse when the shift input is high regardless of the level of the load input. Serial data for this mode is entered at the serial data input.

When both the shift and load inputs are low, clocking of the register can continue; however, data appearing at each output is fed back to the flip-flop input creating a mode in which the data is held unchanged. Thus, the system clock may be left free-running without changing the contents of the register.

logic symbol†

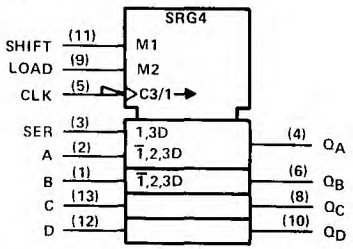

†This symbol is in accordance with ANSI/IEEE Std 91-1984 and IEC Publication 617.12.

FUNCTION TABLE

INPUTS								OUTPUTS			
SHIFT	LOAD	CLOCK	SERIAL	PARALLEL A	PARALLEL B	PARALLEL C	PARALLEL D	Q_A	Q_B	Q_C	Q_D
X	X	H	X	X	X	X	X	Q_{A0}	Q_{B0}	Q_{C0}	Q_{D0}
L	L	↓	X	X	X	X	X	Q_{A0}	Q_{B0}	Q_{C0}	Q_{D0}
L	H	↓	X	a	b	c	d	a	b	c	d
H	X	↓	H	X	X	X	X	H	Q_{An}	Q_{Bn}	Q_{Cn}
H	X	↓	L	X	X	X	X	L	Q_{An}	Q_{Bn}	Q_{Cn}

H = high level (steady state), L = low level (steady state)
X = irrelevant (any input, including transitions)
↓ = transition from high to low level
a, b, c, d = the level of steady state input at inputs A, B, C, or D, respectively
Q_{A0}, Q_{B0}, Q_{C0}, Q_{D0} = the level of Q_A, Q_B, Q_C, or $\overline{Q}_D$, respectively, before the indicated steady-state input conditions were established.
Q_{An}, Q_{Bn}, Q_{Cn} = the level of Q_A, Q_B, or Q_C, respectively, before the most-recent ↓ transition of the clock.

PRODUCTION DATA documents contain information current as of publication date. Products conform to specifications per the terms of Texas Instruments standard warranty. Production processing does not necessarily include testing of all parameters.

logic diagram (positive logic)

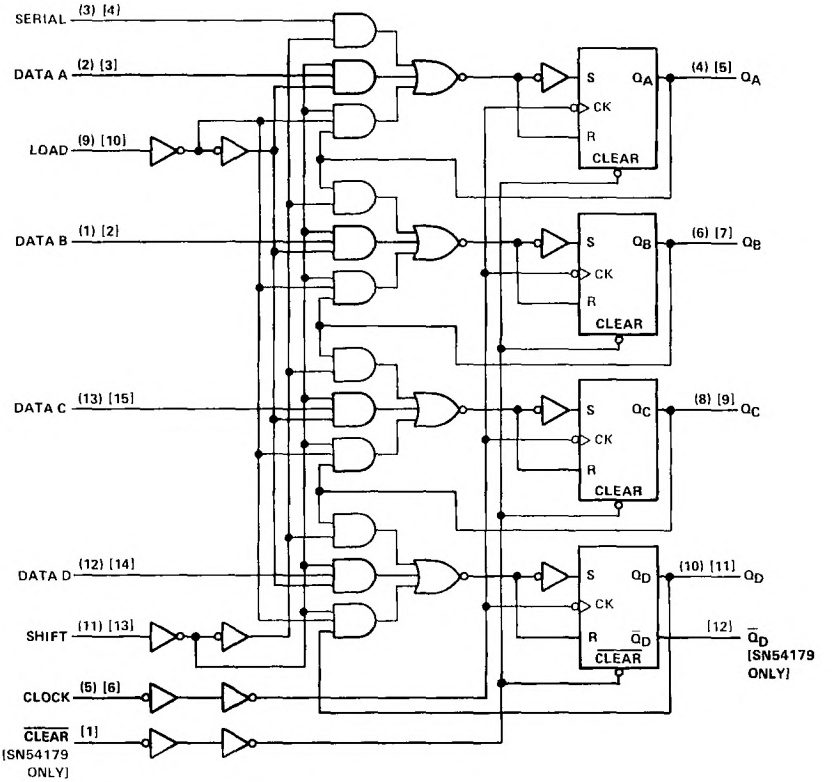

schematics of inputs and outputs

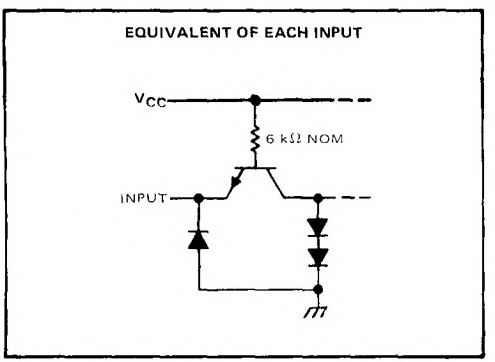

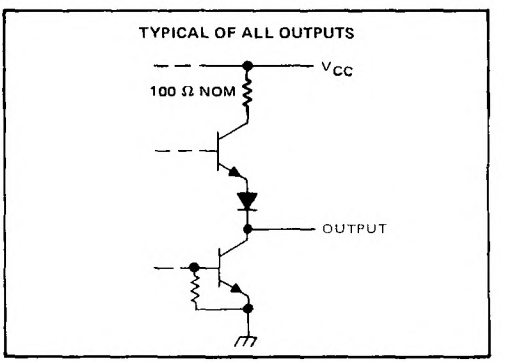

TEXAS INSTRUMENTS
POST OFFICE BOX 655012 • DALLAS, TEXAS 75265

absolute maximum ratings over operating free-air temperature range (unless otherwise noted)

Supply voltage, V_{CC} (see Note 1) . . . . . 7 V
Input voltage . . . . . 5.5 V
Operating free-air temperature range: SN54178 . . . . . −55°C to 125°C
SN74178 . . . . . 0°C to 70°C
Storage temperature range . . . . . −65°C to 150°C

NOTE 1: Voltage values are with respect to network ground terminal.

recommended operating conditions

		SN54178			SN74178			UNIT
		MIN	NOM	MAX	MIN	NOM	MAX	
Supply voltage, V_{CC}		4.5	5	5.5	4.75	5	5.25	V
High-level output current, I_{OH}				−800			−800	μA
Low-level output current, I_{OL}				16			16	mA
Clock frequency, f_{clock}		0		25	0		25	MHz
Width of clock or clear pulse, t_w (see Figure 1)		20			20			ns
Setup time t_{su} (see Figure 1)	Shift (H or L) or load	35			35			ns
	Data	30			30			
Hold time at any input, t_h		5			5			ns
Operating free-air temperature, T_A		−55		125	0		70	°C

electrical characteristics over recommended operating free-air temperature range (unless otherwise noted)

PARAMETER		TEST CONDITIONS†	SN54178			SN74178			UNIT
			MIN	TYP‡	MAX	MIN	TYP‡	MAX	
V_{IH}	High-level input voltage		2			2			V
V_{IL}	Low-level input voltage				0.8			0.8	V
V_{IK}	Input clamp voltage	V_{CC} = MIN, I_I = −12 mA			−1.5			−1.5	V
V_{OH}	High-level output voltage	V_{CC} = MIN, V_{IH} = 2 V, V_{IL} = 0.8 V, I_{OH} = −800 μA	2.4	3.4		2.4	3.4		V
V_{OL}	Low-level output voltage	V_{CC} = MIN, V_{IH} = 2 V, V_{IL} = 0.8 V, I_{OL} = 16 mA		0.2	0.4		0.2	0.4	V
I_I	Input current at maximum input voltage	V_{CC} = MAX, V_I = 5.5 V			1			1	mA
I_{IH}	High-level input current	V_{CC} = MAX, V_I = 2.4 V			40			40	μA
I_{IL}	Low-level input current	V_{CC} = MAX, V_I = 0.4 V			−1.6			−1.6	mA
I_{OS}	Short-circuit output current§	V_{CC} = MAX	−20		−57	−18		−57	mA
I_{CC}	Supply current	V_{CC} = MAX, See Note 2		46	70		46	75	mA

† For conditions shown as MIN or MAX, use the appropriate value specified under recommended operating conditions for the applicable device type.
‡ All typical values are at V_{CC} = 5 V, T_A = 25°C.
§ Not more than one output should be shorted at a time.
NOTE 2: I_{CC} is measured as follows:
a) 4.5 V is applied to serial inputs, load, shift, and $\overline{clear}$.
b) Parallel inputs A through D are grounded.
c) 4.5 V is momentarily applied to clock which is then grounded.

switching characteristics, V_{CC} = 5 V, T_A = 25°C

PARAMETER†	FROM (INPUT)	TO (OUTPUT)	TEST CONDITIONS	MIN	TYP	MAX	UNIT
f_{max}			C_L = 15 pF, R_L = 400 Ω, See Figure 1	25	39		MHz
t_{PLH}	$\overline{Clear}$	$\overline{Q}_D$			15	23	ns
t_{PHL}		Q_A, Q_B, Q_C, Q_D			24	36	
t_{PLH}	Clock	Any output			17	26	ns
t_{PHL}					23	35	

†f_{max} = Maximum clock frequency
t_{PHL} = Propagation delay time, high-to-low-level output
t_{PLH} = Propagation delay time, low-to-high-level output

PARAMETER MEASUREMENT INFORMATION

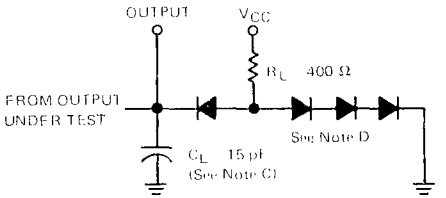

LOAD CIRCUIT

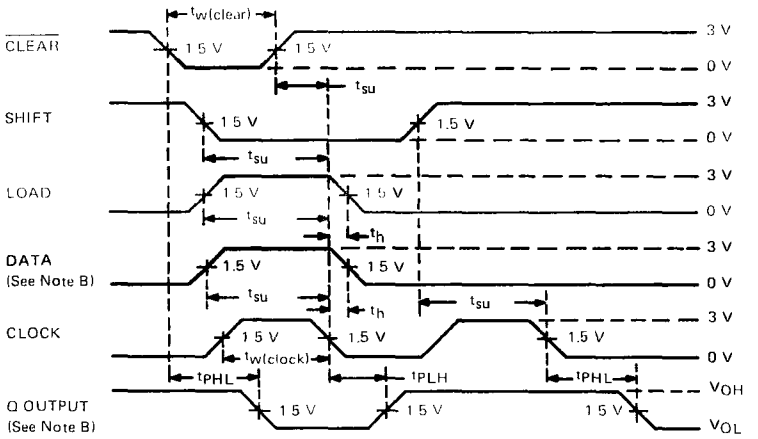

VOLTAGE WAVEFORMS

NOTES: A. Input pulses are supplied by generators having the following characteristics. $t_{TLH} \approx 10$ ns, $t_{THL} \approx 10$ ns, PRR ≤ 1 MHz, $Z_{out} \approx 50$ Ω.
B. Data input and Q output are any related pair. Serial and other data inputs are at GND. Serial data input is tested in conjunction with Q_A output in the shift mode.
C. C_L includes probe and jig capacitance.
D. All diodes are 1N3064 or equivalent.

FIGURE 1–SWITCHING TIMES

TEXAS INSTRUMENTS
POST OFFICE BOX 655012 • DALLAS, TEXAS 75265

DECEMBER 1972 – REVISED MARCH 1988

FUNCTION TABLE

INPUTS			OUTPUTS	
Σ OF H's AT A THRU H	EVEN	ODD	Σ EVEN	Σ ODD
EVEN	H	L	H	L
ODD	H	L	L	H
EVEN	L	H	L	H
ODD	L	H	H	L
X	H	H	L	L
X	L	L	H	H

H = high level, L = low level, X = irrelevant

SN54180 . . . J OR W PACKAGE
SN74180 . . . N PACKAGE
(TOP VIEW)

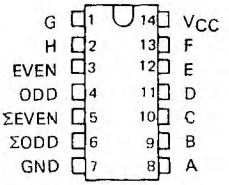

description

These universal, monolithic, 9-bit (8 data bits plus 1 parity bit) parity generators/checkers, utilize familiar Series 54/74 TTL circuitry and feature odd/even outputs and control inputs to facilitate operation in either odd or even-parity applications. Depending on whether even or odd parity is being generated or checked, the even or odd inputs can be utilized as the parity or 9th-bit input. The word-length capability is easily expanded by cascading.

The SN54180/SN74180 are fully compatible with other TTL or DTL circuits. Input buffers are provided so that each data input represents only one normalized series 54/74 load. A full fan-out to 10 normalized series 54/74 loads is available from each of the outputs at a low logic level. A fan-out to 20 normalized loads is provided at a high logic level to facilitate the connection of unused inputs to used inputs. Typical power dissipation is 170 mW.

The SN54180 is characterized for operation over the full military temperature range of −55°C to 125°C; and the SN74180 is characterized for operation from 0°C to 70°C.

absolute maximum ratings over operating free-air temperature range (unless otherwise noted)

Supply voltage, V_{CC} (see Note 1) . . . . . 7 V
Input voltage . . . . . 5.5 V
Operating free-air temperature range: SN54180 Circuits . . . . . −55°C to 125°C
SN74180 Circuits . . . . . 0°C to 70°C
Storage temperature range . . . . . −65°C to 150°C

NOTE 1: Voltage values are with respect to network ground terminal.

recommended operating conditions

	SN54180			SN74180			UNIT
	MIN	NOM	MAX	MIN	NOM	MAX	
Supply voltage, V_{CC}	4.5	5	5.5	4.75	5	5.25	V
High-level output current, I_{OH}			−800			−800	μA
Low-level output current, I_{OL}			16			16	mA
Operating free-air temperature, T_A	−55		125	0		70	°C

PRODUCTION DATA documents contain information current as of publication date. Products conform to specifications per the terms of Texas Instruments standard warranty. Production processing does not necessarily include testing of all parameters.

electrical characteristics over recommended operating free-air temperature range (unless otherwise noted)

PARAMETER			TEST CONDITIONS†	SN54180			SN74180			UNIT
				MIN	TYP‡	MAX	MIN	TYP‡	MAX	
V_{IH}	High-level input voltage			2			2			V
V_{IL}	Low-level input voltage					0.8			0.8	V
V_{IK}	Input clamp voltage		V_{CC} = MIN, I_I = −12 mA			−1.5			−1.5	V
V_{OH}	High-level output voltage		V_{CC} = MIN, V_{IH} = 2 V, V_{IL} = 0.8 V, I_{OH} = −800 μA	2.4	3.3		2.4	3.3		V
V_{OL}	Low-level output voltage		V_{CC} = MIN, V_{IH} = 2 V, V_{IL} = 0.8 V, I_{OL} = 16 mA		0.2	0.4		0.2	0.4	V
I_I	Input current at maximum input voltage		V_{CC} = MAX, V_I = 5.5 V			1			1	mA
I_{IH}	High-level input current	Any data input	V_{CC} = MAX, V_I = 2.4 V			40			40	μA
		Even or odd input				80			80	
I_{IL}	Low-level input current	Any data input	V_{CC} = MAX, V_I = 0.4 V			−1.6			−1.6	mA
		Even or odd input				−3.2			−3.2	
I_{OS}	Short-circuit output current§		V_{CC} = MAX	−20		−55	−18		−55	mA
I_{CC}	Supply current		V_{CC} = MAX, See Note 2		34	49		34	56	mA

NOTE 2: I_{CC} is measured with even and odd inputs at 4.5 V, all other inputs and outputs open.
†For conditions shown as MIN or MAX, use the appropriate value specified under recommended operating conditions for the applicable type.
‡All typical values are at V_{CC} = 5 V, T_A = 25°C.
§Not more than one output should be shorted at a time.

switching characteristics, V_{CC} = 5 V, T_A = 25°C

PARAMETER¶	FROM (INPUT)	TO (OUTPUT)	TEST CONDITIONS	MIN	TYP	MAX	UNIT
t_{PLH}	Data	Σ Even	C_L = 15 pF, R_L = 400 Ω, Odd input grounded, See Note 3		40	60	ns
t_{PHL}					45	68	
t_{PLH}	Data	Σ Odd			32	48	ns
t_{PHL}					25	38	
t_{PLH}	Data	Σ Even	C_L = 15 pF, R_L = 400 Ω, Even input grounded, See Note 3		32	48	ns
t_{PHL}					25	38	
t_{PLH}	Data	Σ Odd			40	60	ns
t_{PHL}					45	68	
t_{PLH}	Even or Odd	Σ Even or Σ Odd	C_L = 15 pF, R_L = 400 Ω, See Note 3		13	20	ns
t_{PHL}					7	10	

NOTE 3: Load circuits and voltage waveforms are shown in Section 1.

logic symbol†

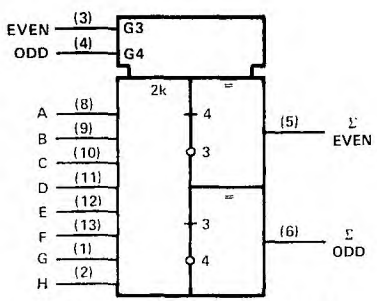

†This symbol is in accordance with ANSI/IEEE Std 91-1984 and IEC Publication 617-12.

TEXAS INSTRUMENTS
POST OFFICE BOX 655012 • DALLAS, TEXAS 75265

schematics of inputs and outputs

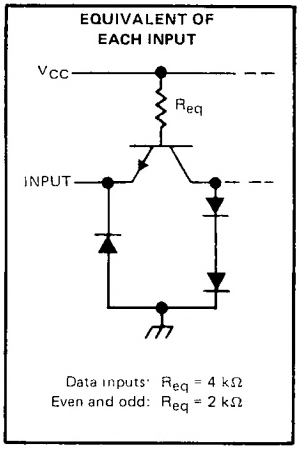

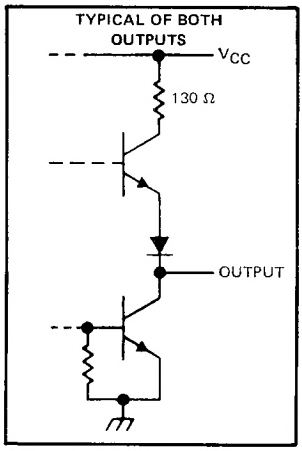

logic diagram (positive logic)

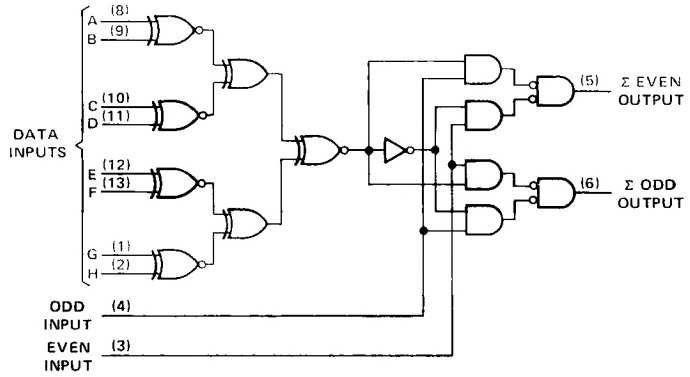

- Full Look-Ahead for High-Speed Operations on Long Words
- Input Clamping Diodes Minimize Transmission-Line Effects
- Darlington Outputs Reduce Turn-Off Time
- Arithmetic Operating Modes:
  - Addition
  - Subtraction
  - Shift Operand A One Position
  - Magnitude Comparison
  - Plus Twelve Other Arithmetic Operations
- Logic Function Modes:
  - Exclusive-OR
  - Comparator
  - AND, NAND, OR, NOR
  - Plus Ten Other Logic Operations

SN54LS181, SN54S181 . . . J OR W PACKAGE
SN74LS181, SN74S181 . . . DW OR N PACKAGE
(TOP VIEW)

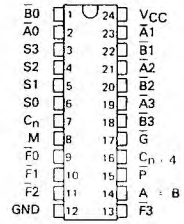

SN54LS181, SN54S181 . . . FK PACKAGE
(TOP VIEW)

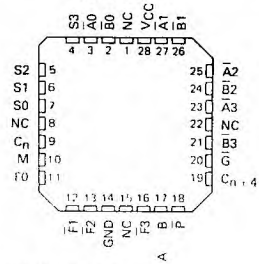

NC – No internal connection

TYPICAL ADDITION TIMES

NUMBER OF BITS	ADDITION TIMES USING 'LS181 AND 'S182	ADDITION TIMES USING 'S181 AND 'S182	PACKAGE COUNT ARITHMETIC/ LOGIC UNITS	PACKAGE COUNT LOOK-AHEAD CARRY GENERATORS	CARRY METHOD BETWEEN ALUs
1 to 4	24 ns	11 ns	1		NONE
5 to 8	40 ns	18 ns	2		RIPPLE
9 to 16	44 ns	19 ns	3 or 4	1	FULL LOOK-AHEAD
17 to 64	68 ns	28 ns	5 to 16	2 to 5	FULL LOOK-AHEAD

description

The 'LS181 and 'S181 are arithmetic logic units (ALU)/function generators that have a complexity of 75 equivalent gates on a monolithic chip. These circuits perform 16 binary arithmetic operations on two 4-bit words as shown in Tables 1 and 2. These operations are selected by the four function-select lines (S0, S1, S2, S3) and include addition, subtraction, decrement, and straight transfer. When performing arithmetic manipulations, the internal carries must be enabled by applying a low-level voltage to the mode control input (M). A full carry look-ahead scheme is made available in these devices for fast, simultaneous carry generation by means of two cascade-outputs (pins 15 and 17) for the four bits in the package. When used in conjunction with the SN54S182 or SN74S182 full carry look-ahead circuits, high-speed arithmetic operations can be performed. The typical addition times shown above illustrate the little additional time required for addition of longer words when full carry look-ahead is employed. The method of cascading 'S182 circuits with these ALUs to provide multi-level full carry look-ahead is illustrated under typical applications data for the 'S182.

If high speed is not of importance, a ripple-carry input (C_n) and a ripple-carry output (C_{n+4}) are available. However, the ripple-carry delay has also been minimized so that arithmetic manipulations for small word lengths can be performed without external circuitry.

PRODUCTION DATA documents contain information current as of publication date. Products conform to specifications per the terms of Texas Instruments standard warranty. Production processing does not necessarily include testing of all parameters.

description (continued)

The 'LS181 and 'S181 will accommodate active-high data if the pin designations are interpreted as follows:

PIN NUMBER	2	1	23	22	21	20	19	18	9	10	11	13	7	16	15	17
Active-low data (Table 1)	$\overline{A}_0$	$\overline{B}_0$	$\overline{A}_1$	$\overline{B}_1$	$\overline{A}_2$	$\overline{B}_2$	$\overline{A}_3$	$\overline{B}_3$	$\overline{F}_0$	$\overline{F}_1$	$\overline{F}_2$	$\overline{F}_3$	C_n	C_{n+4}	$\overline{P}$	$\overline{G}$
Active-high data (Table 2)	A_0	B_0	A_1	B_1	A_2	B_2	A_3	B_3	F_0	F_1	F_2	F_3	$\overline{C}_n$	$\overline{C}_{n+4}$	X	Y

Subtraction is accomplished by 1's complement addition where the 1's complement of the subtrahend is generated internally. The resultant output is A−B−1, which requires an end-around or forced carry to provide A−B.

The 'LS181 or 'S181 can also be utilized as a comparator. The A = B output is internally decoded from the function outputs (F0, F1, F2, F3) so that when two words of equal magnitude are applied at the A and B inputs, it will assume a high level to indicate equality (A = B). The ALU must be in the subtract mode with C_n = H when performing this comparison. The A = B output is open-collector so that it can be wire-AND connected to give a comparison for more than four bits. The carry output (C_{n+4}) can also be used to supply relative magnitude information. Again, the ALU must be placed in the subtract mode by placing the function select inputs S3, S2, S1, S0 at L, H, H, L, respectively.

INPUT C_n	OUTPUT C_{n+4}	ACTIVE-LOW DATA (FIGURE 1)	ACTIVE-HIGH DATA (FIGURE 2)
H	H	A ≥ B	A ≤ B
H	L	A < B	A > B
L	H	A = B	A < B
L	L	A ≤ B	A ≥ B

These circuits have been designed to not only incorporate all of the designer's requirements for arithmetic operations, but also to provide 16 possible functions of two Boolean variables without the use of external circuitry. These logic functions are selected by use of the four function-select inputs (S0, S1, S2, S3) with the mode-control input (M) at a high level to disable the internal carry. The 16 logic functions are detailed in Tables 1 and 2 and include exclusive-OR, NAND, AND, NOR, and OR functions.

Series 54, 54LS, and 54S devices are characterized for operation over the full military temperature range of −55°C to 125°C; Series 74LS and 74S devices are characterized for operation from 0°C to 70°C.

signal designations

In both Figures 1 and 2, the polarity indicators (▷) indicate that the associated input or output is active-low with respect to the function shown inside the symbol, and the symbols are the same in both figures. The signal designations in Figure 1 agree with the indicated internal functions based on active-low data, and are for use with the logic functions and arithmetic operations shown in Table 1. The signal designations have been changed in Figure 2 to accommodate the logic functions and arithmetic operations for the active-high data given in Table 2. The 'LS181 and 'S181, together with the 'S182, can be used with the signal designation of either Figure 1 or Figure 2.

TEXAS INSTRUMENTS
POST OFFICE BOX 655012 • DALLAS, TEXAS 75265

logic symbols† and signal designations (active-low data)

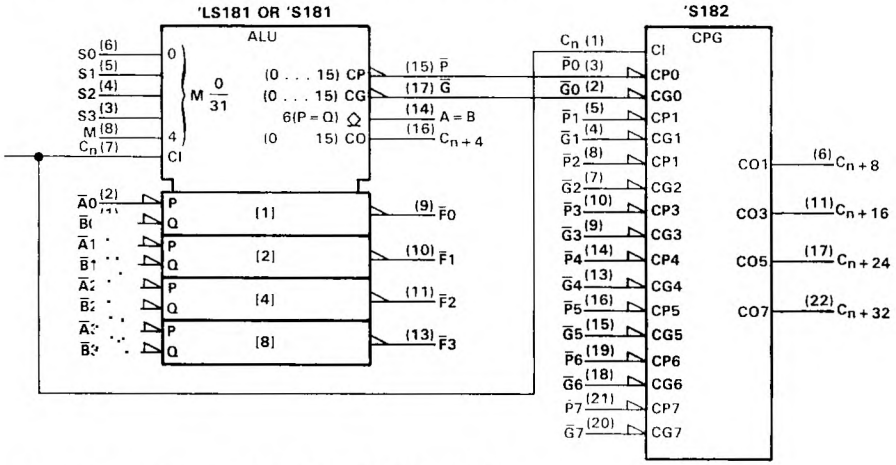

†These symbols are in accordance with ANSI/IEEE Std. 91-1984 and IEC Publication 617-12.
Pin numbers shown are for dual-in-line and "small outline" packages.

FIGURE 1 (USE WITH TABLE 1)

TABLE 1

SELECTION				ACTIVE-LOW DATA		
				M = H	M = L; ARITHMETIC OPERATIONS‡	
S3	S2	S1	S0	LOGIC FUNCTIONS	Cn = L (no carry)	Cn = H (with carry)
L	L	L	L	F = $\overline{A}$	F = A MINUS 1	F = A
L	L	L	H	F = $\overline{AB}$	F = AB MINUS 1	F = AB
L	L	H	L	F = $\overline{A}$ + B	F = A$\overline{B}$ MINUS 1	F = A$\overline{B}$
L	L	H	H	F = 1	F = MINUS 1 (2's COMP)	F = ZERO
L	H	L	L	F = $\overline{A + B}$	F = A PLUS (A + $\overline{B}$)	F = A PLUS (A + $\overline{B}$) PLUS 1
L	H	L	H	F = $\overline{B}$	F = AB PLUS (A + $\overline{B}$)	F = AB PLUS (A + $\overline{B}$) PLUS 1
L	H	H	L	F = A ⊕ B	F = A MINUS B MINUS 1	F = A MINUS B
L	H	H	H	F = A + $\overline{B}$	F = A + $\overline{B}$	F = (A + $\overline{B}$) PLUS 1
H	L	L	L	F = $\overline{A}$B	F = A PLUS (A + B)	F = A PLUS (A + B) PLUS 1
H	L	L	H	F = A ⊕ B	F = A PLUS B	F = A PLUS B PLUS 1
H	L	H	L	F = B	F = A$\overline{B}$ PLUS (A + B)	F = A$\overline{B}$ PLUS (A + B) PLUS 1
H	L	H	H	F = A + B	F = (A + B)	F = (A + B) PLUS 1
H	H	L	L	F = 0	F = A PLUS A*	F = A PLUS A PLUS 1
H	H	L	H	F = A$\overline{B}$	F = AB PLUS A	F = AB PLUS A PLUS 1
H	H	H	L	F = AB	F = A$\overline{B}$ PLUS A	F = A$\overline{B}$ PLUS A PLUS 1
H	H	H	H	F = A	F = A	F = A PLUS 1

‡Each bit is shifted to the next more significant position

logic symbols† and signal designations (active-high data)

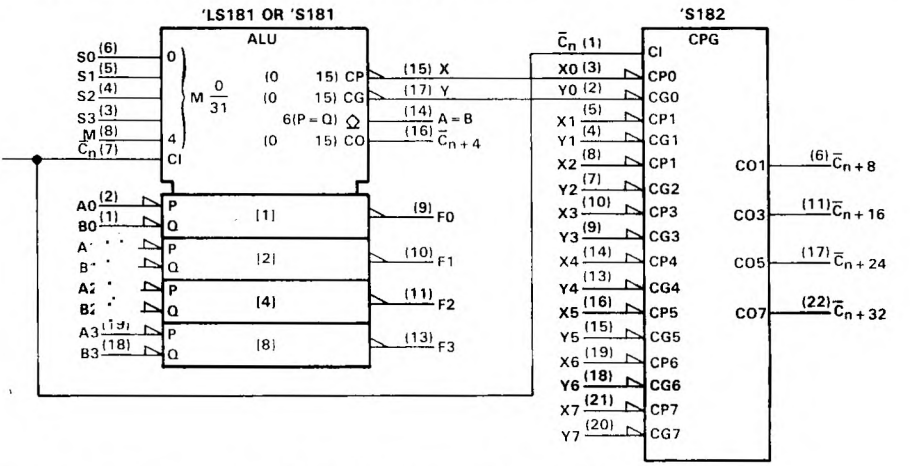

†These symbols are in accordance with ANSI/IEEE Std. 91-1984 and IEC Publication 617-12.
Pin numbers shown are for dual-in-line and "small outline" packages.

FIGURE 2 (USE WITH TABLE 2)

TABLE 2

SELECTION				ACTIVE-HIGH DATA		
				M = H	M = L; ARITHMETIC OPERATIONS	
S3	S2	S1	S0	LOGIC FUNCTIONS	$\overline{C_n}$ = H (no carry)	C_n = L (with carry)
L	L	L	L	$F = \overline{A}$	F = A	F = A PLUS 1
L	L	L	H	$F = \overline{A + B}$	F = A + B	F = (A + B) PLUS 1
L	L	H	L	$F = \overline{A}B$	$F = A + \overline{B}$	$F = (A + \overline{B})$ PLUS 1
L	L	H	H	F = 0	F = MINUS 1 (2's COMPL)	F = ZERO
L	H	L	L	$F = \overline{AB}$	$F = A$ PLUS $A\overline{B}$	$F = A$ PLUS $A\overline{B}$ PLUS 1
L	H	L	H	$F = \overline{B}$	$F = (A + B)$ PLUS $A\overline{B}$	$F = (A + B)$ PLUS $A\overline{B}$ PLUS 1
L	H	H	L	$F = A \oplus B$	F = A MINUS B MINUS 1	F = A MINUS B
L	H	H	H	$F = A\overline{B}$	$F = A\overline{B}$ MINUS 1	$F = A\overline{B}$
H	L	L	L	$F = \overline{A} + B$	F = A PLUS AB	F = A PLUS AB PLUS 1
H	L	L	H	$F = \overline{A \oplus B}$	F = A PLUS B	F = A PLUS B PLUS 1
H	L	H	L	F = B	$F = (A + \overline{B})$ PLUS AB	$F = (A + \overline{B})$ PLUS AB PLUS 1
H	L	H	H	F = AB	F = AB MINUS 1	F = AB
H	H	L	L	F = 1	F = A PLUS A†	F = A PLUS A PLUS 1
H	H	L	H	$F = A + \overline{B}$	$F = (A + B)$ PLUS A	$F = (A + B)$ PLUS A PLUS 1
H	H	H	L	F = A + B	$F = (A + \overline{B})$ PLUS A	$F = (A + \overline{B})$ PLUS A PLUS 1
H	H	H	H	F = A	F = A MINUS 1	F = A

†Each bit is shifted to the next more significant position.

TEXAS INSTRUMENTS
POST OFFICE BOX 655012 • DALLAS, TEXAS 75265

logic diagram (positive logic)

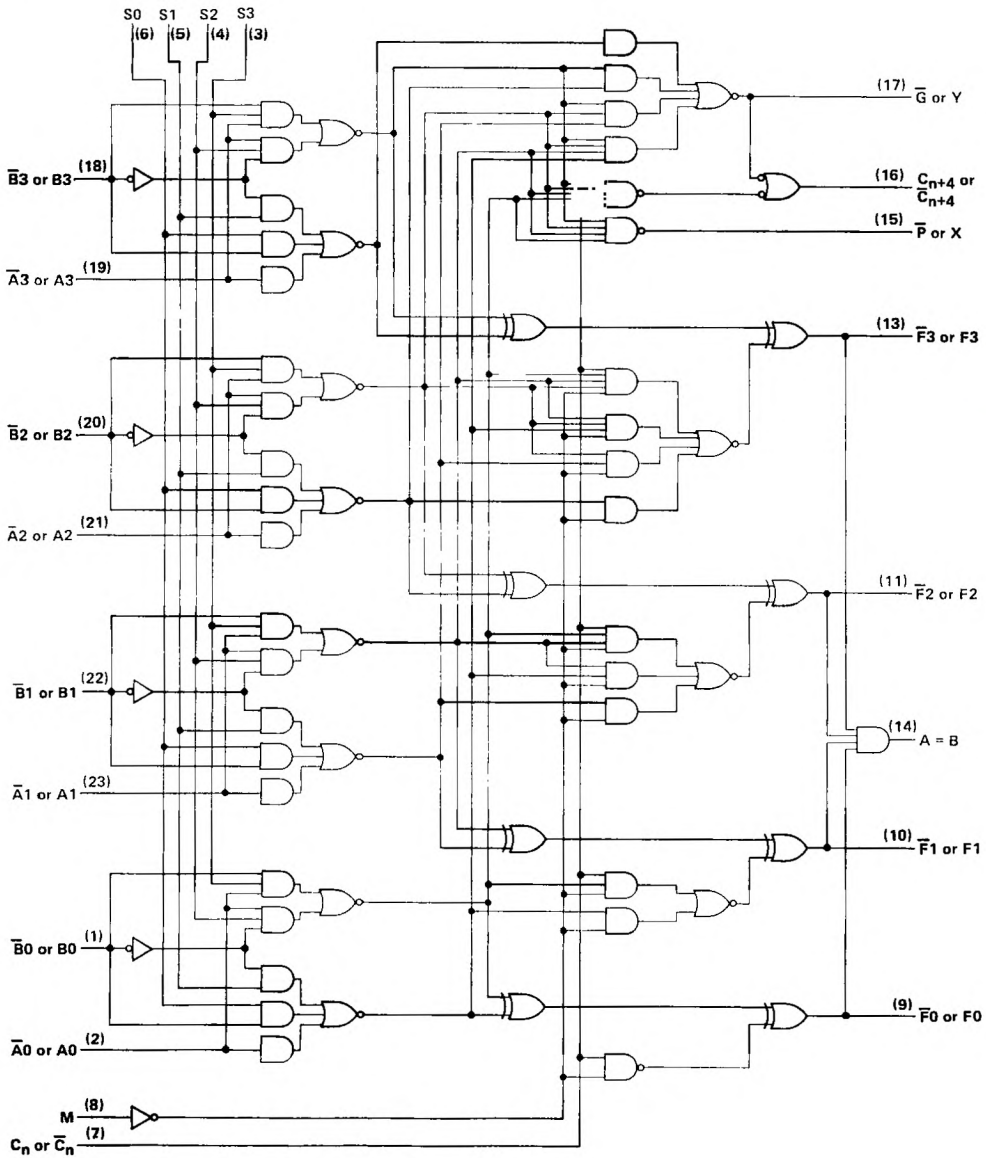

Pin numbers shown are for DW, J, N, and W packages.

absolute maximum ratings over recommended operating free-air temperature range (unless otherwise noted)

Supply voltage, V_{CC} (see Note 1) . . . . . 7 V
Input voltage . . . . . 5.5 V
Interemitter voltage (see Note 2) . . . . . 5.5 V
Operating free-air temperature range: SN54LS181 . . . . . −55°C to 125°C
SN74LS181 . . . . . 0°C to 70°C
Storage temperature range . . . . . −65°C to 150°C

NOTES: 1. Voltage values, except interemitter voltage, are with respect to network ground terminal.
2. This is the voltage between two emitters of a multiple-emitter transistor. For this circuit, this rating applies to each $\overline{A}$ input in conjunction with inputs S2 or S3, and to each $\overline{B}$ input in conjunction with inputs S0 or S3.

recommended operating conditions

	SN54LS181			SN74LS181			UNIT
	MIN	NOM	MAX	MIN	NOM	MAX	
Supply voltage, V_{CC}	4.5	5	5.5	4.75	5	5.25	V
High-level output current, I_{OH} (All outputs except A = B)			−400			−400	μA
Low-level output current, I_{OL}			4			8	mA
Operating free-air temperature, T_A	−55		125	0		70	°C

electrical characteristics over recommended operating free-air temperature range (unless otherwise noted)

PARAMETER			TEST CONDITIONS†		SN54LS181			SN74LS181			UNIT
					MIN	TYP‡	MAX	MIN	TYP‡	MAX	
V_{IH}	High-level input voltage				2			2			V
V_{IL}	Low-level input voltage						0.7			0.8	V
V_{IK}	Input clamp voltage		V_{CC} = MIN, I_I = −18 mA				−1.5			−1.5	V
V_{OH}	High-level output voltage, any output except A = B		V_{CC} = MIN, V_{IH} = 2 V, V_{IL} = V_{IL} max, I_{OH} = −400 μA		2.5	3.4		2.7	3.4		V
I_{OH}	High-level output current, A = B output only		V_{CC} = MIN, V_{IH} = 2 V, V_{IL} = V_{IL} max, V_{OH} = 5.5 V				100			100	μA
V_{OL}	Low-level output voltage	All outputs	V_{CC} = MIN, V_{IH} = 2 V, V_{IL} = V_{IL} max	I_{OL} = 4 mA		0.25	0.4		0.25	0.4	V
		Output $\overline{G}$		I_{OL} = 8 mA					0.35	0.5	
		Output $\overline{P}$		I_{OL} = 16 mA		0.47	0.7		0.47	0.7	
				I_{OL} = 8 mA		0.35	0.6		0.35	0.5	
I_I	Input current at max. input voltage	Mode input	V_{CC} = MAX, V_I = 5.5 V				0.1			0.1	mA
		Any $\overline{A}$ or $\overline{B}$ input					0.3			0.3	
		Any S input					0.4			0.4	
		Carry input					0.5			0.5	
I_{IH}	High-level input current	Mode input	V_{CC} = MAX, V_I = 2.7 V				20			20	μA
		Any $\overline{A}$ or $\overline{B}$ input					60			60	
		Any S input					80			80	
		Carry input					100			100	
I_{IL}	Low-level input current	Mode input	V_{CC} = MAX, V_I = 0.4 V				−0.4			−0.4	mA
		Any $\overline{A}$ or $\overline{B}$ input					−1.2			−1.2	
		Any S input					−1.6			−1.6	
		Carry input					−2			−2	
I_{OS}	Short-circuit output current, any output except A = B§		V_{CC} = MAX		−6		−40	−5		−42	mA
I_{CC}	Supply current		V_{CC} = MAX, See Note 3	Condition A		20	32		20	34	mA
				Condition B		21	35		21	37	

†For conditions shown as MIN or MAX, use the appropriate value specified under recommended operating conditions.
‡All typical values are at V_{CC} = 5 V, T_A = 25°C.
§Not more than one output should be shorted at a time.
NOTE 3: With outputs open, I_{CC} is measured for the following conditions:
A. S0 through S3, M, and $\overline{A}$ inputs are at 4.5 V, all other inputs are grounded.
B. S0 through S3 and M are at 4.5 V, all other inputs are grounded.

TEXAS INSTRUMENTS
POST OFFICE BOX 655012 • DALLAS, TEXAS 75265

switching characteristics, V_{CC} = 5 V, T_A = 25°C, (C_L = 15 pF, R_L = 2 kΩ, see note 4)

PARAMETER†	FROM (INPUT)	TO (OUTPUT)	TEST CONDITIONS	MIN	TYP	MAX	UNIT
t_{PLH}	C_n	C_{n+4}			18	27	ns
t_{PHL}					13	20	
t_{PLH}	Any $\overline{A}$ or $\overline{B}$	C_{n+4}	M = 0 V, S0 = S3 = 4.5 V, S1 = S2 = 0 V (SUM mode)		25	38	ns
t_{PHL}					25	38	
t_{PLH}	Any $\overline{A}$ or $\overline{B}$	C_{n+4}	M = 0 V, S0 = S3 = 0 V S1 = S2 = 4.5 V (DIFF mode)		27	41	ns
t_{PHL}					27	41	
t_{PLH}	C_n	Any F	M = 0 V (SUM or DIFF mode)		17	26	ns
t_{PHL}					13	20	
t_{PLH}	Any $\overline{A}$ or $\overline{B}$	$\overline{G}$	M = 0 V, S0 = S3 = 4.5 V, S1 = S2 = 0 V (SUM mode)		19	29	ns
t_{PHL}					15	23	
t_{PLH}	Any $\overline{A}$ or $\overline{B}$	$\overline{G}$	M = 0 V, S0 = S3 = 0 V, S1 = S2 = 4.5 V (DIFF mode)		21	32	ns
t_{PHL}					21	32	
t_{PLH}	Any $\overline{A}$ or $\overline{B}$	$\overline{P}$	M = 0 V, S0 = S3 = 4.5 V, S1 = S2 = 0 V, (SUM mode)		20	30	ns
t_{PHL}					20	30	
t_{PLH}	Any $\overline{A}$ or $\overline{B}$	$\overline{P}$	M = 0 V, S0 = S3 = 0 V, S1 = S2 = 4.5 V (DIFF mode)		20	30	ns
t_{PHL}					22	33	
t_{PLH}	$\overline{A}_i$ or $\overline{B}_i$	$\overline{F}_i$	M = 0 V, S0 = S3 = 4.5 V, S1 = S2 = 0 V (SUM mode)		21	32	ns
t_{PHL}					13	20	
t_{PLH}	$\overline{A}_i$ or $\overline{B}_i$	$\overline{F}_i$	M = 0 V, S0 = S3 = 0 V, S1 = S2 = 4.5 V (DIFF mode)		21	32	ns
t_{PHL}					21	32	
t_{PLH}	$\overline{A}_i$ or $\overline{B}_i$	$\overline{F}_i$	M = 4.5 V (logic mode)		22	33	ns
t_{PHL}					26	38	
t_{PLH}	Any $\overline{A}$ or $\overline{B}$	A = B	M = 0 V, S0 = S3 = 0 V, S1 = S2 = 4.5 V (DIFF mode)		33	50	ns
t_{PHL}					41	62	

†t_{PLH} = propagation delay time, low-to-high-level output
t_{PHL} = propagation delay time, high-to-low-level output
NOTE 4: Load circuits and voltage waveforms are shown in Section 1. Refer to Parameter Measurement Information page for test conditions.

schematics of inputs and outputs

EQUIVALENT OF EACH INPUT

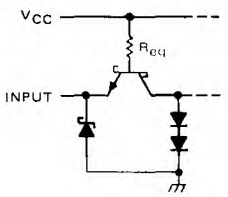

Mode control: R_{eq} = 17 kΩ NOM
Any $\overline{A}$ or $\overline{B}$: R_{eq} = 5.67 kΩ NOM
Any S: R_{eq} = 4.25 kΩ NOM
C_n: R_{eq} = 2.86 kΩ NOM

TYPICAL OF ALL OUTPUTS EXCEPT A = B

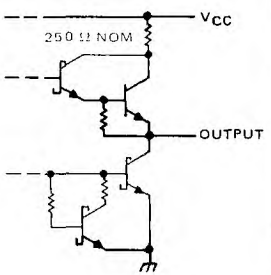

A = B OUTPUT

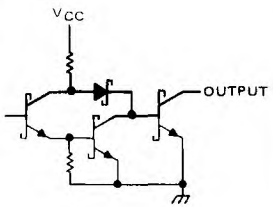

absolute maximum ratings over operating free-air temperature range (unless otherwise noted)

Supply voltage, V_{CC} (see Note 1) . . . . . 7 V
Input voltage . . . . . 5.5 V
Interemitter voltage (see Note 2) . . . . . 5.5 V
Operating free-air temperature: SN54S181 . . . . . −55°C to 125°C
SN74S181 . . . . . 0°C to 70°C
Storage temperature range . . . . . −65°C to 150°C

NOTES: 1. Voltage values, except interemitter voltage, are with respect to network ground terminal.
2. This is the voltage between two emitters of a multiple emitter transistor. For this circuit, this rating applies to each $\overline{A}$ input in conjunction with inputs S2 or S3, and to each $\overline{B}$ input in conjunction with inputs S0 or S3.

recommended operating conditions

	SN54S181			SN74S181			UNIT
	MIN	NOM	MAX	MIN	NOM	MAX	
Supply voltage, V_{CC}	4.5	5	5.5	4.75	5	5.25	V
High-level output current, I_{OH} (All outputs except A = B)			−1			−1	mA
Low-level output current, I_{OL}			20			20	mA
Operating free-air temperature, T_A	−55		125	0		70	°C

electrical characteristics over recommended operating free-air temperature range (unless otherwise noted)

PARAMETER			TEST CONDITIONS†			SN54S181 MIN	SN54S181 TYP‡	SN54S181 MAX	SN74S181 MIN	SN74S181 TYP‡	SN74S181 MAX	UNIT
V_{IH}	High-level input voltage					2			2			V
V_{IL}	Low-level input voltage							0.8			0.8	V
V_{IK}	Input clamp voltage		V_{CC} = MIN,	I_I = −18 mA				−1.2			−1.2	V
V_{OH}	High-level output voltage, any output except A = B		V_{CC} = MIN, V_{IL} = 0.8 V,	V_{IH} = 2 V, I_{OH} = −1 mA		2.5	3.4		2.7	3.4		V
I_{OH}	High-level output current, A = B output only		V_{CC} = MIN, V_{IL} = 0.8 V,	V_{IH} = 2 V, V_{OH} = 5.5 V				250			250	μA
V_{OL}	Low-level output voltage		V_{CC} = MIN, V_{IL} = 0.8 V,	V_{IH} = 2 V, I_{OL} = 20 mA				0.5			0.5	V
I_I	Input current at maximum input voltage		V_{CC} = MAX,	V_I = 5.5 V				1			1	mA
I_{IH}	High-level input current	Mode input	V_{CC} = MAX,	V_I = 2.5 V				50			50	μA
		Any $\overline{A}$ or $\overline{B}$ input						150			150	
		Any S input						200			200	
		Carry input						250			250	
I_{IL}	Low-level input current	Mode input	V_{CC} = MAX,	V_I = 0.5 V				−2			−2	mA
		Any $\overline{A}$ or $\overline{B}$ input						−6			−6	
		Any S						−8			−8	
		Carry input						−10			−10	
I_{OS}	Short-circuit output current, any output except A = B§		V_{CC} = MAX			−40		−100	−40		−100	mA
I_{CC}	Supply current		V_{CC} = MAX, See Note 3	T_A = 125°C,	W package only			195				mA
			V_{CC} = MAX,	See Note 3	All packages		120	220		120	220	

†For conditions shown as MIN or MAX, use the appropriate value specified under recommended operating conditions.
‡All typical values are at V_{CC} = 5 V, T_A = 25°C.
§Not more than one output should be shorted at a time.
NOTE 3: I_{CC} is measured for the following conditions (the typical and maximum values apply to both):
A. S0 through S3, M, and $\overline{A}$ inputs are at 4.5 V, all other inputs are grounded, and all outputs are open.
B. S0 through S3 and M are at 4.5 V, all other inputs grounded, and all outputs are open.

TEXAS INSTRUMENTS
POST OFFICE BOX 655012 • DALLAS, TEXAS 75265

switching characteristics, V_{CC} = 5 V, T_A = 25°C (C_L = 15 pF, R_L = 280 Ω, see note 4)

PARAMETER†	FROM (INPUT)	TO (OUTPUT)	TEST CONDITIONS	MIN	TYP	MAX	UNIT
t_{PLH}	C_n	C_{n+4}			7	10.5	ns
t_{PHL}					7	10.5	
t_{PLH}	Any $\overline{A}$ or $\overline{B}$	C_{n+4}	M = 0 V, S0 = S3 = 4.5 V, S1 = S2 = 0 V ($\overline{SUM}$ mode)		12.5	18.5	ns
t_{PHL}					12.5	18.5	
t_{PLH}	Any $\overline{A}$ or $\overline{B}$	C_{n+4}	M = 0 V, S0 = $\overline{S3}$ = 0 V, S1 = S2 = 4.5 V ($\overline{DIFF}$ mode)		15.5	23	ns
t_{PHL}					15.5	23	
t_{PLH}	C_n	Any $\overline{F}$	M = 0 V ($\overline{SUM}$ or $\overline{DIFF}$ mode)		7	12	ns
t_{PHL}					7	12	
t_{PLH}	Any $\overline{A}$ or $\overline{B}$	$\overline{G}$	M = 0 V, S0 = S3 = 4.5 V, S1 = S2 = 0 V ($\overline{SUM}$ mode)		8	12	ns
t_{PHL}					7.5	12	
t_{PLH}	Any $\overline{A}$ or $\overline{B}$	$\overline{G}$	M = 0 V, S0 = $\overline{S3}$ = 0 V, S1 = S2 = 4.5 V ($\overline{DIFF}$ mode)		10.5	15	ns
t_{PHL}					10.5	15	
t_{PLH}	Any $\overline{A}$ or $\overline{B}$	$\overline{P}$	M = 0 V, S0 = S3 = 4.5 V, S1 = S2 = 0 V ($\overline{SUM}$ mode)		7.5	12	ns
t_{PHL}					7.5	12	
t_{PLH}	Any $\overline{A}$ or $\overline{B}$	$\overline{P}$	M = 0 V, S0 = $\overline{S3}$ = 0 V, S1 = S2 = 4.5 V ($\overline{DIFF}$ mode)		10.5	15	ns
t_{PHL}					10.5	15	
t_{PLH}	$\overline{A}_i$ or $\overline{B}_i$	$\overline{F}_i$	M = 0 V, S0 = S3 = 4.5 V, S1 = S2 = 0 V ($\overline{SUM}$ mode)		11	16.5	ns
t_{PHL}					11	16.5	
t_{PLH}	$\overline{A}_i$ or $\overline{B}_i$	$\overline{F}_i$	M = 0 V, S0 = $\overline{S3}$ = 0 V, S1 = S2 = 4.5 V ($\overline{DIFF}$ mode)		14	20	ns
t_{PHL}					14	22	
t_{PLH}	$\overline{A}_i$ or $\overline{B}_i$	$\overline{F}_i$	M = 4.5 V (logic mode)		14	20	ns
t_{PHL}					14	22	
t_{PLH}	Any $\overline{A}$ or $\overline{B}$	A = B	M = 0 V, S0 = S3 = 0 V, S1 = S2 = 4.5 V ($\overline{DIFF}$ mode)		15	23	ns
t_{PHL}					20	30	

†t_{PLH} = propagation delay time, low-to-high-level output
t_{PHL} = propagation delay time, high-to-low-level output
NOTE 4: Load circuits and voltage wveforms are shown in Section 1. Refer to Parameter Measurement Information page for test conditions.

schematics of inputs and outputs

EQUIVALENT OF EACH INPUT

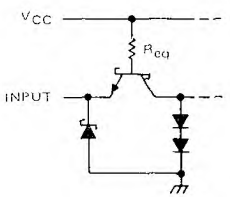

Mode control: R_{eq} = 2.8 kΩ NOM
Any $\overline{A}$ or $\overline{B}$: R_{eq} = 940 Ω NOM
Any S: R_{eq} = 700 Ω NOM
C_n: R_{eq} = 560 Ω NOM

TYPICAL OF ALL OUTPUTS EXCEPT A = B

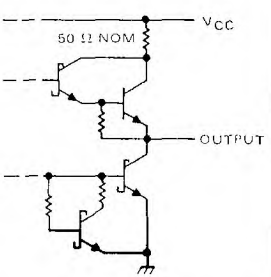

A = B OUTPUT

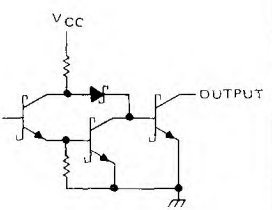

PARAMETER MEASUREMENT INFORMATION

$\overline{\text{SUM}}$ MODE TEST TABLE

FUNCTION INPUTS: S0 = S3 = 4.5 V, S1 = S2 = M = 0 V

PARAMETER	INPUT UNDER TEST	OTHER INPUT SAME BIT		OTHER DATA INPUTS		OUTPUT UNDER TEST	OUTPUT WAVEFORM (See Note 4)
		APPLY 4.5 V	APPLY GND	APPLY 4.5 V	APPLY GND		
	$\overline{A}_i$	$\overline{B}_i$	None	Remaining $\overline{A}$ and $\overline{B}$	C_n	$\overline{F}_i$	In-Phase
t_{PHL}	$\overline{B}_i$	$\overline{A}_i$	None	Remaining $\overline{A}$ and $\overline{B}$	C_n	$\overline{F}_i$	In-Phase
t_{PLH}	$\overline{A}_i$	$\overline{B}_i$	None	None	Remaining $\overline{A}$ and $\overline{B}$, C_n	$\overline{P}$	In Phase
t_{PHL}	$\overline{B}_i$	$\overline{A}_i$	None	None	Remaining $\overline{A}$ and $\overline{B}$, C_n	$\overline{P}$	In Phase
t_{PLH}	$\overline{A}_i$	None	$\overline{B}_i$	Remaining $\overline{B}$	Remaining $\overline{A}$, C_n	$\overline{G}$	In Phase
t_{PHL}	$\overline{B}_i$	None	$\overline{A}_i$	Remaining $\overline{B}$	Remaining $\overline{A}$, C_n	$\overline{G}$	In-Phase
t_{PLH}	C_n	None	None	All A	All B	Any $\overline{F}$ or C_{n+4}	In Phase
t_{PHL}							
t_{PLH}	$\overline{A}_i$	None	$\overline{B}_i$	Remaining $\overline{B}$	Remaining $\overline{A}$, C_n	C_{n+4}	Out-of-Phase
t_{PHL}	$\overline{B}_i$	None	$\overline{A}_i$	Remaining $\overline{B}$	Remaining $\overline{A}$, C_n	C_{n+4}	Out-of-Phase

$\overline{\text{DIFF}}$ MODE TEST TABLE

FUNCTION INPUTS: S1 = S2 = 4.5 V, S0 = S3 = M = 0 V

PARAMETER	INPUT UNDER TEST	OTHER INPUT SAME BIT		OTHER DATA INPUTS		OUTPUT UNDER TEST	OUTPUT WAVEFORM (See Note 4)
		APPLY 4.5 V	APPLY GND	APPLY 4.5 V	APPLY GND		
t_{PLH}	$\overline{A}$	None	$\overline{B}_i$	Remaining $\overline{A}$	Remaining $\overline{B}$, C_n	$\overline{F}_i$	In Phase
t_{PHL}							
t_{PLH}	$\overline{B}_i$	$\overline{A}_i$	None	Remaining $\overline{A}$	Remaining $\overline{B}$, C_n	$\overline{F}_i$	Out of Phase
t_{PHL}							
	$\overline{A}_i$	None	$\overline{B}_i$	None	Remaining $\overline{A}$ and $\overline{B}$, C_n	$\overline{P}$	In-Phase
t_{PHL}							
	$\overline{B}_i$	$\overline{A}_i$	None	None	Remaining $\overline{A}$ and $\overline{B}$, C_n	$\overline{P}$	Out-of-Phase
	$\overline{A}_i$	$\overline{B}_i$	None	None	Remaining $\overline{A}$ and $\overline{B}$, C_n	$\overline{G}$	In-Phase
t_{PHL}							
t_{PLH}	$\overline{B}_i$	None	$\overline{A}_i$	None	Remaining $\overline{A}$ and $\overline{B}$, C_n	$\overline{G}$	Out-of-Phase
t_{PHL}							
t_{PLH}	$\overline{A}_i$	None	$\overline{B}_i$	Remaining $\overline{A}$	Remaining $\overline{B}$, C_n	A = B	In Phase
t_{PHL}							
t_{PLH}	$\overline{B}_i$	$\overline{A}_i$	None	Remaining $\overline{A}$	Remaining $\overline{B}$, C_n	A = B	Out-of Phase
t_{PHL}							
t_{PLH}	C_n	None	None	All $\overline{A}$ and $\overline{B}$	None	C_{n+4} or any $\overline{F}$	In Phase
t_{PHL}							
	$\overline{A}_i$	$\overline{B}_i$	None	None	Remaining $\overline{A}$, $\overline{B}$, C_n	C_{n+4}	Out-of-Phase
	$\overline{B}_i$	None	$\overline{A}_i$	None	Remaining $\overline{A}$, $\overline{B}$, C_n	C_{n+4}	In -Phase
t_{PHL}							

LOGIC MODE TEST TABLE

FUNCTION INPUTS. S1 = S2 = M = 4.5 V, S0 = S3 = 0 V

PARAMETER	INPUT UNDER TEST	OTHER INPUT SAME BIT		OTHER DATA INPUTS		OUTPUT UNDER TEST	OUTPUT WAVEFORM (See Note 4)
		APPLY 4.5 V	APPLY GND	APPLY 4.5 V	APPLY GND		
t_{PLH}	$\overline{A}_i$	$\overline{B}_i$	None	None	Remaining $\overline{A}$ and $\overline{B}$, C_n	$\overline{F}_i$	Out of Phase
t_{PHL}							
t_{PLH}	$\overline{B}_i$	$\overline{A}_i$	None	None	Remaining $\overline{A}$ and $\overline{B}$, C_n	$\overline{F}_i$	Out-of Phase
t_{PHL}							

NOTE 4: Load circuits and voltage waveforms are shown in Section 1.

TEXAS INSTRUMENTS
POST OFFICE BOX 655012 • DALLAS, TEXAS 75265

DECEMBER 1972—REVISED MARCH 1988

- **Directly Compatible for Use With:**
  SN54LS181/SN74LS181,
  SN54S281/SN74S281, SN54S381,
  SN74S381, SN54S481/SN74S481

PIN DESIGNATIONS

ALTERNATIVE	DESIGNATIONS†	PIN NOS.	
$\overline{G0}$, $\overline{G1}$, $\overline{G2}$, $\overline{G3}$	G0, G1, G2, G3	3, 1, 14, 5	CARRY GENERATE INPUTS
$\overline{P0}$, $\overline{P1}$, $\overline{P2}$, $\overline{P3}$	P0, P1, P2, P3	4, 2, 15, 6	CARRY PROPAGATE INPUTS
C_n	$\overline{C}_n$	13	CARRY INPUT
C_{n+x}, C_{n+y}, C_{n+z}	$\overline{C}_{n+x}$, $\overline{C}_{n+y}$, $\overline{C}_{n+z}$	12, 11, 9	CARRY OUTPUTS
$\overline{G}$	Y	10	CARRY GENERATE OUTPUT
$\overline{P}$	X	7	CARRY PROPAGATE OUTPUT
V_{CC}		16	SUPPLY VOLTAGE
		8	GROUND

†Interpretations are illustrated in the 'LS181, 'S181 data sheet.

SN54S182 . . . J OR W PACKAGE
SN74S182 . . . D OR N PACKAGE
(TOP VIEW)

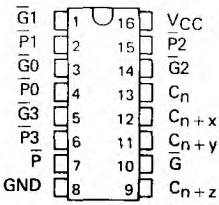

SN54S182 . . . FK PACKAGE
(TOP VIEW)

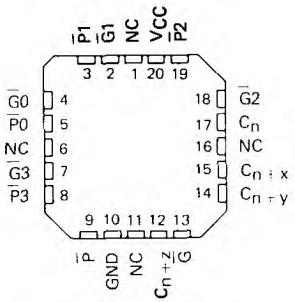

NC - No internal connection

logic symbol‡

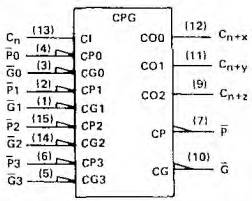

‡This symbol is in accordance with ANSI/IEEE Std. 91-1984 and IEC Publication 617-12.
Pin numbers shown are for D, J, N, and W packages.

description

The SN54S182 and SN74S182 are high-speed, look-ahead carry generators capable of anticipating a carry across four binary adders or group of adders. They are cascadable to perform full look-ahead across n-bit adders. Carry, generate-carry, and propagate-carry functions are provided as enumerated in the pin designation table above.

When used in conjunction with the 'LS181 or 'S181 arithmetic logic unit (ALU), these generators provide high-speed carry look-ahead capability for any word length. Each 'S182 generates the look-ahead (anticipated carry) across a group of four ALUs and, in addition, other carry look-ahead circuits may be employed to anticipate carry across sections of four look-ahead packages up to n-bits. The method of cascading 'S182 circuits to perform multilevel look-ahead is illustrated under typical application data.

The carry functions (inputs, outputs, generate, and propagate) of the look-ahead generators are implemented in the compatible forms for direct connection to the ALU. Reinterpretations of carry functions as explained on the 'LS181 and 'S181 data sheet are also applicable to and compatible with the look-ahead generator. Logic equations for the 'S182 are:

$$C_{n+x} = G0 + P0\,C_n$$
$$C_{n+y} = G1 + P1\,G0 + P1\,P0\,C_n$$
$$C_{n+z} = G2 + P2\,G1 + P2\,P1\,G0 + P2\,P1\,P0\,C_n$$
$$\overline{G} = \overline{G3 + P3\,G2 + P3\,P2\,G1 + P3\,P2\,P1\,G0}$$
$$\overline{P} = \overline{P3\,P2\,P1\,P0}$$

or

$$\overline{C}_{n+x} = \overline{Y0\,(X0 + C_n)}$$
$$\overline{C}_{n+y} = \overline{Y1\,[X1 + Y0 \cdot \overline{(X0 + C_n)}]}$$
$$\overline{C}_{n+z} = \overline{Y2\,\{X2 + Y1\,[X1 + Y0\,(X0 + C_n)]\}}$$
$$Y = Y3\,(X3 + Y2)\,(X3 + X2 + Y1)\,(X3 + X2 + X1 + Y0)$$
$$X = X3 + X2 + X1 + X0$$

PRODUCTION DATA documents contain information current as of publication date. Products conform to specifications per the terms of Texas Instruments standard warranty. Production processing does not necessarily include testing of all parameters.

FUNCTION TABLE FOR $\overline{G}$ OUTPUT

INPUTS							OUTPUT
$\overline{G}3$	$\overline{G}2$	$\overline{G}1$	$\overline{G}0$	$\overline{P}3$	$\overline{P}2$	$\overline{P}1$	$\overline{G}$
L	X	X	X	X	X	X	L
X	L	X	X	L	X	X	L
X	X	L	X	L	L	X	L
X	X	X	L	L	L	L	L
All other combinations							H

FUNCTION TABLE FOR $\overline{P}$ OUTPUT

INPUTS				OUTPUT
$\overline{P}3$	$\overline{P}2$	$\overline{P}1$	$\overline{P}0$	$\overline{P}$
L	L	L	L	L
All other combinations				H

FUNCTION TABLE FOR C_{n+x} OUTPUT

INPUTS			OUTPUT
$\overline{G}0$	$\overline{P}0$	Cn	C_{n+x}
L	X	X	H
X	L	H	H
All other combinations			L

FUNCTION TABLE FOR C_{n+y} OUTPUT

INPUTS					OUTPUT
$\overline{G}1$	$\overline{G}0$	$\overline{P}1$	$\overline{P}0$	C_n	C_{n+y}
L	X	X	X	X	H
X	L	L	X	X	H
X	X	L	L	H	H
All other combinations					L

FUNCTION TABLE FOR C_{n+z} OUTPUT

INPUTS							OUTPUT
$\overline{G}2$	$\overline{G}1$	$\overline{G}0$	$\overline{P}2$	$\overline{P}1$	$\overline{P}0$	C_n	C_{n+z}
L	X	X	X	X	X	X	H
X	L	X	L	X	X	X	H
X	X	L	L	L	X	X	H
X	X	X	L	L	L	H	H
All other combinations							L

H = high level, L = low level, X = irrelevant
Any inputs not shown in a given table are irrelevant with respect to that output.

logic diagram (positive logic)

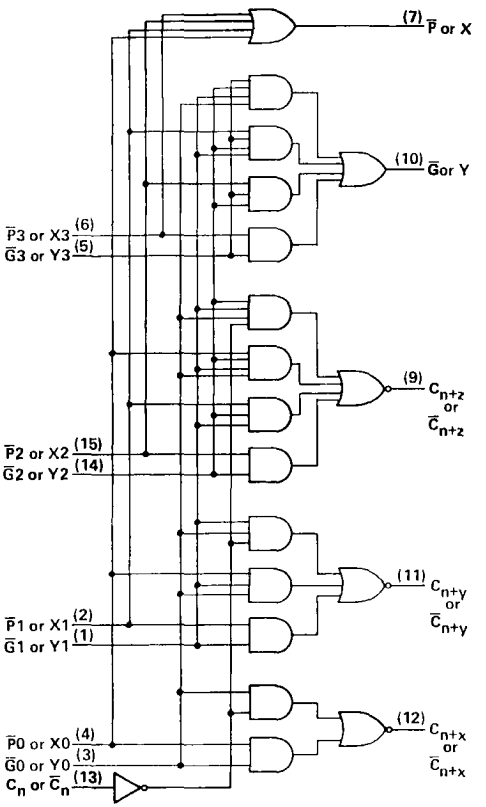

Pin numbers shown are for D, J, N, and W packages.

TEXAS INSTRUMENTS
POST OFFICE BOX 655012 • DALLAS, TEXAS 75265

schematics of inputs and outputs

EQUIVALENT OF EACH INPUT

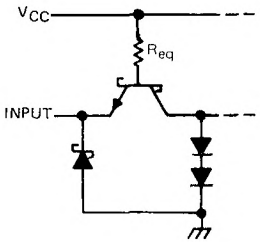

INPUT	R_{eq} NOM
C_n	2.8 kΩ
$\overline{P}3$	1.4 kΩ
$\overline{P}2$	940 Ω
$\overline{P}0$, $\overline{P}1$, $\overline{G}3$	700 Ω
$\overline{G}0$, $\overline{G}4$	400 Ω
$\overline{G}1$	350 Ω

TYPICAL OF ALL OUTPUTS

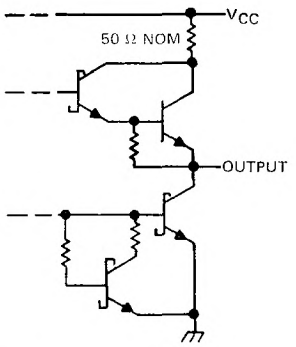

absolute maximum ratings over operating free-air temperature range (unless otherwise noted)

Supply voltage, V_{CC} (see Note 1) . . . . . 7 V
Input voltage . . . . . 5.5 V
Interemitter voltage (see Note 2) . . . . . 5.5 V
Operating free-air temperature range: SN54S182 . . . . . −55°C to 125°C
SN74S182 . . . . . 0°C to 70°C
Storage temperature range . . . . . −65°C to 150°C

NOTES: 1. Voltage values, except interemitter voltage, are with respect to network ground terminal.
2. This is the voltage between two emitters of a multiple-emitter input transistor. For these circuits, this rating applies to each $\overline{G}$ input in conjunction with any other $\overline{G}$ input or in conjunction with any $\overline{P}$ input.

recommended operating conditions

	SN54S182			SN74S182			UNIT
	MIN	NOM	MAX	MIN	NOM	MAX	
Supply voltage, V_{CC}	4.5	5	5.5	4.75	5	5.25	V
High-level output current, I_{OH}			−1			−1	mA
Low-level output current, I_{OL}			20			20	mA
Operating free-air temperature, T_A	−55		125	0		70	°C

electrical characteristics over recommended operating free-air temperature range (unless otherwise noted)

PARAMETER			TEST CONDITIONS†	SN54S182			SN74S182			UNIT
				MIN	TYP‡	MAX	MIN	TYP‡	MAX	
V_{IH}	High-level input voltage			2			2			V
V_{IL}	Low-level input voltage					0.8			0.8	V
V_{IK}	Input clamp voltage		V_{CC} = MIN, I_I = −18 mA			−1.2			−1.2	V
V_{OH}	High-level output voltage		V_{CC} = MIN, V_{IH} = 2 V, V_{IL} = 0.8 V, I_{OH} = −1 mA	2.5	3.4		2.7	3.4		V
V_{OL}	Low-level output voltage		V_{CC} = MIN, V_{IH} = 2 V, V_{IL} = 0.8 V, I_{OL} = 20 mA			0.5			0.5	V
I_I	Input current at maximum input voltage		V_{CC} = MAX, V_I = 5.5 V			1			1	mA
I_{IH}	High-level input current	C_n input	V_{CC} = MAX, V_I = 2.7 V			50			50	μA
		$\overline{P}3$ input				100			100	
		$\overline{P}2$ input				150			150	
		$\overline{P}0$, $\overline{P}1$, or $\overline{G}3$ input				200			200	
		$\overline{G}0$ or $\overline{G}2$ input				350			350	
		$\overline{G}1$ input				400			400	
I_{IL}	Low-level input current	C_n input	V_{CC} = MAX, V_I = 0.5 V			−2			−2	mA
		$\overline{P}3$ input				−4			−4	
		$\overline{P}2$ input				−6			−6	
		$\overline{P}0$, $\overline{P}1$, or $\overline{G}3$ input				−8			−8	
		$\overline{G}0$ or $\overline{G}2$ input				−14			−14	
		$\overline{G}1$ input				−16			−16	
I_{OS}	Short-circuit output current§		V_{CC} = MAX	−40		−100	−40		−100	mA
I_{CCH}	Supply current, all outputs high		V_{CC} = 5 V, See Note 3		35	65		35	70	mA
I_{CCL}	Supply current, all outputs low		V_{CC} = MAX, See Note 4		69	99		69	109	mA

† For conditions shown as MIN or MAX, use the appropriate value specified under recommended operating conditions for the applicable type.
‡ All typical values are at V_{CC} = 5 V, T_A = 25°C.
§ Not more than one output should be shorted at a time and duration of the short-circuit test should not exceed one second.
NOTES: 3. I_{CCH} is measured with all outputs open, inputs $\overline{P}3$ and $\overline{G}3$ at 4.5 V, and all other inputs grounded. MAX is determined at 5.5 V.
4. I_{CCL} is measured with all outputs open; inputs $\overline{G}0$, $\overline{G}1$, and $\overline{G}2$ at 4.5 V; and all other inputs grounded.

switching characteristics, V_{CC} = 5 V, T_A = 25°C

PARAMETER	FROM (INPUT)	TO (OUTPUT)	TEST CONDITIONS	MIN	TYP	MAX	UNIT
t_{PLH}	$\overline{G}0$, $\overline{G}1$, $\overline{G}2$, $\overline{G}3$, P0, P1, P2, or P3	C_{n+x}, C_{n+y}, or C_{n+z}	R_L = 280 Ω, C_L = 15 pF, See Note 5		4.5	7	ns
t_{PHL}					4.5	7	
t_{PLH}	$\overline{G}0$, $\overline{G}1$, $\overline{G}2$, $\overline{G}3$, P1, P2, or P3	$\overline{G}$			5	7.5	ns
t_{PHL}					7	10.5	
t_{PLH}	$\overline{P}0$, $\overline{P}1$, $\overline{P}2$, or $\overline{P}3$	$\overline{P}$			4.5	6.5	ns
t_{PHL}					6.5	10	
t_{PLH}	C_n	C_{n+x}, C_{n+y}, or C_{n+z}			6.5	10	ns
t_{PHL}					7	10.5	

NOTE 5: Load circuits and voltage waveforms are shown in Section 1.

TEXAS INSTRUMENTS
POST OFFICE BOX 655012 • DALLAS, TEXAS 75265

TYPICAL APPLICATION DATA

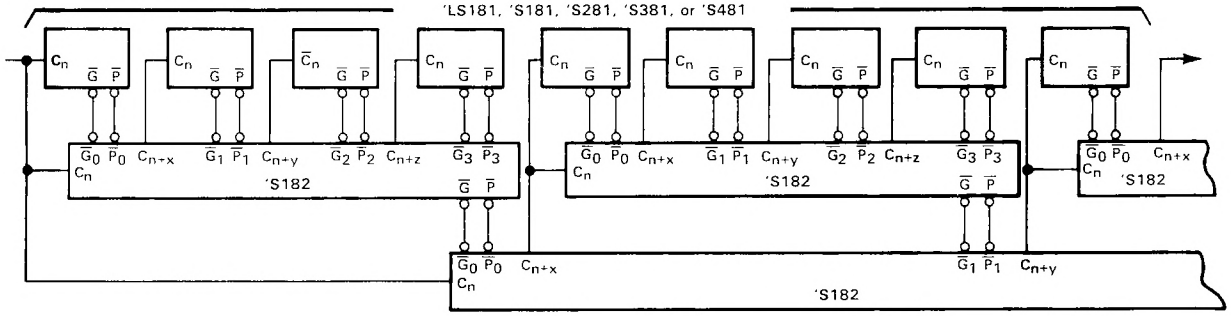

64-BIT ALU, FULL-CARRY LOOK-AHEAD IN THREE LEVELS

Remaining inputs and outputs of 'LS181, 'S181, 'S281, 'S381, and 'S481 are not shown

BULLETIN NO. DL-57711848, OCTOBER 1976—REVISED MARCH 1988

- For Use in High-Speed Wallace-Tree Summing Networks
- High-Speed, High-Fan-Out Darlington Outputs
- Input Clamping Diodes Simplify System Design

TYPES	TYPICAL AVERAGE PROPAGATION DELAY TIME	TYPICAL POWER DISSIPATION
'LS183	15 ns	23 mW per bit

SN54LS183 . . . J OR W PACKAGE
SN74LS183 . . . D OR N PACKAGE
(TOP VIEW)

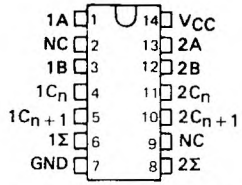

SN54LS183 . . . FK PACKAGE
(TOP VIEW)

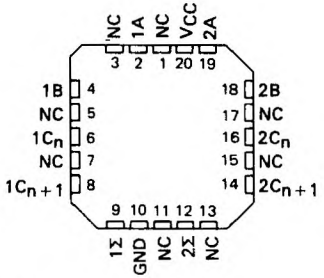

NC - No internal connection

description

These dual full adders feature an individual carry output from each bit for use in multiple-input, carry-save techniques to produce the true sum and true carry outputs with no more than two gate delays. The circuits utilize high-speed, high-fan-out, transistor-transistor logic (TTL), but are compatible with both DTL and TTL families. SN54LS183 is characterized for operation over the full military temperature range of −55°C to 125°C; SN74LS183 is characterized for operation from 0°C to 70°C.

logic diagram (each adder)

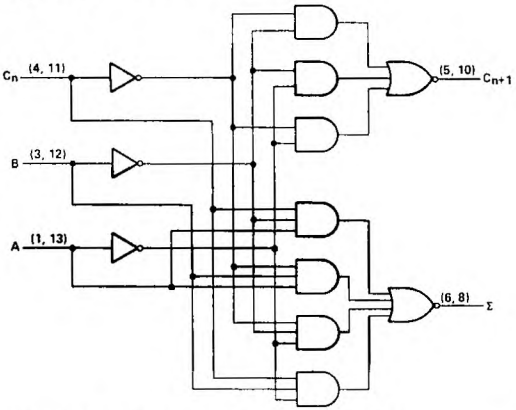

Pin numbers shown are for D, J, N, and W packages.

FUNCTION TABLE
(EACH ADDER)

INPUTS			OUTPUTS	
C_n	B	A	Σ	C_{n+1}
L	L	L	L	L
L	L	H	H	L
L	H	L	H	L
L	H	H	L	H
H	L	L	H	L
H	L	H	L	H
H	H	L	L	H
H	H	H	H	H

H = high level, L = low level

schematics of inputs and outputs

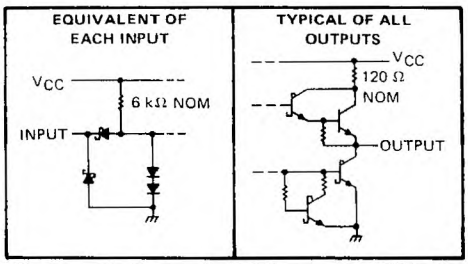

PRODUCTION DATA documents contain information current as of publication date. Products conform to specifications per the terms of Texas Instruments standard warranty. Production processing does not necessarily include testing of all parameters.

absolute maximum ratings over operating free-air temperature range (unless otherwise noted)

Supply voltage V_{CC} (see Note 1) . . . . . 7 V
Input voltage . . . . . 7 V
Operating free-air temperature range: SN54LS183 Circuits . . . . . −55°C to 125°C
SN74LS183 Circuits . . . . . 0°C to 70°C
Storage temperature range . . . . . −65°C to 150°C

NOTE 1: Voltage values, except interemitter voltage, are with respect to network ground terminal.

recommended operating conditions

	SN54LS183			SN74LS183			UNIT
	MIN	NOM	MAX	MIN	NOM	MAX	
Supply voltage, V_{CC}	4.5	5	5.5	4.75	5	5.25	V
High-level output current, I_{OH}			−400			−400	μA
Low-level output current, I_{OL}			4			8	mA
Operating free-air temperature, T_A	−55		125	0		70	°C

electrical characteristics over recommended operation free-air temperature range (unless otherwise noted)

PARAMETER		TEST CONDITIONS†		MIN	TYP‡	MAX	MIN	TYP‡	MAX	UNIT
V_{IH}	High-level input voltage			2			2			V
V_{IL}	Low-level input voltage					0.7			0.8	V
V_{IK}	Input clamp voltage	V_{CC} = MIN,	I_I = −18 mA			−1.5			−1.5	V
V_{OH}	High-level output voltage	V_{CC} = MIN, V_{IL} = V_{IL} max,	V_{IH} = 2 V, I_{OH} = −400 μA	2.5	3.4		2.7	3.4		V
V_{OL}	Low-level output voltage	V_{CC} = MIN, V_{IH} = 2 V, V_{IL} = V_{IL} max,	I_{OL} = 4 mA		0.25	0.4		0.25	0.4	V
			I_{OL} = 8 mA					0.35	0.5	
I_I	Input current at maximum input voltage	V_{CC} = MAX,	V_I = 7 V			0.3			0.3	mA
I_{IH}	High-level input current	V_{CC} = MAX,	V_I = 2.7 V			60			60	μA
I_{IL}	Low-level input current	V_{CC} = MAX,	V_I = 0.4 V			−1.2			−1.2	mA
I_{OS}	Short-circuit output current§	V_{CC} = MAX		−20		−100	−20		−100	mA
I_{CCL}	Supply current, all outputs low	V_{CC} = MAX,	See Note 3		10	17		10	17	mA
I_{CCH}	Supply current, all outputs high	V_{CC} = MAX,	See Note 4		8	14		8	14	mA

† For conditions shown as MIN or MAX, use the appropriate value specified under recommended operating conditions for the applicable type.
‡ All typical values are at V_{CC} = 5 V, T_A = 25°C.
§ Not more than one output should be shorted at a time, and duration of the short circuit should not exceed one second.
NOTES: 3. I_{CCL} is measured with all outputs open and all inputs grounded.
4. I_{CCH} is measured with all outputs open and all inputs at 4.5 V.

switching characteristics, V_{CC} = 5 V, T_A = 25°C

PARAMETER		TEST CONDITIONS	MIN	TYP	MAX	UNIT
t_{PLH}	Propagation delay time, low-to-high-level output	C_L = 15 pF, R_L = 2 kΩ, See Note 5		9	15	ns
t_{PHL}	Propagation delay time, high-to-low-level output			20	33	ns

NOTE 5: Load circuits and voltage waveforms are shown in Section 1.

TEXAS INSTRUMENTS
POST OFFICE BOX 655012 • DALLAS, TEXAS 75265

- Counts 8-4-2-1 BCD or Binary
- Single Down/Up Count Control Line
- Count Enable Control Input
- Ripple Clock Output for Cascading
- Asynchronously Presettable with Load Control
- Parallel Outputs
- Cascadable for n-Bit Applications

TYPE	AVERAGE PROPAGATION DELAY	TYPICAL MAXIMUM CLOCK FREQUENCY	TYPICAL POWER DISSIPATION
'190,'191	20ns	25MHz	325mW
'LS190,'LS191	20ns	25MHz	100mW

SN54190, SN54191, SN54LS190,
SN54LS191 . . . J PACKAGE
SN74190, SN74191 . . . N PACKAGE
SN74LS190, SN74LS191 . . . D OR N PACKAGE
(TOP VIEW)

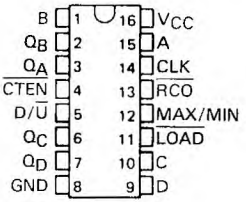

SN54LS190, SN54LS191 . . . FK PACKAGE
(TOP VIEW)

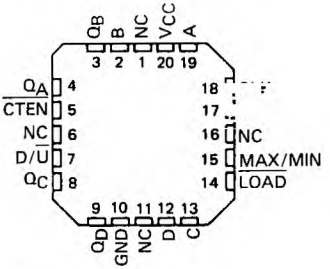

NC - No internal connection

description

The '190, 'LS190, '191, and 'LS191 are synchronous, reversible up/down counters having a complexity of 58 equivalent gates. The '191 and 'LS191 are 4-bit binary counters and the '190 and 'LS190 are BCD counters. Synchronous operation is provided by having all flip-flops clocked simultaneously so that the outputs change coincident with each other when so instructed by the steering logic. This mode of operation eliminates the output counting spikes normally associated with asynchronous (ripple clock) counters.

The outputs of the four master-slave flip-flops are triggered on a low-to-high transition of the clock input if the enable input is low. A high at the enable input inhibits counting. Level changes at the enable input should be made only when the clock input is high. The direction of the count is determined by the level of the down/up input. When low, the counter count up and when high, it counts down. A false clock may occur if the down/up input changes while the clock is low. A false ripple carry may occur if both the clock and enable are low and the down/up input is high during a load pulse.

These counters are fully programmable; that is, the outputs may be preset to either level by placing a low on the load input and entering the desired data at the data inputs. The output will change to agree with the data inputs independently of the level of the clock input. This feature allows the counters to be used as modulo-N dividers by simply modifying the count length with the preset inputs.

The clock, down/up, and load inputs are buffered to lower the drive requirement which significantly reduces the number of clock drivers, etc., required for long parallel words.

Two outputs have been made available to perform the cascading function: ripple clock and maximum/minimum count. The latter output produces a high-level output pulse with a duration approximately equal to one complete cycle of the clock when the counter overflows or underflows. The ripple clock output produces a low-level output pulse equal in width to the low-level portion of the clock input when an overflow or underflow condition exists. The counters can be easily cascaded by feeding the ripple clock output to the enable input of the succeeding counter if parallel clocking is used, or to the clock input if parallel enabling is used. The maximum/minimum count output can be used to accomplish look-ahead for high-speed operation.

Series 54' and 54LS' are characterized for operation over the full military temperature range of −55°C to 125°C; Series 74' and 74LS' are characterized for operation from 0°C to 70°C.

PRODUCTION DATA documents contain information current as of publication date. Products conform to specifications per the terms of Texas Instruments standard warranty. Production processing does not necessarily include testing of all parameters.

logic symbols†

'190, 'LS190

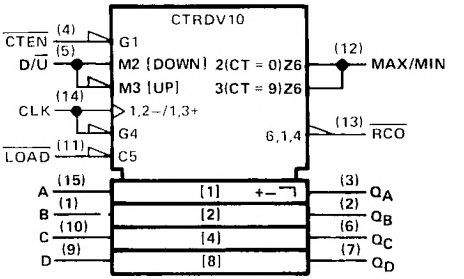

'191, 'LS191

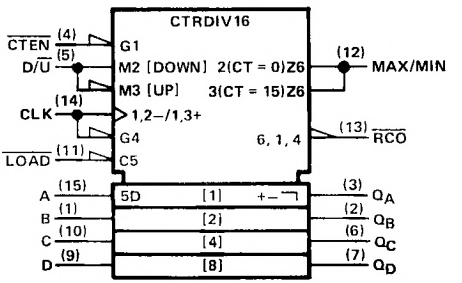

† These symbols are accordance with ANSI/IEEE Std 91-1984 and IEC Publication 617-12.
Pin numbers shown are for D, J, and N packages.

TEXAS INSTRUMENTS
POST OFFICE BOX 655012 • DALLAS, TEXAS 75265

logic diagram (positive logic)

'190, 'LS190 DECADE COUNTERS

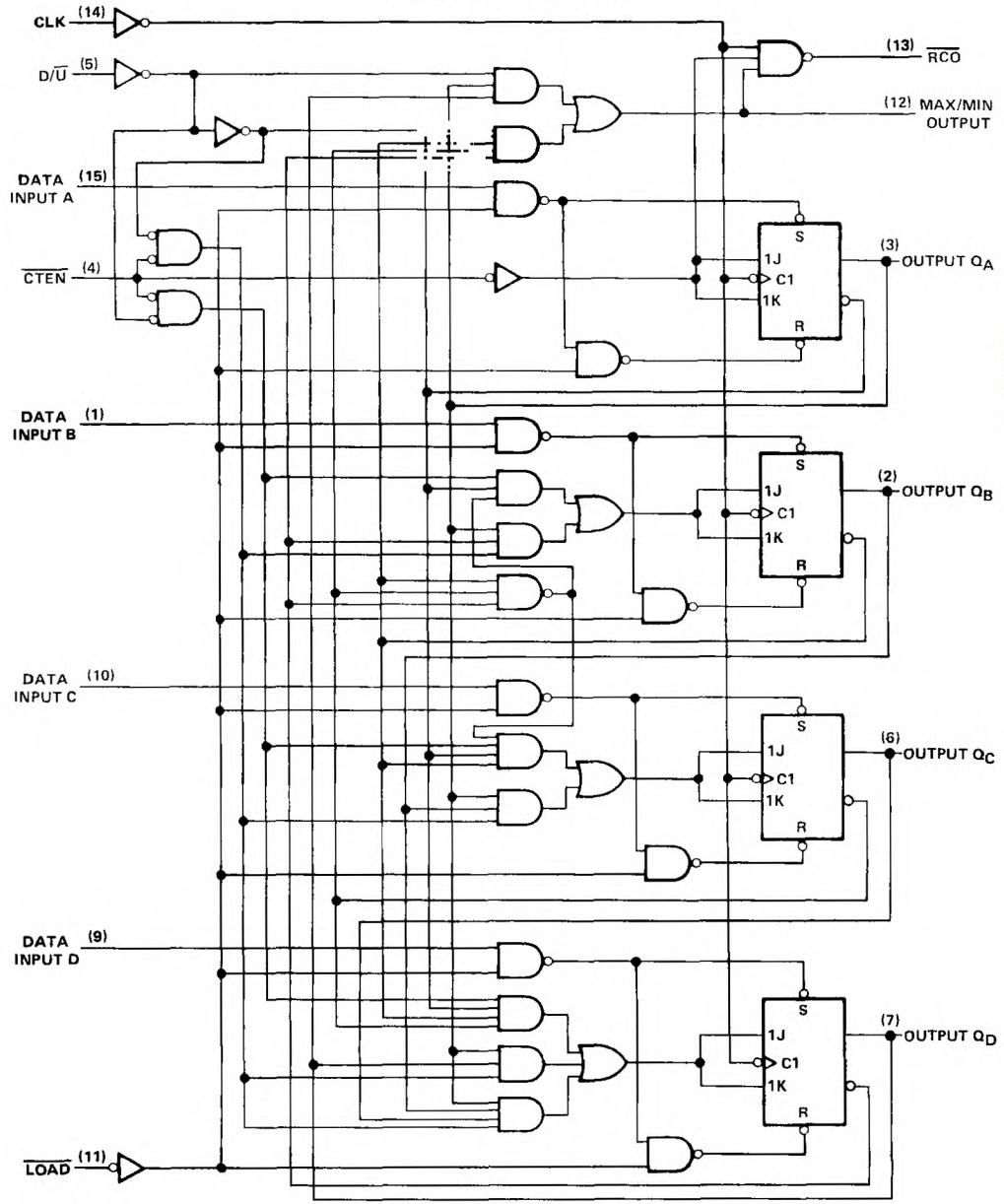

Pin numbers shown are for D, J, and N packages.

logic diagram (positive logic)

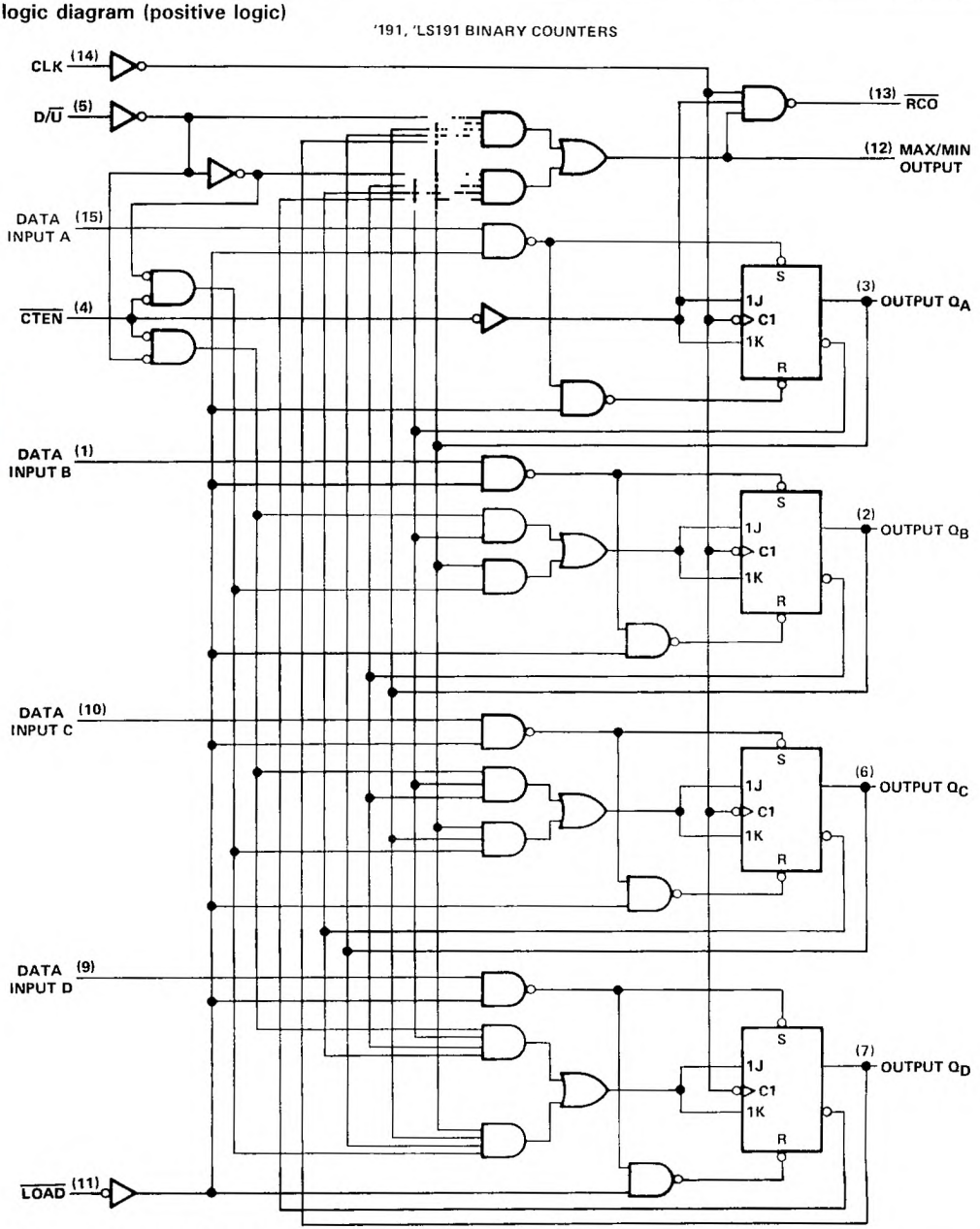

Pin numbers shown are for D, J, and N packages.

TEXAS INSTRUMENTS
POST OFFICE BOX 655012 • DALLAS, TEXAS 75265

'190, 'LS190 DECADE COUNTERS

typical load, count, and inhibit sequences

Illustrated below is the following sequence:

1. Load (preset) to BCD seven.
2. Count up to eight, nine (maximum), zero, one, and two.
3. Inhibit.
4. Count down to one, zero (minimum), nine, eight, and seven.

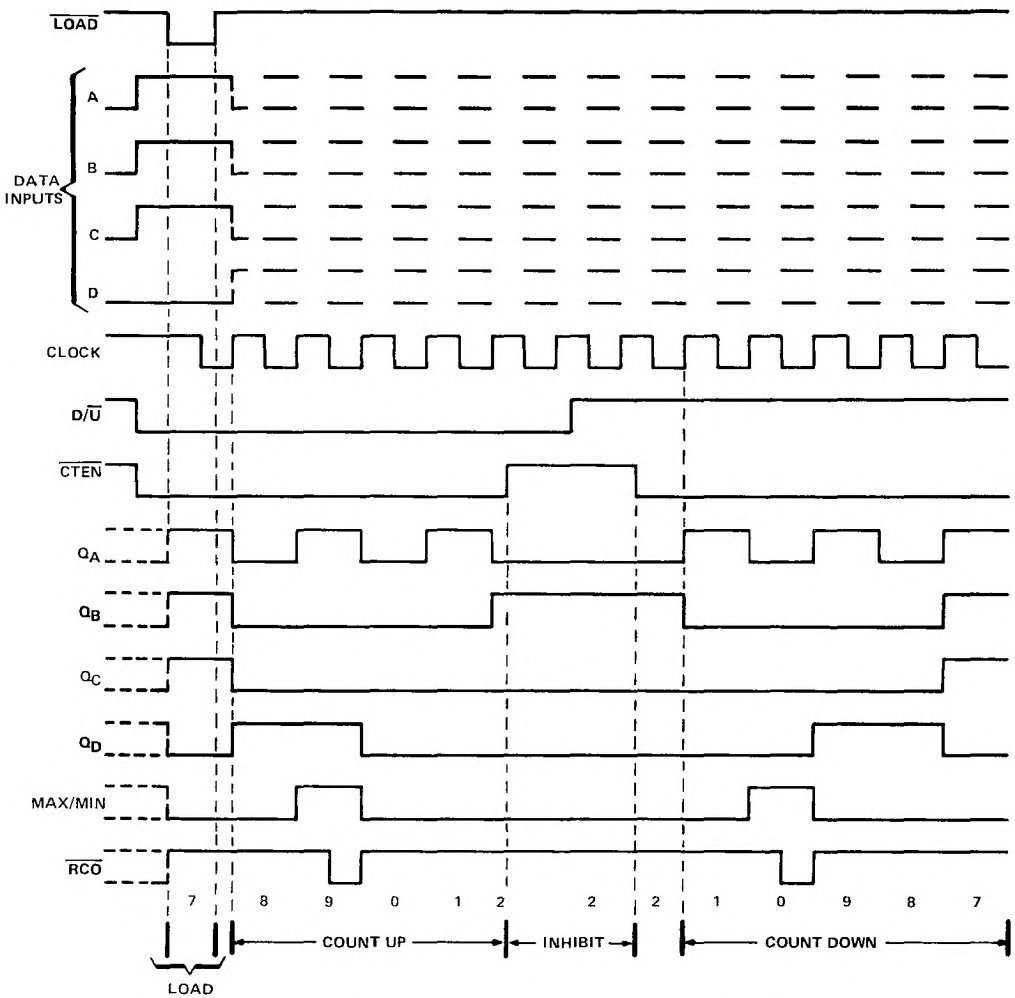

typical load, count, and inhibit sequences

Illustrated below is the following sequence:

1. Load (preset) to binary thirteen.
2. Count up to fourteen, fifteen (maximum), zero, one, and two.
3. Inhibit.
4. Count down to one, zero (minimum), fifteen, fourteen, and thirteen.

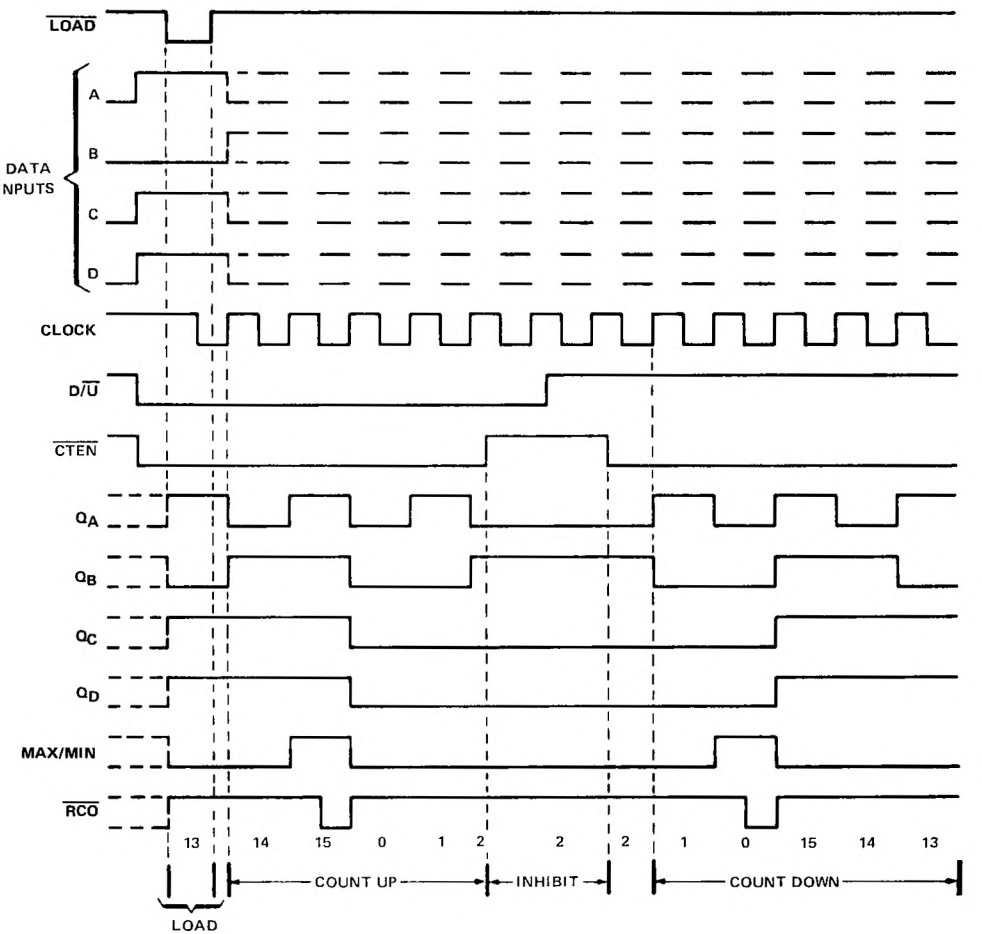

TEXAS INSTRUMENTS
POST OFFICE BOX 655012 • DALLAS, TEXAS 75265

absolute maximum ratings over operating free-air temperature range (unless otherwise noted)

Supply voltage, V_{CC} (see Note 1) . . . . . 7 V
Input voltage: SN54', SN74' Circuits . . . . . 5.5 V
SN54LS', SN74LS' Circuits . . . . . 7 V
Operating free-air temperature range: SN54', SN54LS' Circuits . . . . . −55°C to 125°C
SN74', SN74LS' Circuits . . . . . 0°C to 70°C
Storage temperature range . . . . . −65°C to 150°C

NOTE 1: Voltage values are with respect to network ground terminal.

recommended operating conditions

			SN54190, SN54191			SN74190, SN74191			UNIT
			MIN	NOM	MAX	MIN	NOM	MAX	
V_{CC}	Supply voltage		4.5	5	5.5	4.75	5	5.25	V
I_{OH}	High-level output current				−0.8			−0.8	mA
I_{OL}	Low-level output current				16			16	mA
f_{clock}	Input clock frequency		0		20	0		20	MHz
$t_{w(clock)}$	Width of clock input pulse		25			25			ns
$t_{w(load)}$	Width of load input pulse		35			35			ns
t_{su}	Setup time	Data, high or low (See Figure 1 and 2)	20			20			ns
		Load inactive state	20			20			
t_{hold}	Data hold time		0			0			ns
T_A	Operating free-air temperature		−55		125	0		70	°C

electrical characteristics over recommended operating free-air temperature range (unless otherwise noted)

PARAMETER		TEST CONDITIONS†	SN54190, SN54191			SN74190, SN74191			UNIT
			MIN	TYP‡	MAX	MIN	TYP‡	MAX	
V_{IH}	High-level input voltage	V_{CC} = MIN	2			2			V
V_{IL}	Low-level input voltage	V_{CC} = MIN			0.8			0.8	V
V_{IK}	Input clamp voltage	V_{CC} = MIN, I_I = −12 mA			−1.5			−1.5	V
V_{OH}	High-level output voltage	V_{CC} = MIN, V_{IH} = 2 V, V_{IL} = 0.8 V, I_{OH} = −0.8 mA	2.4	3.4		2.4	3.4		V
V_{OL}	Low-level output voltage	V_{CC} = MIN, V_{IH} = 2 V, V_{IL} = 0.8 V, I_{OL} = 16 mA		0.2	0.4		0.2	0.4	V
I_I	High-level input current at maximum input voltage	V_{CC} = MAX, V_I = 5.5 V			1			1	mA
I_{IH}	High-level input current at any input except enable	V_{CC} = MAX, V_I = 2.4 V			40			40	μA
I_{IH}	High-level input current at enable input				120			120	μA
I_{IL}	Low-level input current at any input except enable	V_{CC} = MAX, V_I = 0.4 V			−1.6			−1.6	mA
I_{IL}	Low-level input current at enable input				−4.8			−4.8	mA
I_{OS}	Short-circuit output current§	V_{CC} = MAX	−20		−65	−18		−65	mA
I_{CC}	Supply current	V_{CC} = MAX, See Note 2		65	99		65	105	mA

†For conditions shown as MAX or MIN, use appropriate value specified under recommended operating conditions.
‡All typical values are at V_{CC} = 5 V, T_A = 25°C.
§Not more than one output should be shorted at a time.
NOTE 2: I_{CC} is measured with all inputs grounded and all outputs open.

switching characteristics, V_{CC} = 5 V, T_A = 25°C

PARAMETER†	FROM (INPUT)	TO (OUTPUT)	TEST CONDITIONS	'190		'191		UNIT
				MIN	TYP	MIN	MAX	
f_{max}			C_L = 15 pF, R_L = 400 Ω, See Figures 1 and 3 thru 7	20	25			MHz
t_{PLH}	$\overline{Load}$	Q_A, Q_B, Q_C, Q_D			22		33	ns
t_{PHL}					33		50	
t_{PLH}	Data A, B, C, D	Q_A, Q_B, Q_C, Q_D			14		22	ns
t_{PHL}					35		50	
t_{PLH}	CLK	$\overline{RCO}$			13		20	ns
t_{PHL}					16		24	
t_{PLH}	CLK	Q_A, Q_B, Q_C, Q_D			16		24	ns
t_{PHL}					24		36	
t_{PLH}	CLK	Max/Min			28		42	ns
t_{PHL}					37		52	
t_{PLH}	D/$\overline{U}$	$\overline{RCO}$			30		45	ns
t_{PHL}					30		45	
t_{PLH}	D/$\overline{U}$	Max/Min			21		33	ns
t_{PHL}					22		33	

† f_{max} ≡ maximum clock frequency
t_{PLH} ≡ propagation delay time, low-to-high-level output
t_{PHL} ≡ propagation delay time, high-to-low-level output

schematics of inputs and outputs

EQUIVALENT OF EACH INPUT

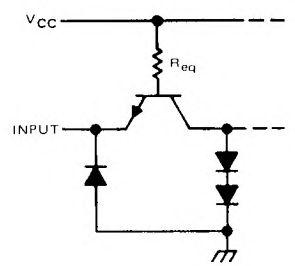

Enable input: R_{eq} = 1.3 kΩ NOM
All other inputs: R_{eq} = 4 kΩ NOM

TYPICAL OF ALL OUTPUTS

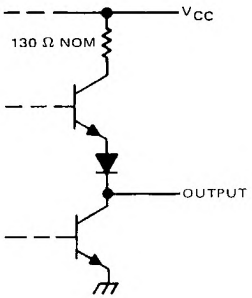

TEXAS INSTRUMENTS
POST OFFICE BOX 655012 • DALLAS, TEXAS 75265

recommended operating conditions

		SN54LS190 SN54LS191			SN74LS190 SN74LS191			UNIT
		MIN	NOM	MAX	MIN	NOM	MAX	
V_{CC}	Supply voltage	4.5	5	5.5	4.75	5	5.25	V
I_{OH}	High-level output current			−0.4			−0.4	mA
I_{OL}	Low-level output current			4			8	mA
f_{clock}	Clock frequency	0		20	0		20	MHz
$t_{w(clock)}$	Width of clock input pulse	25			25			ns
$t_{w(load)}$	Width of load input pulse	35			35			ns
t_{su}	Data setup time (See Figures 1 and 2)	20			20			ns
t_{su}	Load inactive state setup time	30			30			ns
t_h	Data hold time	5			5			ns
t_h	Enable hold time	0			0			ns
t_{enable}	Count enable time (see Note 3)	40			40			ns
T_A	Operating free-air temperature	−55		125	0		70	°C

electrical characteristics over recommended operating free-air temperature range (unless otherwise noted)

PARAMETER			TEST CONDITIONS†		SN54LS190 SN54LS191			SN74LS190 SN74LS191			UNIT
					MIN	TYP‡	MAX	MIN	TYP‡	MAX	
V_{IH}	High-level input voltage				2			2			V
V_{IL}	Low-level input voltage						0.7			0.8	V
V_{IK}	Input clamp voltage		V_{CC} = MIN, I_I = −18 mA				−1.5			−1.5	V
V_{OH}	High-level output voltage		V_{CC} = MIN, V_{IH} = 2 V, V_{IL} = V_{IL} max, I_{OH} = −400 μA		2.5	3.4		2.7	3.4		V
V_{OL}	Low-level output voltage		V_{CC} = MIN, V_{IH} = 2 V, V_{IL} = V_{IL} max	I_{OL} = 4 mA		0.25	0.4		0.25	0.4	V
				I_{OL} = 8 mA					0.35	0.5	
I_I	High-level input current at maximum input voltage	Enable	V_{CC} = MAX, V_I = 7 V				0.3			0.3	mA
		Others					0.1			0.1	
I_{IH}	High-level input current	Enable	V_{CC} = MAX, V_I = 2.7 V				60			60	μA
		Others					20			20	
I_{IL}	Low-level input current	Enable	V_{CC} = MAX, V_I = 0.4 V				−1.2			−1.2	mA
		Others					−0.4			−0.4	
I_{OS}	Short-circuit output current§		V_{CC} = MAX,		−20		−100	−20		−100	mA
I_{CC}	Supply current		V_{CC} = MAX, See Note 2			20	35		20	35	mA

†For conditions shown as MAX or MIN, use appropriate value specified under recommended operating conditions for the applicable device type.

‡All typical values are at V_{CC} = 5 V, T_A = 25°C.

§Not more than one output should be shorted at a time, and duration of the short-circuit should not exceed one second.

NOTES: 2. I_{CC} is measured with all inputs grounded and all outputs open.

3. Minimum count enable time is the interval immediately preceeding the rising edge of the clock pulse during which interval the count enable input must be low to ensure counting.

switching characteristics, V_{CC} = 5 V, T_A = 25°C

PARAMETER†	FROM (INPUT)	TO (OUTPUT)	TEST CONDITIONS	'LS190, 'LS191 MIN	TYP	MAX	UNIT
f_{max}			C_L = 15 pF, R_L = 2 kΩ, See Figures 1 and 3 thru 7	20	25		MHz
t_{PLH}	$\overline{Load}$	Q_A, Q_B, Q_C, Q_D			22	33	ns
t_{PHL}					33	50	
t_{PLH}	Data A, B, C, D	Q_A, Q_B, Q_C, Q_D			20	32	ns
t_{PHL}					27	40	
t_{PLH}	CLK	$\overline{RCO}$			13	20	ns
t_{PHL}					16	24	
t_{PLH}	CLK	Q_A, Q_B, Q_C, Q_D			16	24	ns
t_{PHL}					24	36	
t_{PLH}	CLK	Max/Min			28	42	ns
t_{PHL}					37	52	
t_{PLH}	D/$\overline{U}$	$\overline{RCO}$			30	45	ns
t_{PHL}					30	45	
t_{PLH}	D/$\overline{U}$	Max/Min			21	33	ns
t_{PHL}					22	33	
t_{PLH}	$\overline{CTEN}$	$\overline{RCO}$			21	33	ns
t_{PHL}					22	33	

† f_{max} = maximum clock frequency
t_{PLH} = propagation delay time, low-to-high-level output
t_{PHL} = propagation delay time, high-to-low-level output

schematics of inputs and outputs

EQUIVALENT OF EACH INPUT

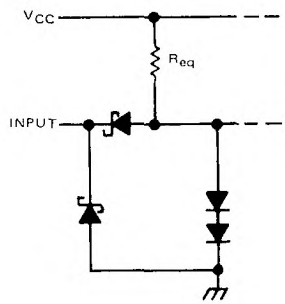

Enable input: R_{eq} = 8.33 kΩ NOM
Load input: R_{eq} = 25 kΩ NOM
All other inputs: R_{eq} = 17 kΩ NOM

TYPICAL OF ALL OUTPUTS

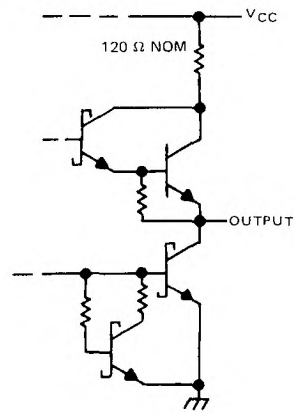

TEXAS INSTRUMENTS
POST OFFICE BOX 655012 • DALLAS, TEXAS 75265

PARAMETER MEASUREMENT INFORMATION

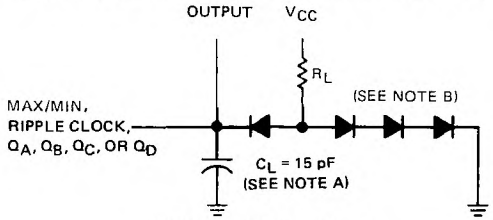

FIGURE 1–LOAD CIRCUIT
FOR SWITCHING TIME MEASUREMENT

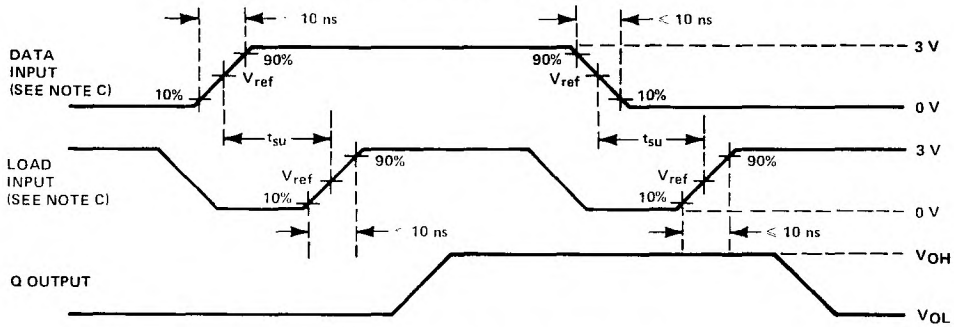

FIGUTE 2-DATA SETUP TIME VOLTAGE WAVEFORMS

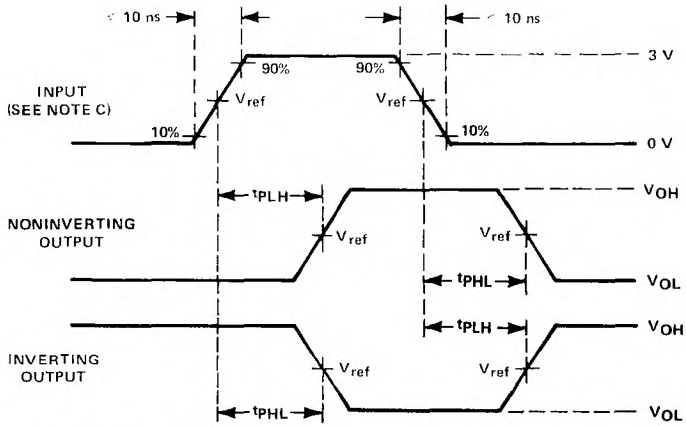

See waveform sequences in figures 4 through 7 for propagation times from a specific input to a specific output. For simplication, pulse rise times, reference levels, etc., have not been shown in figures 4 through 7.

FIGURE 3-GENERAL VOLTAGE WAVEFORMS FOR PROPAGATION TIMES

NOTES: A. C_L includes probe and jig capacitance.
B. All diodes are 1N3064 or equivalent.
C. The input pulses are supplied by generators having the following characteristics: Z_{out} = 50 Ω, duty cycle ≤ 50%, PRR ≤ 1 MHz.
D. V_{ref} = 1.5 V for '190 and '191; 1.3 V for 'LS190 and 'LS191.

PARAMETER MEASUREMENT INFORMATION (continued)

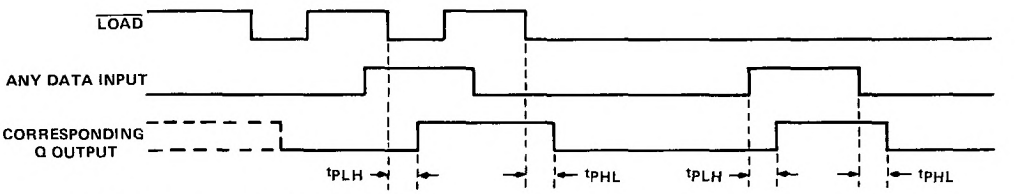

NOTE E: Conditions on other inputs are irrelevant.

FIGURE 4–LOAD TO OUTPUT AND DATA TO OUTPUT

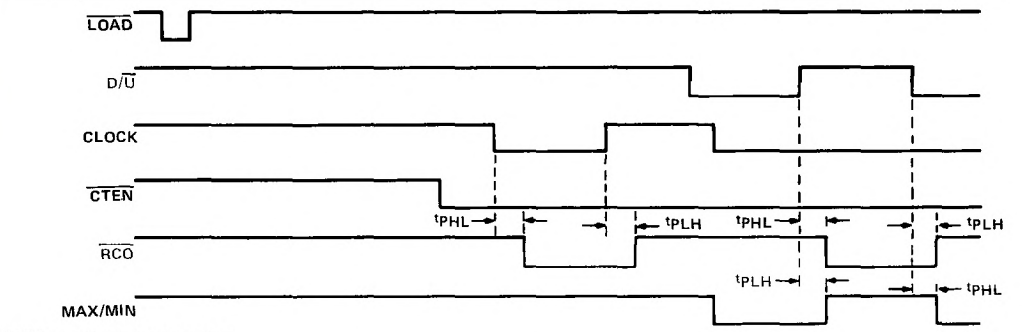

NOTE F: All data inputs are low.

FIGURE 5–ENABLE TO RIPPLE CLOCK, CLOCK TO RIPPLE CLOCK, DOWN/UP TO RIPPLE CLOCK, AND DOWN/UP TO MAX/MIN

TEXAS INSTRUMENTS
POST OFFICE BOX 655012 • DALLAS, TEXAS 75265

PARAMETER MEASUREMENT INFORMATION (continued)

switching characteristics (continued)

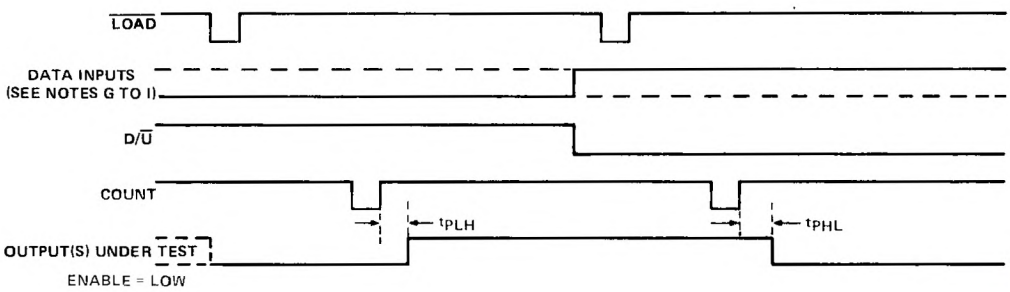

NOTES: G. To test Q_A, Q_B, and Q_C outputs of '190 and 'LS190: Data inputs A, B, and C are shown by the solid line. Data input D is shown by the dashed line.
H. To test Q_D output of '190 and 'LS190: Data inputs A and D are shown by the solid line. Data inputs B and C are held at the low logic level.
I. To test Q_A, Q_B, Q_C, and Q_D outputs of '191 and 'LS191: All four data inputs are shown by the solid line.

FIGURE 6-CLOCK TO OUTPUT

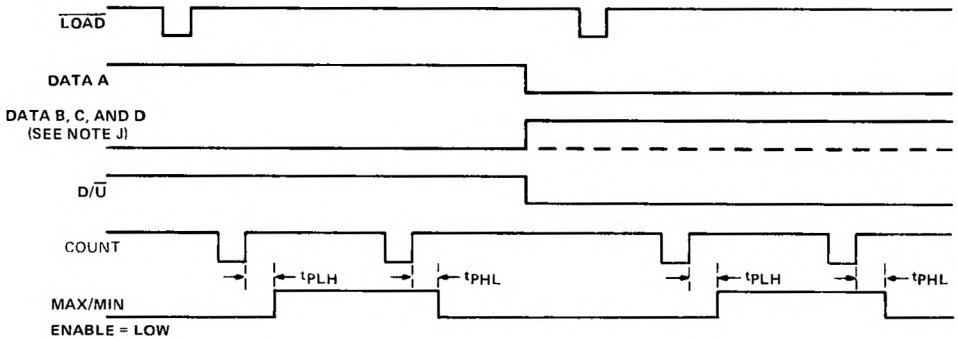

NOTE J: Data inputs B and C are shown by the dashed line for the '190 and 'LS190 and the solid line for the '191 and 'LS191: Data input D is shown by the solid line for both devices.

FIGURE 7-CLOCK TO MAX/MIN

- Cascading Circuitry Provided Internally
- Synchronous Operation
- Individual Preset to Each Flip-Flop
- Fully Independent Clear Input

TYPES	TYPICAL MAXIMUM COUNT FREQUENCY	TYPICAL POWER DISSIPATION
'192, '193	32 MHz	325 mW
'LS192, 'LS193	32 MHz	95 mW

SN54192, SN54193, SN54LS192,
SN54LS193 . . . J OR W PACKAGE
SN74192, SN74193 . . . N PACKAGE
SN74LS192, SN74LS193 . . . D OR N PACKAGE
(TOP VIEW)

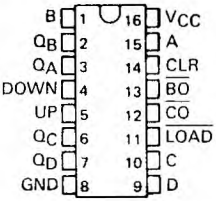

SN54LS192, SN54LS193 . . . FK PACKAGE
(TOP VIEW)

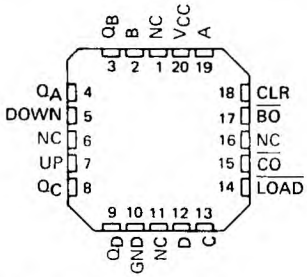

NC - No internal connection

description

These monolithic circuits are synchronous reversible (up/down) counters having a complexity of 55 equivalent gates. The '192 and 'LS192 circuits are BCD counters and the '193 and 'LS193 are 4-bit binary counters. Synchronous operation is provided by having all flip-flops clocked simultaneously so that the outputs change coincidently with each other when so instructed by the steering logic. This mode of operation eliminates the output counting spikes which are normally associated with asynchronous (ripple-clock) counters.

The outputs of the four master-slave flip-flops are triggered by a low-to-high-level transition of either count (clock) input. The direction of counting is determined by which count input is pulsed while the other count input is high.

All four counters are fully programmable; that is, each output may be preset to either level by entering the desired data at the data inputs while the load input is low. The output will change to agree with the data inputs independently of the count pulses. This feature allows the counters to be used as modulo-N dividers by simply modifying the count length with the preset inputs.

A clear input has been provided which forces all outputs to the low level when a high level is applied. The clear function is independent of the count and load inputs. The clear, count, and load inputs are buffered to lower the drive requirements. This reduces the number of clock drivers, etc., required for long words.

These counters were designed to be cascaded without the need for external circuitry. Both borrow and carry outputs are available to cascade both the up- and down-counting functions. The borrow output produces a pulse equal in width to the count-down input when the counter underflows. Similarly, the carry output produces a pulse equal in width to the count-up input when an overflow condition exists. The counters can then be easily cascaded by feeding the borrow and carry outputs to the count-down and count-up inputs respectively of the succeeding counter.

absolute maximum ratings over operating free-air temperature range (unless otherwise noted)

	SN54'	SN54LS'	SN74'	SN74LS'	UNIT
Supply voltage, V_{CC} (see Note 1)	7	7	7	7	V
Input voltage	5.5	7	5.5	7	V
Operating free-air temperature range	−55 to 125		0 to 70		°C
Storage temperature range	−65 to 150		−65 to 150		°C

NOTE 1: Voltage values are with respect to network ground terminal.

PRODUCTION DATA documents contain information current as of publication date. Products conform to specifications per the terms of Texas Instruments standard warranty. Production processing does not necessarily include testing of all parameters.

logic diagram (positive logic)

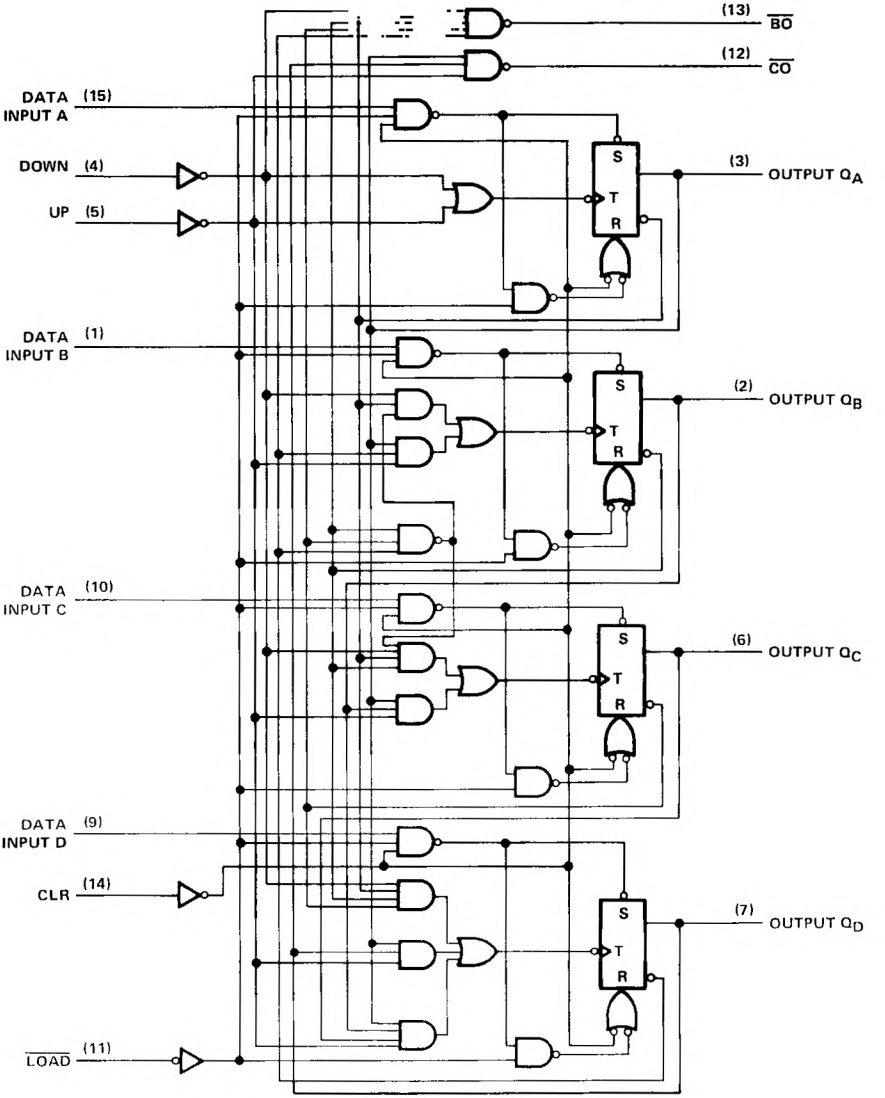

Pin numbers shown are for D, J, N, and W packages.

TEXAS INSTRUMENTS
POST OFFICE BOX 655012 • DALLAS, TEXAS 75265

logic diagram (positive logic)

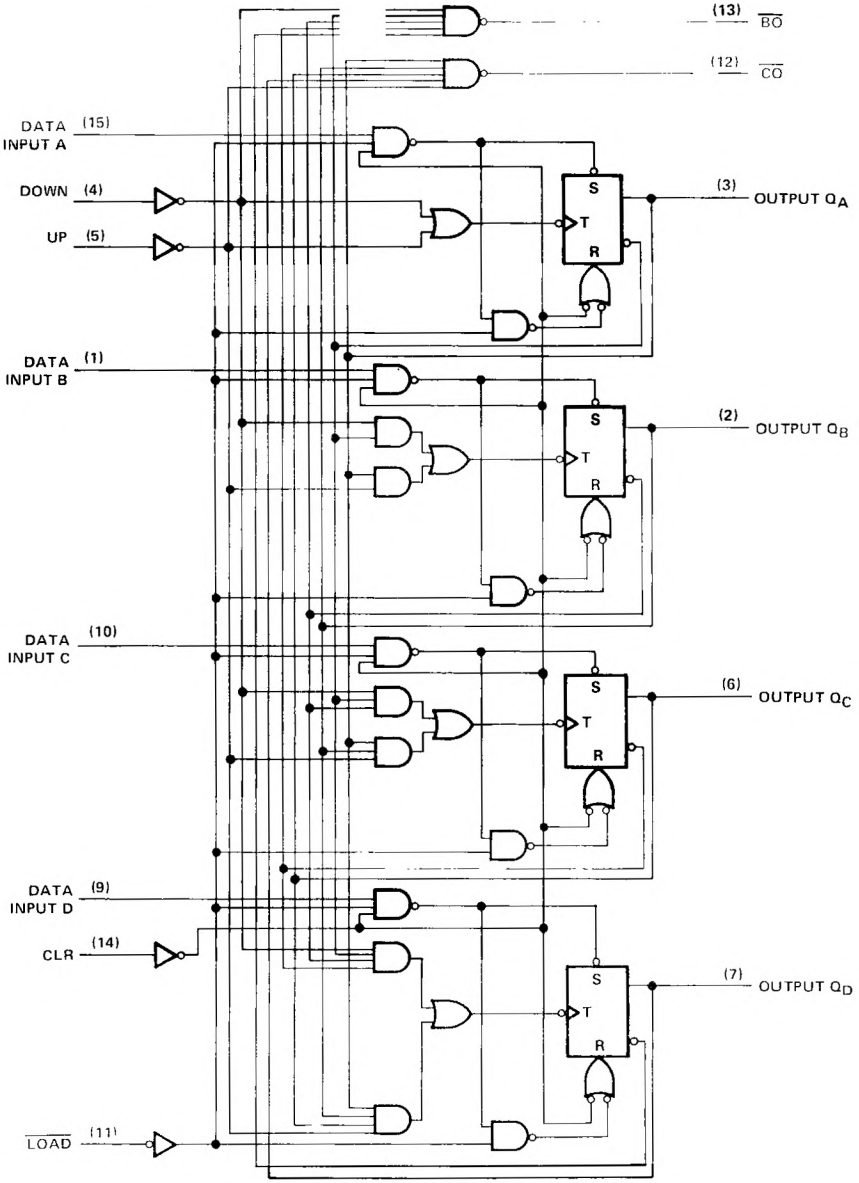

Pin numbers shown are for D, J, N, and W packages.

logic symbols†

'192

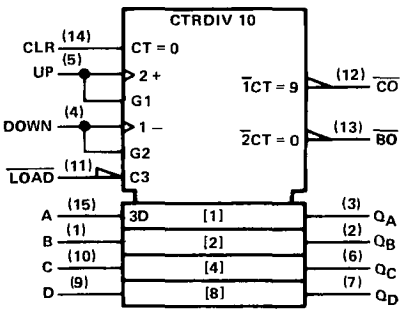

'193

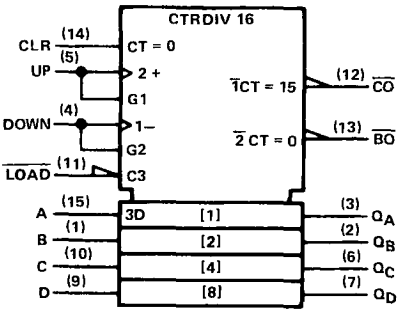

†These symbols are in accordance with ANSI/IEEE Std. 91-1984 and IEC Publication 617-12.
Pin numbers shown are for D, J, N, and W packages.

schematics of inputs and outputs

EQUIVALENT OF INPUTS
OF '192, '193

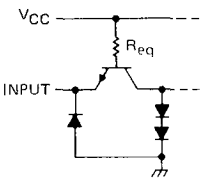

'192, '193: R_{eq} = 4 kΩ NOM

TYPICAL OF OUTPUTS
OF '192, '193

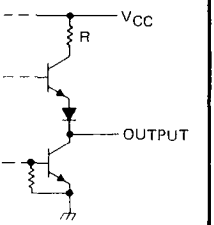

'192, '193: R = 130 Ω NOM

EQUIVALENT OF INPUTS
OF 'LS192, 'LS193

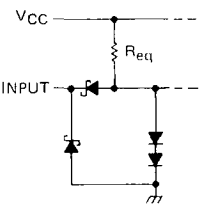

Load input: R_{eq} = 25 kΩ NOM
All other inputs: R_{eq} = 17 kΩ NOM

TYPICAL OF OUTPUTS
OF 'LS192, 'LS193

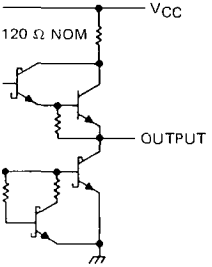

TEXAS INSTRUMENTS
POST OFFICE BOX 655012 • DALLAS, TEXAS 75265

'192, 'LS192 DECADE COUNTERS

typical clear, load, and count sequences

Illustrated below is the following sequence:

1. Clear outputs to zero.
2. Load (preset) to BCD seven.
3. Count up to eight, nine, carry, zero, one, and two.
4. Count down to one, zero, borrow, nine, eight, and seven.

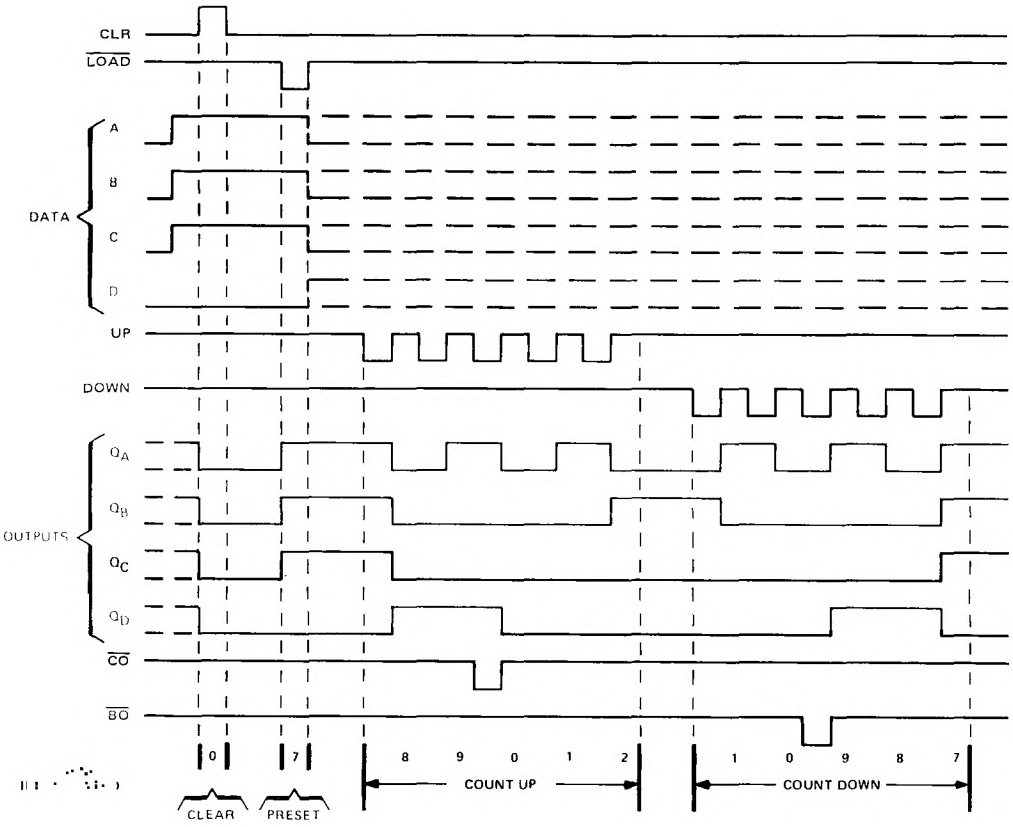

NOTES: A. Clear overrides load, data, and count inputs.
B. When counting up, count-down input must be high, when counting down, count-up input must be high.

typical clear, load, and count sequences

Illustrated below is the following sequence:

1. Clear outputs to zero.
2. Load (preset) to binary thirteen.
3. Count up to fourteen, fifteen, carry, zero, one, and two.
4. Count down to one, zero, borrow, fifteen, fourteen, and thirteen.

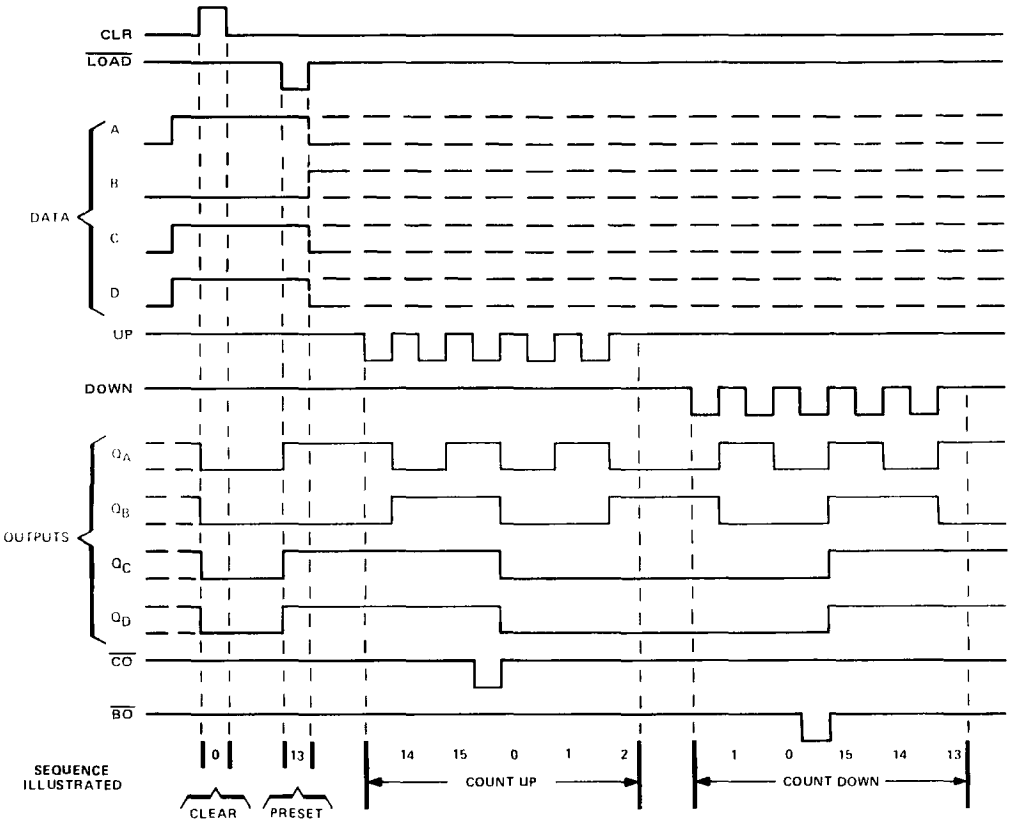

NOTES: A. Clear overrides load, data, and count inputs.

B When counting up, count-down input must be high; when counting down, count-up input must be high.

recommended operating conditions

			SN54192 SN54193			SN74192 SN74193			UNIT
			MIN	NOM	MAX	MIN	NOM	MAX	
V_{CC}	Supply voltage		4.5	5	5.5	4.75	5	5.25	V
I_{OH}	High-level output current				−0.4			−0.4	mA
I_{OL}	Low-level output current				16			16	mA
f_{clock}	Clock frequency		0		25	0		25	MHz
t_w	Width of any input pulse		20			20			ns
t_{su}	Data setup time, (see Figure 1)		20			20			ns
t_h	Hold time	Data, high or low	0			0			ns
		$\overline{LOAD}$	3			3			
T_A	Operating free-air temperature		−55		125	0		70	°C

electrical characteristics over recommended operating free-air temperature range (unless otherwise noted)

PARAMETER		TEST CONDITIONS†	SN54192 SN54193			SN74192 SN74193			UNIT
			MIN	TYP‡	MAX	MIN	TYP‡	MAX	
V_{IH}	High-level input voltage		2			2			V
V_{IL}	Low-level input voltage				0.8			0.8	V
V_{IK}	Input clamp voltage	V_{CC} = MIN, I_I = −12 mA			−1.5			−1.5	V
V_{OH}	High-level output voltage	V_{CC} = MIN, V_{IH} = 2 V, V_{IL} = 0.8 V, I_{OH} = −0.4 mA	2.4	3.4		2.4	3.4		V
V_{OL}	Low-level output voltage	V_{CC} = MIN, V_{IH} = 2 V, V_{IL} = 0.8 V, I_{OL} = 16 mA		0.2	0.4		0.2	0.4	V
I_I	Input current at maximum input voltage	V_{CC} = MAX, V_I = 5.5 V			1			1	mA
I_{IH}	High-level input current	V_{CC} = MAX, V_I = 2.4 V			40			40	μA
I_{IL}	Low-level input current	V_{CC} = MAX, V_I = 0.4 V			−1.6			−1.6	mA
I_{OS}	Short-circuit output current§	V_{CC} = MAX	−20		−65	−18		−65	mA
I_{CC}	Supply current	V_{CC} = MAX, See Note 2		65	89		65	102	mA

†For conditions shown as MIN or MAX, use the appropriate value specified under recommended operating conditions for the applicable type.
‡All typical values are at V_{CC} = 5 V, T_A = 25°C.
§Not more than one output should be shorted at a time.
NOTE 2: I_{CC} is measured with all outputs open, clear and load inputs grounded, and all other inputs at 4.5 V.

switching characteristics, V_{CC} = 5 V, T_A = 25°C

PARAMETER¶	FROM INPUT	TO OUTPUT	TEST CONDITIONS	MIN	TYP	MAX	UNIT
f_{max}			C_L = 15 pF, R_L = 400 Ω, See Figures 1 and 2	25	32		MHz
t_{PLH}	UP	$\overline{CO}$			17	26	ns
t_{PHL}					16	24	
t_{PLH}	DOWN	$\overline{BO}$			16	24	ns
t_{PHL}					16	24	
t_{PLH}	UP OR DOWN	Q			25	38	ns
t_{PHL}					31	47	
t_{PLH}	$\overline{LOAD}$	Q			27	40	ns
t_{PHL}					29	40	
t_{PHL}	CLR	Q			22	35	ns

¶f_{max} = maximum clock frequency
t_{PLH} = propagation delay time, low-to-high-level output
t_{PHL} = propagation delay time, high-to-low-level output

recommended operating conditions

		SN54LS192 SN54LS193			SN74LS192 SN74LS193			UNIT
		MIN	NOM	MAX	MIN	NOM	MAX	
V_{CC}	Supply voltage	4.5	5	5.5	4.75	5	5.25	V
I_{OH}	High-level output current			−400			−400	μA
I_{OL}	Low-level output current			4			8	mA
f_{clock}	Clock frequency	0		25	0		25	MHz
t_w	Width of any input pulse	20			20			ns
t_{su}	Clear inactive-state setup time	15			15			ns
	Load inactive-state setup time	15			15			ns
	Data setup time (see Figure 1)	20			20			ns
t_h	Data hold time	5			5			ns
T_A	Operating free-air temperature range	−55		125	0		70	°C

electrical characteristics over recommended operating free-air temperature range (unless otherwise noted)

PARAMETER		TEST CONDITIONS†		SN54LS192 SN54LS193			SN74LS192 SN74LS193			UNIT
				MIN	TYP‡	MAX	MIN	TYP‡	MAX	
V_{IH}	High-level input voltage			2			2			V
V_{IL}	Low-level input voltage					0.7			0.8	V
V_{IK}	Input clamp voltage	V_{CC} = MIN, I_I = −18 mA				−1.5			−1.5	V
V_{OH}	High-level output voltage	V_{CC} = MIN, V_{IH} = 2 V, V_{IL} = V_{IL} max, I_{OH} = −400 μA		2.5	3.4		2.7	3.4		V
V_{OL}	Low-level output voltage	V_{CC} = MIN, V_{IH} = 2 V, V_{IL} = V_{IL} max	I_{OL} = 4 mA		0.25	0.4		0.15	0.4	V
			I_{OL} = 8 mA					0.35	0.5	
I_I	Input current at maximum input voltage	V_{CC} = MAX, V_I = 7 V				0.1			0.1	mA
I_{IH}	High-level input current	V_{CC} = MAX, V_I = 2.7 V				20			20	μA
I_{IL}	Low-level input current	V_{CC} = MAX, V_I = 0.4 V				−0.4			−0.4	mA
I_{OS}	Short-circuit output current§	V_{CC} = MAX		−20		−100	−20		−100	mA
I_{CC}	Supply current	V_{CC} = MAX, See Note 2			19	34		19	34	mA

†For conditions shown as MIN or MAX, use the appropriate value specified under recommended operating conditions for the applicable type.
‡All typical values are at V_{CC} = 5 V, T_A = 25°C.
§Not more than one output should be shorted at a time ,and duration of the short-circuit should not exceed one second.
NOTE 2: I_{CC} is measured with all outputs open, clear and load inputs grounded, and all other inputs at 4.5 V.

switching characteristics, V_{CC} = 5 V, T_A = 25°C

PARAMETER	FROM INPUT	TO OUTPUT	TEST CONDITIONS	MIN	TYP	MAX	UNIT
f_{max}			C_L = 15 pF, R_L = 2 kΩ, See Figures 1 and 2	25	32		MHz
t_{PLH}	UP	$\overline{CO}$			17	26	ns
t_{PHL}					18	24	
t_{PLH}	DOWN	$\overline{BO}$			16	24	ns
t_{PHL}					15	24	
t_{PLH}	UP OR DOWN	Q			27	38	ns
t_{PHL}					30	47	
t_{PLH}	$\overline{LOAD}$	Q			24	40	ns
t_{PHL}					25	40	
t_{PHL}	CLR	Q			23	35	ns

TEXAS INSTRUMENTS
POST OFFICE BOX 655012 • DALLAS, TEXAS 75265

PARAMETER MEASUREMENT INFORMATION

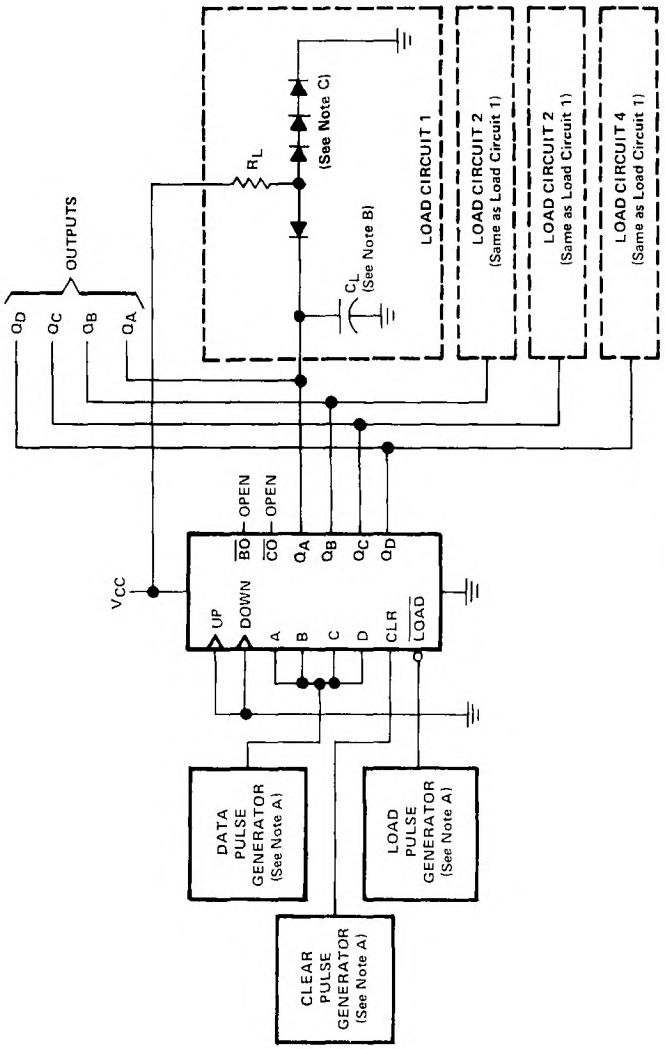

TEST CIRCUIT

NOTES: A. The pulse generators have the following characteristics: $Z_{out} \approx 50\ \Omega$ and for the data pulse generator PRR $\leq$ 500 kHz, duty cycle = 50%; for the load pulse generator PRR is two times data PRR, duty cycle = 50%
B. C_L includes probe and jig capacitance.
C. Diodes are 1N3064 or equivalent.
D. t_r and $t_f \leq 7$ ns.
E. V_{ref} is 1.5 V for '192 and '193, 1.3 V for 'LS192 and 'LS193.

FIGURE 1A – CLEAR, SETUP AND LOAD TIMES

PARAMETER MEASUREMENT INFORMATION

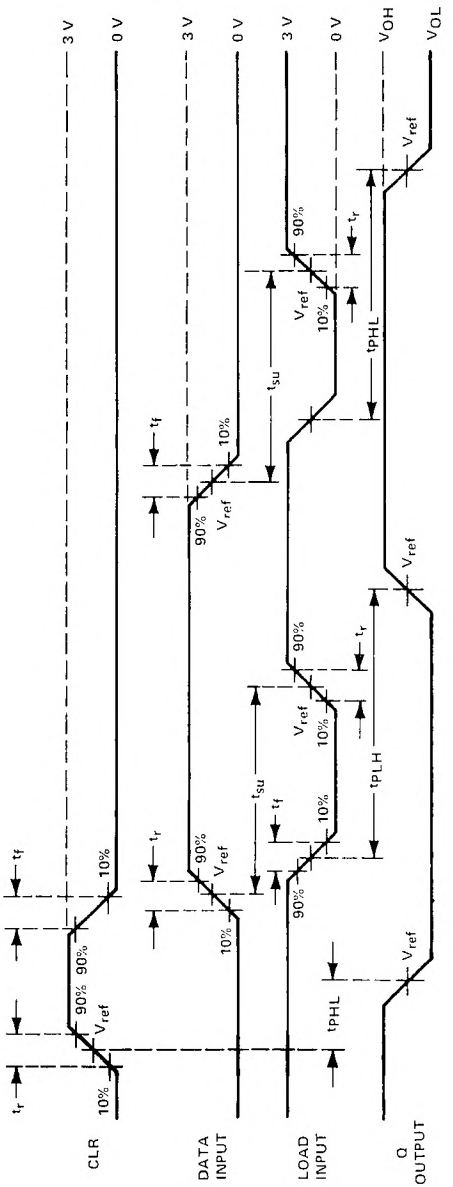

VOLTAGE WAVEFORMS

NOTES: A. The pulse generators have the following characteristics: $Z_{out} \approx 50\ \Omega$ and for the data pulse generator PRR ≤ 500 kHz, duty cycle = 50%; for the load pulse generator PRR is two times data PRR, duty cycle = 50%.
B. C_L includes probe and jig capacitance.
C. Diodes are 1N3064 or equivalent.
D. t_r and $t_f \leq 7$ ns.
E. V_{ref} is 1.5 V for '192 and '193, 1.3 V for 'LS192 and 'LS193.

FIGURE 1B — CLEAR, SETUP, AND LOAD TIMES

PARAMETER MEASUREMENT INFORMATION

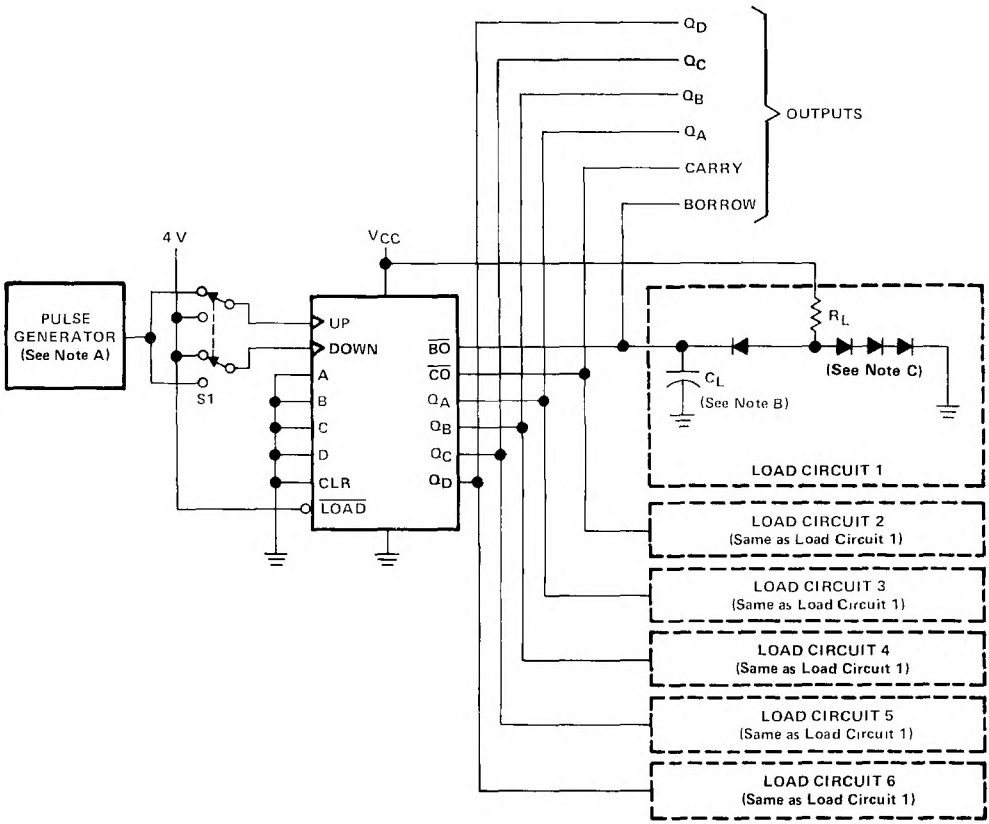

TEST CIRCUIT

NOTES: A. The pulse generators have the following characteristics: PRR ≈ 1 MHz, Z_{out} ≈ 50 Ω, duty cycle = 50%.
B. C_L includes probe and jig capacitance.
C. Diodes are 1N3064 or equivalent.
D. Cout-up and dount-down pulse shown are for the '193 and 'LS193 binary counters. Count cycle for '192 and 'LS192 decade counters is 1 through 10.
E. Waveforms for outputs Q_A, Q_B, and Q_C are omitted to simplify the drawing.
F. t_r and $t_f \leq 7$ ns.
G. V_{ref} is 1.5 V for '192 and '193, 1.3 V for 'LS192 and 'LS193.

FIGURE 2A – PROPAGATION DELAY TIMES

PARAMETER MEASUREMENT INFORMATION

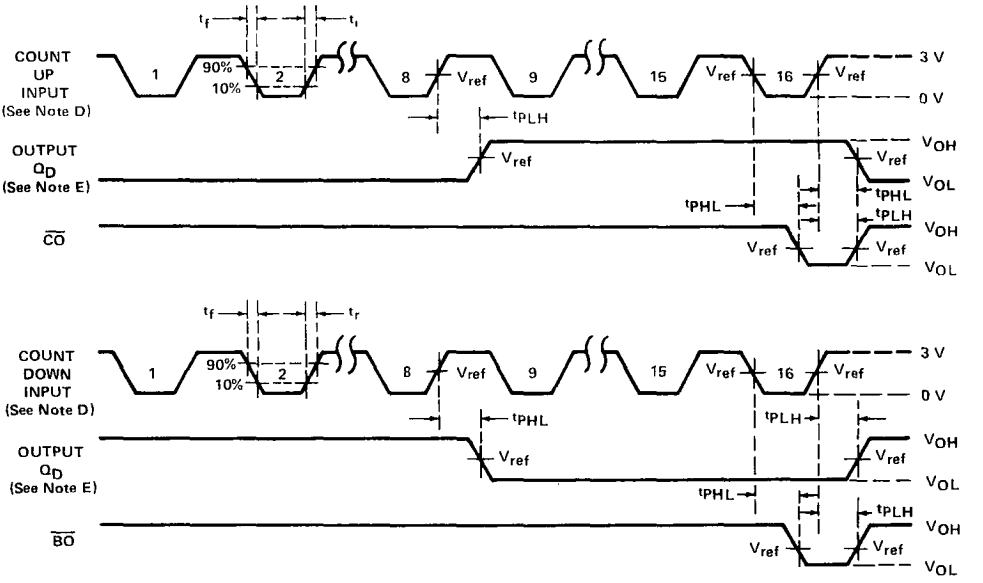

VOLTAGE WAVEFORMS

NOTES: A. The pulse generators have the following characteristics: PRR ≈ 1 MHz, Z_{out} ≈ 50 Ω, duty cycle ≈ 50%.
B. C_L includes probe and jig capacitance.
C. Diodes are 1N3064 or equivalent.
D. Cout-up and dount-down pulse shown are for the '193 and 'LS193 binary counters. Count cycle for '192 and 'LS192 decade counters is 1 through 10.
E. Waveforms for outputs Q_A, Q_B, and Q_C are omitted to simplify the drawing.
F. t_r and t_f ≤ 7 ns.
G. V_{ref} is 1.5 V for '192 and '193, 1.3 V for 'LS192 and 'LS193.

FIGURE 2B – PROPAGATION DELAY TIMES

TEXAS INSTRUMENTS
POST OFFICE BOX 655012 • DALLAS, TEXAS 75265

- Parallel Inputs and Outputs
- Four Operating Modes:
  - Synchronous Parallel Load
  - Right Shift
  - Left Shift
  - Do Nothing
- Positive Edge-Triggered Clocking
- Direct Overriding Clear

TYPE	TYPICAL MAXIMUM CLOCK FREQUENCY	TYPICAL POWER DISSIPATION
'194	36 MHz	195 mW
'LS194A	36 MHz	75 mW
'S194	105 MHz	425 mW

SN54194, SN54LS194A, SN54S194 . . . J OR W PACKAGE
SN74194 . . . N PACKAGE
SN74LS194A, SN74S194 . . . D OR N PACKAGE
(TOP VIEW)

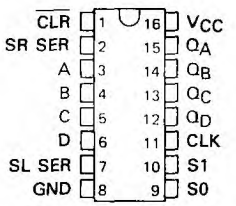

SN54LS194A, SN54S194 . . . FK PACKAGE
(TOP VIEW)

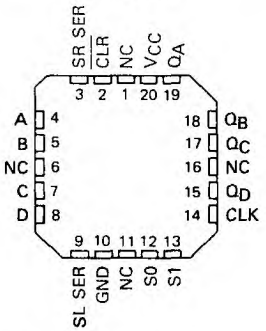

NC – No internal connection

description

These bidirectional shift registers are designed to incorporate virtually all of the features a system designer may want in a shift register. The circuit contains 46 equivalent gates and features parallel inputs, parallel outputs, right-shift and left-shift serial inputs, operating-mode-control inputs, and a direct overriding clear line. The register has four distinct modes of operation, namely:

Inhibit clock (do nothing)
Shift right (in the direction Q_A toward Q_D)
Shift left (in the direction Q_D toward Q_A)
Parallel (broadside) load

Synchronous parallel loading is accomplished by applying the four bits of data and taking both mode control inputs, S0 and S1, high. The data are loaded into the associated flip-flops and appear at the outputs after the positive transition of the clock input. During loading, serial data flow is inhibited.

Shift right is accomplished synchronously with the rising edge of the clock pulse when S0 is high and S1 is low. Serial data for this mode is entered at the shift-right data input. When S0 is low and S1 is high, data shifts left synchronously and new data is entered at the shift-left serial input.

Clocking of the shift register is inhibited when both mode control inputs are low. The mode controls of the SN54194/SN74194 should be changed only while the clock input is high.

logic symbol†

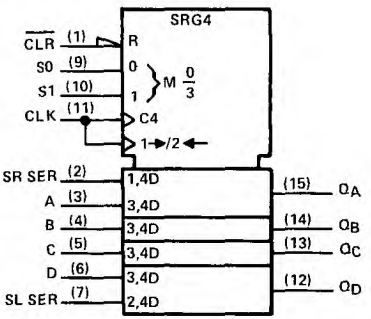

†This symbol is in accordance with ANSI/IEEE Std. 91-1984 and IEC Publication 617-12.
Pin numbers shown are for D, J, N, and W packages.

PRODUCTION DATA documents contain information current as of publication date. Products conform to specifications per the terms of Texas Instruments standard warranty. Production processing does not necessarily include testing of all parameters.

FUNCTION TABLE

INPUTS										OUTPUTS			
CLEAR	MODE		CLOCK	SERIAL		PARALLEL				Q_A	Q_B	Q_C	Q_D
	S1	S0		LEFT	RIGHT	A	B	C	D				
L	X	X	X	X	X	X	X	X	X	L	L	L	L
H	X	X	L	X	X	X	X	X	X	Q_{A0}	Q_{B0}	Q_{C0}	Q_{D0}
H	H	H	↑	X	X	a	b	c	d	a	b	c	d
H	L	H	↑	X	H	X	X	X	X	H	Q_{An}	Q_{Bn}	Q_{Cn}
H	L	H	↑	X	L	X	X	X	X	L	Q_{An}	Q_{Bn}	Q_{Cn}
H	H	L	↑	H	X	X	X	X	X	Q_{Bn}	Q_{Cn}	Q_{Dn}	H
H	H	L	↑	L	X	X	X	X	X	Q_{Bn}	Q_{Cn}	Q_{Dn}	L
H	L	L	X	X	X	X	X	X	X	Q_{A0}	Q_{B0}	Q_{C0}	Q_{D0}

H = high level (steady state)
L = low level (steady state)
X = irrelevant (any input, including transitions)
↑ = transition from low to high level
a, b, c, d = the level of steady-state input at inputs A, B, C, or D, respectively.
Q_{A0}, Q_{B0}, Q_{C0}, Q_{D0} = the level of Q_A, Q_B, Q_C, or Q_D, respectively, before the indicated steady-state input conditions were established.
Q_{An}, Q_{Bn}, Q_{Cn}, Q_{Dn} = the level of Q_A, Q_B, Q_C, respectively, before the most recent ↑ transition of the clock.

schematics of inputs and outputs

'194

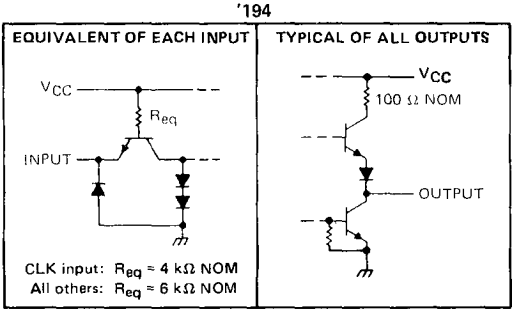

'LS194A

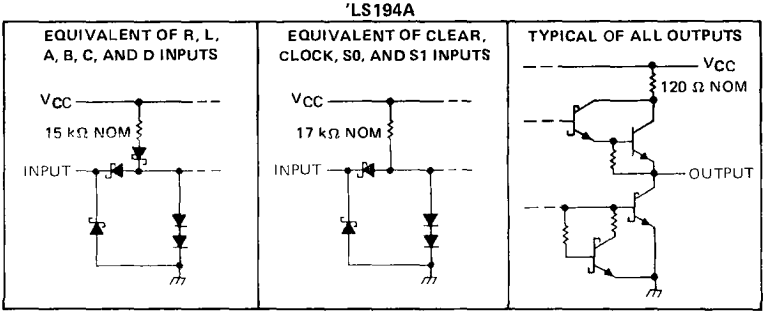

'S194

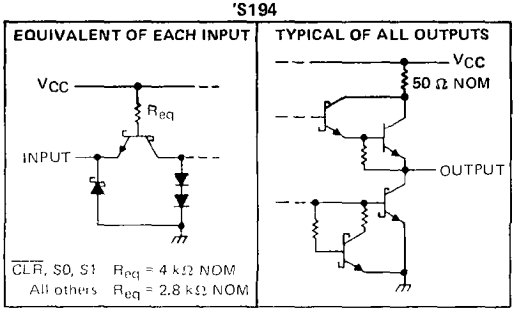

TEXAS INSTRUMENTS
POST OFFICE BOX 655012 • DALLAS, TEXAS 75265

logic diagrams (positive logic)

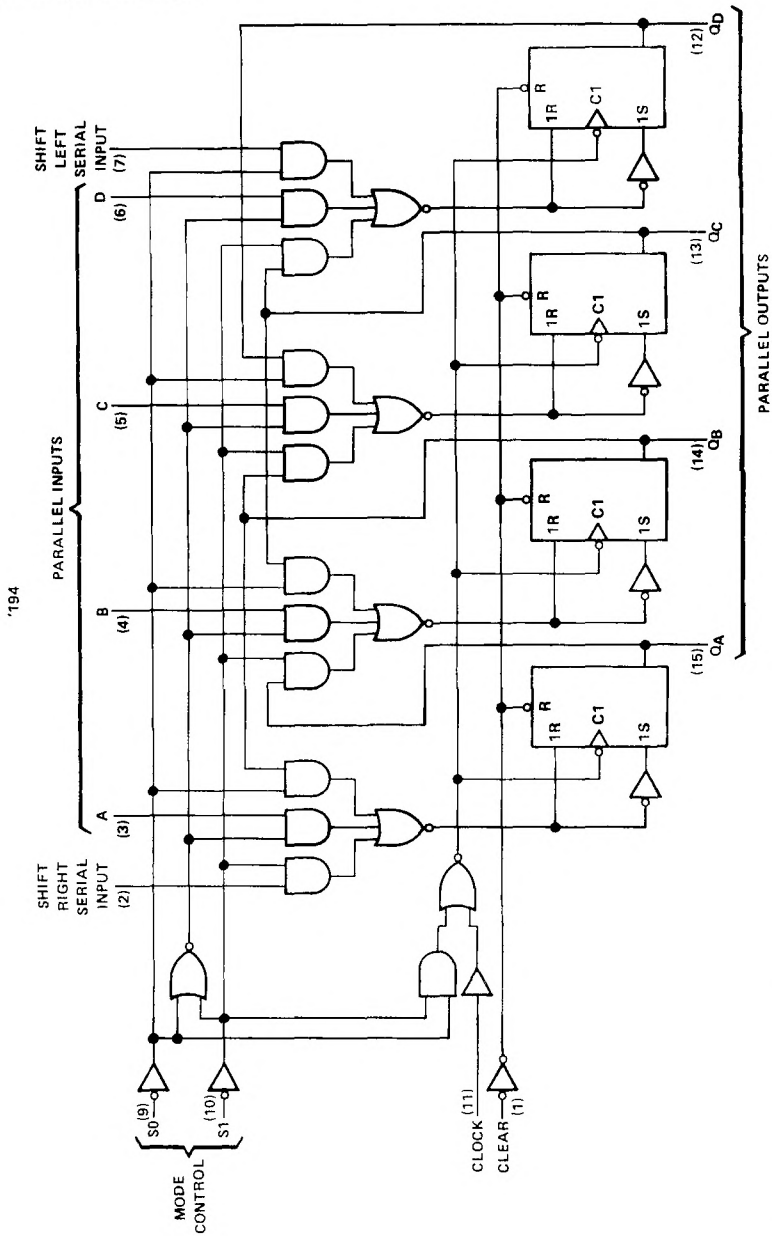

Pin numbers shown are for D, J, N, and W packages.

logic diagrams (continued)

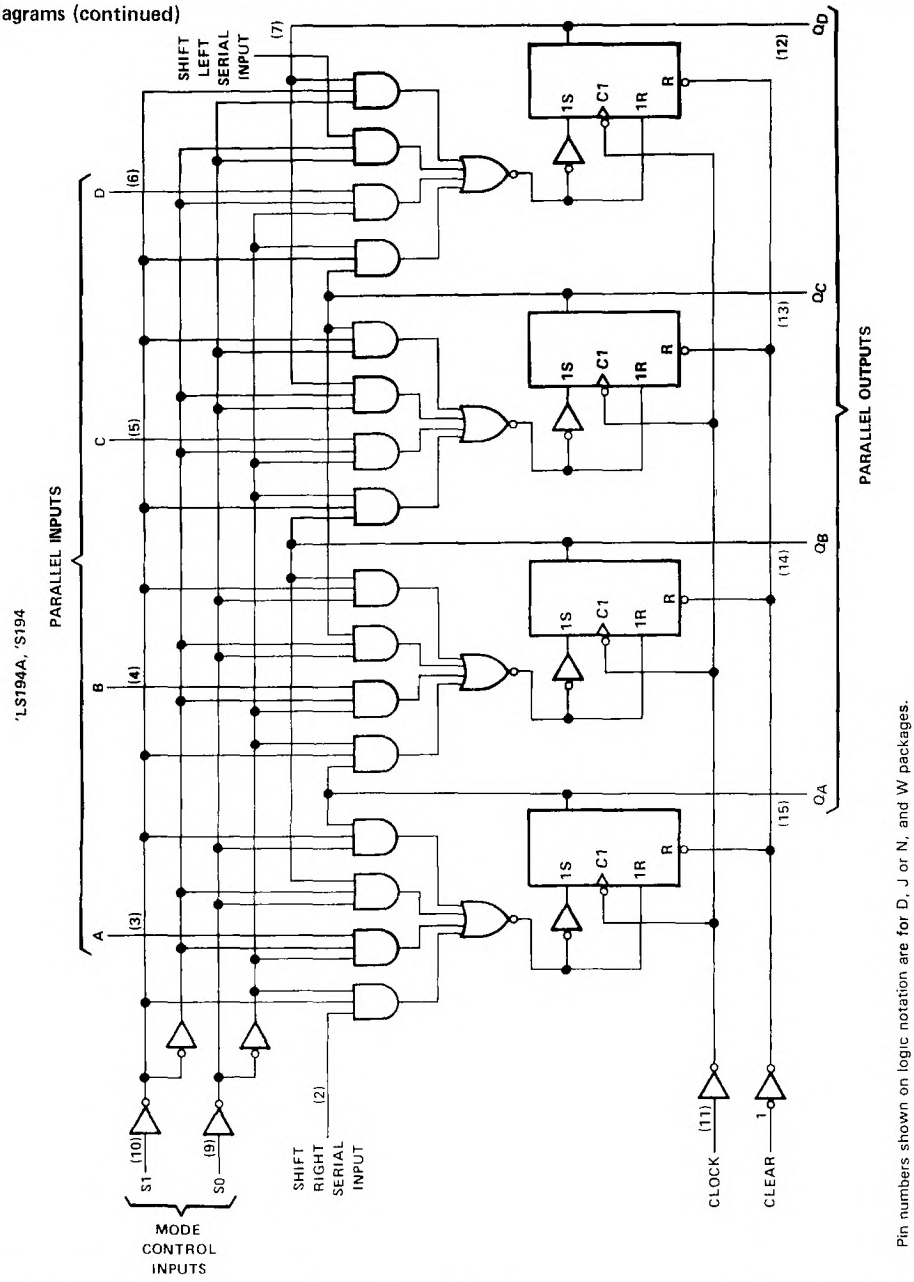

Pin numbers shown on logic notation are for D, J or N, and W packages.

TEXAS INSTRUMENTS
POST OFFICE BOX 655012 • DALLAS, TEXAS 75265

typical clear, load, right-shift, left-shift, inhibit, and clear sequences

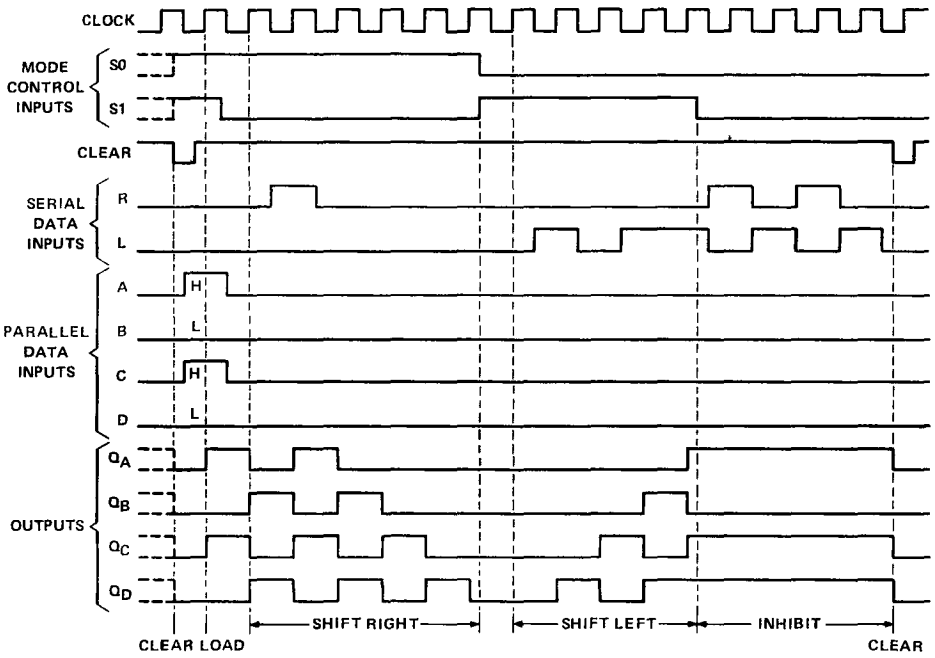

absolute maximum ratings over operating free-air temperature range (unless otherwise noted)

Supply voltage, V_{CC} (see Note 1) . . . . . 7 V
Input voltage . . . . . 5.5 V
Operating free-air temperature range: SN54194 . . . . . −55°C to 125°C
SN74194 . . . . . 0°C to 70°C
Storage temperature range . . . . . −65°C to 150°C

NOTE 1: Voltage values are with respect to network ground terminal.

recommended operating conditions

		SN54194			SN74194			UNIT
		MIN	NOM	MAX	MIN	NOM	MAX	
Supply voltage, V_{CC}		4.5	5	5.5	4.75	5	5.25	V
High-level output current, I_{OH}				−800			−800	μA
Low-level output current, I_{OL}				16			16	mA
Clock frequency, f_{clock}		0		25	0		25	MHz
Width of clock or clear pulse, t_w		20			20			ns
Setup time, t_{su}	Mode control	30			30			ns
	Serial and parallel data	20			20			ns
	Clear inactive-state	25			25			ns
Hold time at any input, t_h		0			0			ns
Operating free-air temperature, T_A		−55		125	0		70	°C

electrical characteristics over recommended operating free-air temperature range (unless otherwise noted)

PARAMETER		TEST CONDITIONS†	SN54194			SN74194			UNIT
			MIN	TYP‡	MAX	MIN	TYP‡	MAX	
V_{IH}	High-level input voltage		2			2			V
V_{IL}	Low-level input voltage				0.8			0.8	V
V_{IK}	Input clamp voltage	V_{CC} = MIN, I_I = −12 mA			−1.5			−1.5	V
V_{OH}	High-level output voltage	V_{CC} = MIN, V_{IH} = 2 V, V_{IL} = 0.8 V, I_{OH} = −800 μA	2.4	3.4		2.4	3.4		V
V_{OL}	Low-level output voltage	V_{CC} = MIN, V_{IH} = 2 V, V_{IL} = 0.8 V, I_{OL} = 16 mA		0.2	0.4		0.2	0.4	V
I_I	Input current at maximum input voltage	V_{CC} = MAX, V_I = 5.5 V			1			1	mA
I_{IH}	High-level input current	V_{CC} = MAX, V_I = 2.4 V			40			40	μA
I_{IL}	Low-level input current	V_{CC} = MAX, V_I = 0.4 V			−1.6			−1.6	mA
I_{OS}	Short-circuit output current§	V_{CC} = MAX	−20		−57	−18		−57	mA
I_{CC}	Supply current	V_{CC} = MAX, See Note 2		39	63		39	63	mA

†For conditions shown as MIN or MAX, use the appropriate value specified under recommended operating conditions.
‡All typical values are at V_{CC} = 5 V, T_A = 25°C.
§Not more than one output should be shorted at a time.
NOTE 2: With all outputs open, inputs A through D grounded, and 4.5 V applied to S0, S1, clear, and the serial inputs, I_{CC} is tested with a momentary GND, then 4.5 V applied to clock.

switching characteristics, V_{CC} = 5 V, T_A = 25°C

PARAMETER		TEST CONDITIONS	MIN	TYP	MAX	UNIT
f_{max}	Maximum clock frequency	C_L = 15 pF, R_L = 400 Ω, See Figure 1	25	36		MHz
t_{PHL}	Propagation delay time, high-to-low-level output from clear			19	30	ns
t_{PLH}	Propagation delay time, low-to-high-level output from clock			14	22	ns
t_{PHL}	Propagation delay time, high-to-low-level output from clock			17	26	ns

TEXAS INSTRUMENTS
POST OFFICE BOX 655012 • DALLAS, TEXAS 75265

absolute maximum ratings over operating free-air temperature range (unless otherwise noted)

Supply voltage, V_{CC} (see Note 1) . . . . . 7 V
Input voltage . . . . . 7 V
Operating free-air temperature range: SN54LS194A . . . . . −55°C to 125°C
SN74LS194A . . . . . 0°C to 70°C
Storage temperature range . . . . . −65°C to 150°C

NOTE 1: Voltage values are with respect to network ground terminal.

recommended operating conditions

		SN54LS194A			SN74LS194A			UNIT
		MIN	NOM	MAX	MIN	NOM	MAX	
Supply voltage, V_{CC}		4.5	5	5.5	4.75	5	5.25	V
High-level output current, I_{OH}				−400			−400	μA
Low-level output current, I_{OL}				4			8	mA
Clock frequency, f_{clock}		0		25	0		25	MHz
Width of clock or clear pulse, t_w		20			20			ns
Setup time, t_{su}	Mode control	30			30			ns
	Serial and parallel data	20			20			ns
	Clear inactive-state	25			25			ns
Hold time at any input, t_h		0			0			ns
Operating free-air temperature, T_A		−55		125	0		70	°C

electrical characteristics over recommended operating free-air temperature range (unless otherwise noted)

PARAMETER		TEST CONDITIONS†		SN54LS194A			SN74LS194A			UNIT
				MIN	TYP‡	MAX	MIN	TYP‡	MAX	
V_{IH}	High-level input voltage			2			2			V
V_{IL}	Low-level input voltage					0.7			0.8	V
V_I	Input clamp voltage	V_{CC} = MIN,	I_I = −18 mA			−1.5			−1.5	V
V_{OH}	High-level output voltage	V_{CC} = MIN, V_{IL} = V_{IL} max,	V_{IH} = 2 V, I_{OH} = −400 μA	2.5	3.5		2.7	3.5		V
V_{OL}	Low-level output voltage	V_{CC} = MIN, V_{IH} = 2 V, V_{IL} = V_{IL} max	I_{OL} = 4 mA		0.25	0.4		0.25	0.4	V
			I_{OL} = 8 mA					0.35	0.5	
I_I	Input current at maximum input voltage	V_{CC} = MAX,	V_I = 7 V			0.1			0.1	mA
I_{IH}	High-level input current	V_{CC} = MAX,	V_I = 2.7 V			20			20	μA
I_{IL}	Low-level input current	V_{CC} = MAX,	V_I = 0.4 V			−0.4			−0.4	mA
I_{OS}	Short-circuit output current§	V_{CC} = MAX		−20		−100	−20		−100	mA
I_{CC}	Supply current	V_{CC} = MAX,	See Note 2		15	23		15	23	mA

†For conditions shown as MIN or MAX, use the appropriate value specified under recommended operating conditions.
‡All typical values are at V_{CC} = 5 V, T_A = 25°C
§Not more than one output should be shorted at a time, and duration of the short-circuit should not exceed one second.
NOTE 2: With all outputs open, inputs A through D grounded, and 4.5 V applied to S0, S1, clear, and the serial inputs, I_{CC} is tested with a momentary GND, then 4.5 V, applied to clock.

switching characteristics, V_{CC} = 5 V, T_A = 25°C

PARAMETER		TEST CONDITIONS	MIN	TYP	MAX	UNIT
f_{max}	Maximum clock frequency	C_L = 15 pF, R_L = 2 kΩ, See Figure 1	25	36		MHz
t_{PHL}	Propagation delay time, high-to-low-level output from clear			19	30	ns
t_{PLH}	Propagation delay time, low-to-high level output from clock			14	22	ns
t_{PHL}	Propagation delay time, high-to-low level output from clock			17	26	ns

absolute maximum ratings over operating free-air temperature range (unless otherwise noted)

Supply voltage, V_{CC} (see Note 1) . . . . . 7 V
Input voltage . . . . . 5.5 V
Operating free-air temperature range: SN54S194 . . . . . −55°C to 125°C
SN74S194 . . . . . 0°C to 70°C
Storage temperature range . . . . . −65°C to 150°C

NOTE 1: Voltage values are with respect to network ground terminal

recommended operating conditions

		SN54S194			SN74S194			UNIT
		MIN	NOM	MAX	MIN	NOM	MAX	
Supply voltage, V_{CC}		4.5	5	5.5	4.75	5	5.25	V
High-level output current, I_{OH}				−1			−1	mA
Low-level output current, I_{OL}				20			20	mA
Clock frequency, f_{clock}		0		70	0		70	MHz
Width of clock pulse, $t_{w(clock)}$		7			7			ns
Width of clear pulse, $t_{w(clear)}$		12			12			ns
Setup time, t_{su}	Mode control	11			11			ns
	Serial and parallel data	5			5			ns
	Clear inactive-state	9			9			ns
Hold time at any input, t_h		3			3			ns
Operating free-air temperature, T_A		−55		125	0		70	°C

electrical characteristics over recommended operating free-air temperature range (unless otherwise noted)

PARAMETER		TEST CONDITIONS†		SN54S194			SN74S194			UNIT
				MIN	TYP‡	MAX	MIN	TYP‡	MAX	
V_{IH}	High-level input voltage			2			2			V
V_{IL}	Low-level input voltage					0.8			0.8	V
V_{IK}	Input clamp voltage	V_{CC} = MIN, I_I = −18 mA				−1.2			−1.2	V
V_{OH}	High-level output voltage	V_{CC} = MIN, V_{IH} = 2 V, V_{IL} = 0.8 V, I_{OH} = −1 mA		2.5	3.4		2.7	3.4		V
V_{OL}	Low-level output voltage	V_{CC} = MIN, V_{IH} = 2 V, V_{IL} = 0.8 V, I_{OL} = 20 mA				0.5			0.5	V
I_I	Input current at maximum input voltage	V_{CC} = MAX, V_I = 5.5 V				1			1	mA
I_{IH}	High-level input current	V_{CC} = MAX, V_I = 2.7 V				50			50	μA
I_{IL}	Low-level input current	V_{CC} = MAX, V_I = 0.5 V				−2			−2	mA
I_{OS}	Short-circuit output current§	V_{CC} = MAX		−40		−100	−40		−100	mA
I_{CC}	Supply current	V_{CC} = MAX, See Note 2			85	135		85	135	mA
		V_{CC} = MAX, T_A = 125°C, See Note 2	W package			110				

†For conditions shown as MIN or MAX, use the appropriate value specified under recommended operating conditions.
‡All typical values are at V_{CC} = 5 V, T_A = 25°C.
§Not more than one output should be shorted at a time, and duration of the short-circuit should not exceed one second.
NOTE 2: With all outputs open, inputs A through D grounded, and 4.5 V applies to S0, S1, clear, and the serial inputs, I_{CC} is tested with a momentary GND, then 4.5 V, applied to clock.

switching characteristics, V_{CC} = 5 V, T_A = 25°C

PARAMETER		TEST CONDITIONS	MIN	TYP	MAX	UNIT
f_{max}	Maximum clock frequency	C_L = 15 pF, R_L = 280 Ω, See Figure 1	70	106		MHz
t_{PHL}	Propagation delay time, high-to-low-level output from clear			12.5	18.5	ns
t_{PLH}	Propagation delay time, low-to-high-level output from clock		4	8	12	ns
t_{PHL}	Propagation delay time, high-to-low-level output from clock		4	11	16.5	ns

TEXAS INSTRUMENTS
POST OFFICE BOX 655012 • DALLAS, TEXAS 75265

PARAMETER MEASUREMENT INFORMATION

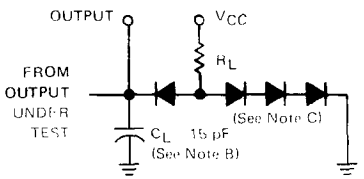

LOAD FOR OUTPUT UNDER TEST

TEST TABLE FOR SYNCHRONOUS INPUTS

DATA INPUT FOR TEST	S1	S0	OUTPUT TESTED (SEE NOTE E)
A	4.5 V	4.5 V	Q_A at t_{n+1}
B	4.5 V	4.5 V	Q_B at t_{n+1}
C	4.5 V	4.5 V	Q_C at t_{n+1}
D	4.5 V	4.5 V	Q_D at t_{n+1}
L Serial Input	4.5 V	0 V	Q_A at t_{n+4}
R Serial Input	0 V	4.5 V	Q_D at t_{n+4}

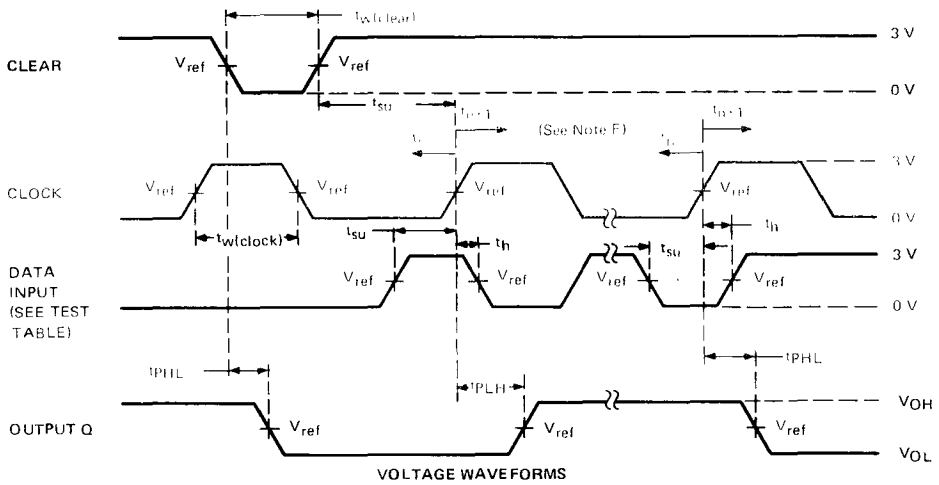

VOLTAGE WAVEFORMS

NOTES: A. The clock pulse generator has the following characteristics $Z_{out} \approx 50\ \Omega$ and PRR $\leq$ 1 MHz. For '194, $t_r \leq 7$ ns and $t_f \leq 7$ ns. For 'LS194A, $t_r \leq 15$ ns and $t_f \leq 6$ ns. For 'S194, $t_r \leq 2.5$ ns and $t_f \leq 2.5$ ns. When testing f_{max}, vary PRR.
B. C_L includes probe and jig capacitance
C. All diodes are 1N3064 or 1N916.
D. A clear pulse is applied prior to each test.
E. For '194 and 'S194, $V_{ref} = 1.5$ V; for 'LS194A, $V_{ref} = 1.3$ V.
F. Propagation delay times (t_{PLH} and t_{PHL}) are measured at t_{n+1}. Proper shifting of data is verified at t_{n+4} with a functional test.
G. t_n = bit time before clocking transition.
t_{n+1} = bit time after one clocking transition.
t_{n+4} = bit time after four clocking transitions.

FIGURE 1–SWITCHING TIMES

- Synchronous Parallel Load
- Positive-Edge-Triggered Clocking
- Parallel Inputs and Outputs from Each Flip-Flop
- Direct Overriding Clear
- J and $\overline{K}$ Inputs to First Stage
- Complementary Outputs from Last Stage
- For Use in High Performance:
  Accumulators/Processors
  Serial-to-Parallel, Parallel-to-Serial
  Converters

SN54195, SN54LS195A, SN54S195 . . . J OR W PACKAGE
SN74195 . . . N PACKAGE
SN74LS195A, SN74S195 . . . D OR N PACKAGE
(TOP VIEW)

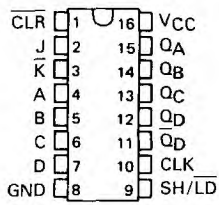

SN54LS195, SN54S195 . . . FK PACKAGE
(TOP VIEW)

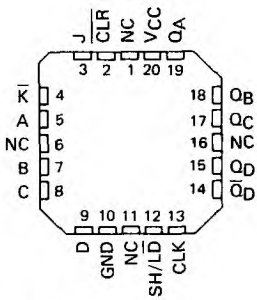

NC - No internal connection

description

These 4-bit registers feature parallel inputs, parallel outputs, J-$\overline{K}$ serial inputs, shift/load (SH/$\overline{LD}$) control input, and a direct overriding clear. All inputs are buffered to lower the input drive requirements. The register has two modes of operation:

Parallel (broadside) load
Shift (in the direction Q_A toward Q_D)

Parallel loading is accomplished by applying the four bits of data and taking SH/$\overline{LD}$ low. The data is loaded into the associated flip-flop and appears at the outputs after the positive transition of the clock input. During loading, serial data flow is inhibited.

Shifting is accomplished synchronously when SH/$\overline{LD}$ is high. Serial data for this mode is entered at the J-$\overline{K}$ inputs. These inputs permit the first stage to perform as a J-$\overline{K}$, D-, or T-type flip-flop as shown in the function table.

The high-performance 'S195, with a 105-megahertz typical maximum shift-frequency, is particularly attractive for very-high-speed data processing systems. In most cases existing systems can be upgraded merely by using this Schottky-clamped shift register.

TYPE	TYPICAL MAXIMUM CLOCK FREQUENCY	TYPICAL POWER DISSIPATION
'195	39 MHz	195 mW
'LS195A	39 MHz	70 mW
'S195	105 MHz	350 mW

FUNCTION TABLE

INPUTS									OUTPUTS				
CLEAR	SHIFT/$\overline{LOAD}$	CLOCK	SERIAL		PARALLEL				Q_A	Q_B	Q_C	Q_D	$\overline{Q}_D$
			J	$\overline{K}$	A	B	C	D					
L	X	X	X	X	X	X	X	X	L	L	L	L	H
H	L	↑	X	X	a	b	c	d	a	b	c	d	$\overline{d}$
H	H	L	X	X	X	X	X	X	Q_{A0}	Q_{B0}	Q_{C0}	Q_{D0}	$\overline{Q}_{D0}$
H	H	↑	L	H	X	X	X	X	Q_{A0}	Q_{A0}	Q_{Bn}	Q_{Cn}	$\overline{Q}_{Cn}$
H	H	↑	L	L	X	X	X	X	L	Q_{An}	Q_{Bn}	Q_{Cn}	$\overline{Q}_{Cn}$
H	H	↑	H	H	X	X	X	X	H	Q_{An}	Q_{Bn}	Q_{Cn}	$\overline{Q}_{Cn}$
H	H	↑	H	L	X	X	X	X	$\overline{Q}_{An}$	Q_{An}	Q_{Bn}	Q_{Cn}	$\overline{Q}_{Cn}$

H = high level (steady state)
L = low level (steady state)
X = irrelevant (any input, including transitions)
↑ = transition from low to high level
a, b, c, d = the level of steady-state input at A, B, C, or D, respectively
Q_{A0}, Q_{B0}, Q_{C0}, Q_{D0} = the level of Q_A, Q_B, Q_C, or Q_D, respectively, before the indicated steady-state input conditions were established
Q_{An}, Q_{Bn}, Q_{Cn} = the level of Q_A, Q_B, or Q_C, respectively, before the most-recent transition of the clock

PRODUCTION DATA documents contain information current as of publication date. Products conform to specifications per the terms of Texas Instruments standard warranty. Production processing does not necessarily include testing of all parameters.

logic diagram (positive logic)

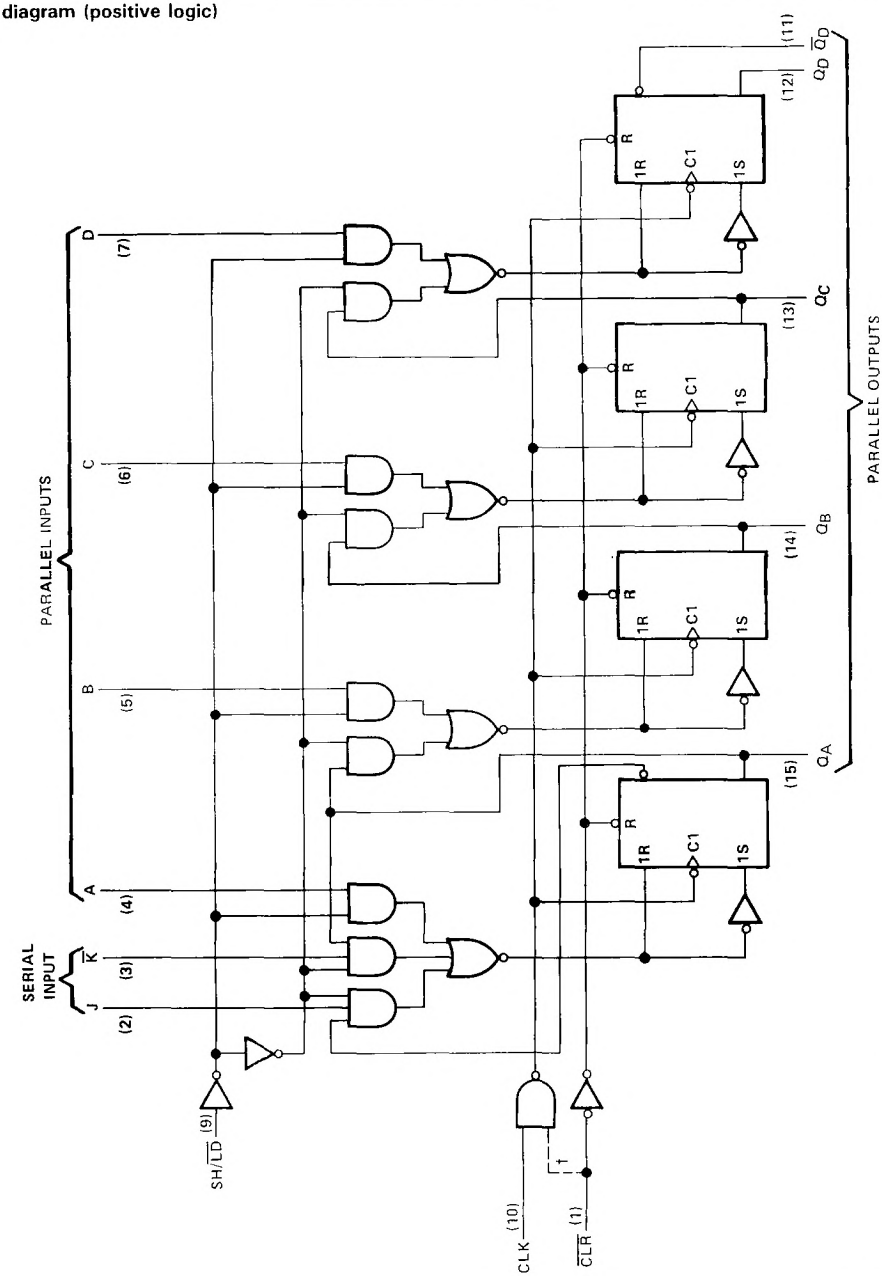

†This connection is made on '195 only.
Pin numbers shown are for D, J, N, and W packages.

typical clear, shift, and load sequences

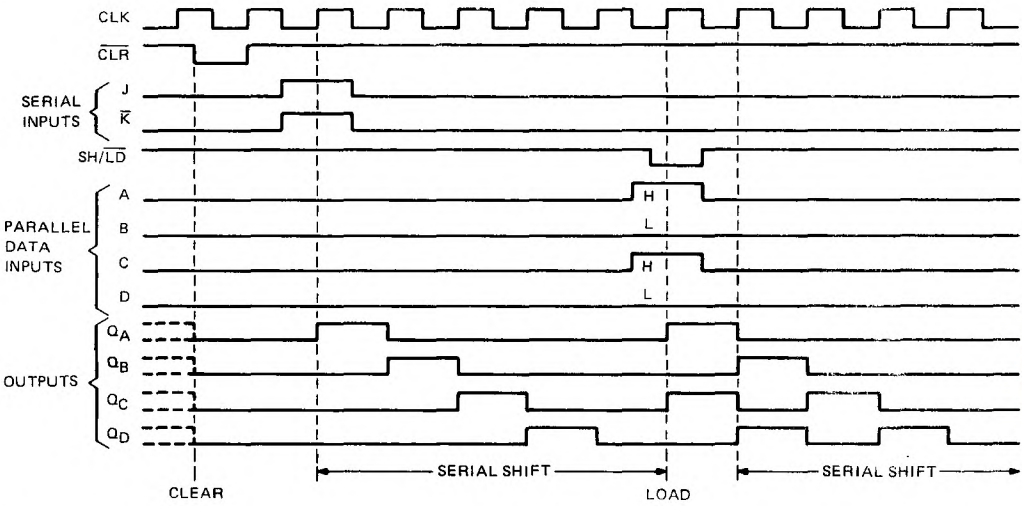

logic symbols†

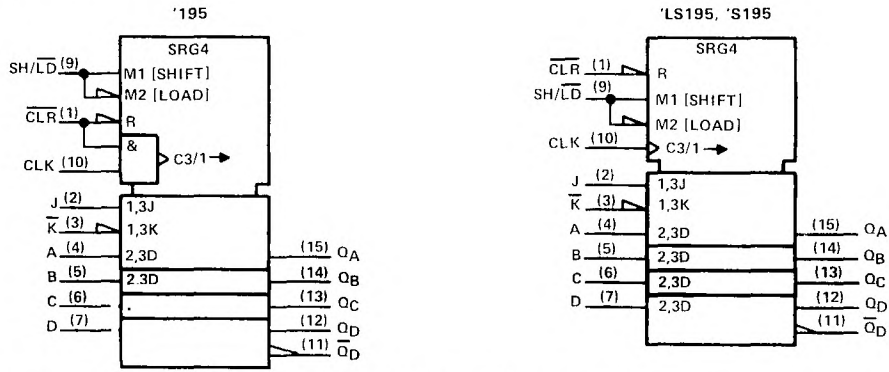

†These symbols are in accordance with ANSI/IEEE Std. 91-1984 and IEC Publication 617-12.
Pin numbers are for D, J, N, and W packages.

schematics of inputs and outputs

'195

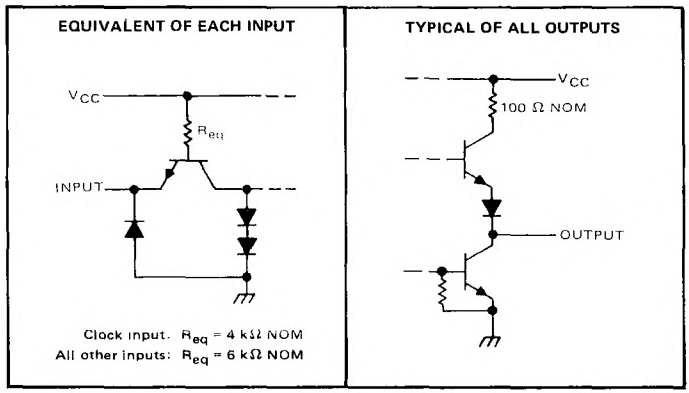

'LS195A

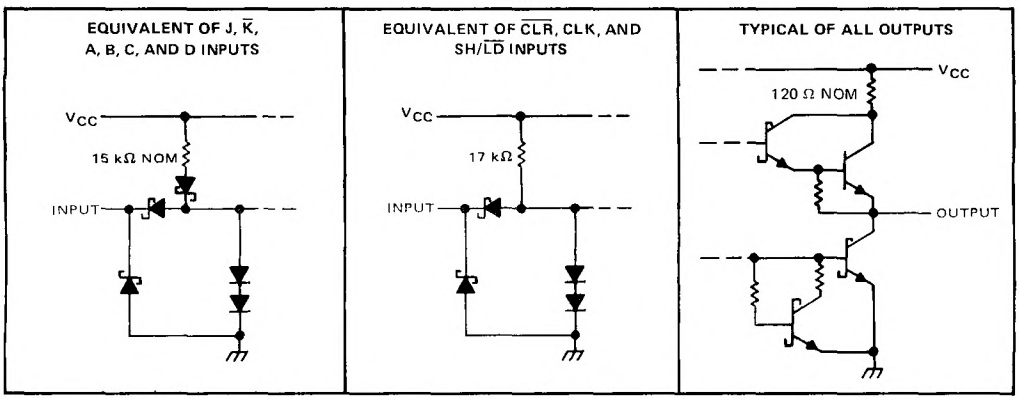

'S195

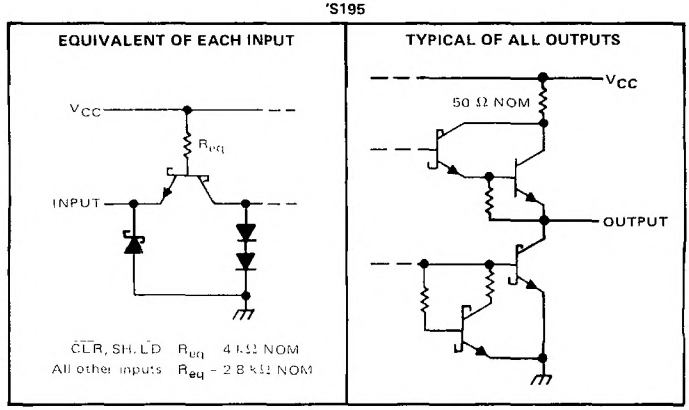

TEXAS INSTRUMENTS
POST OFFICE BOX 655012 • DALLAS, TEXAS 75265

absolute maximum ratings over operating free-air temperature range (unless otherwise noted)

Supply voltage, V_{CC} (see Note 1) . . . . . 7 V
Input voltage . . . . . 5.5 V
Operating free-air temperature range: SN54195 . . . . . −55°C to 125°C
SN74195 . . . . . 0°C to 70°C
Storage temperature range . . . . . −65°C to 150°C

NOTE 1: Voltage values are with respect to network ground terminal.

recommended operating conditions

		SN54195			SN74195			UNIT
		MIN	NOM	MAX	MIN	NOM	MAX	
Supply voltage, V_{CC}		4.5	5	5.5	4.75	5	5.25	V
High-level output current, I_{OH}				−800			−800	μA
Low-level output current, I_{OL}				16			16	mA
Clock frequency, f_{clock}		0		30	0		30	MHz
Width of clock input pulse, $t_{w(clock)}$		16			16			ns
Width of clear input pulse, $t_{w(clear)}$		12			12			ns
Setup time, t_{su} (see Figure 1)	Shift/load	25			25			ns
	Serial and parallel data	20			20			
	Clear inactive-state	25			25			
Shift/load release time, $t_{release}$ (see Figure 1)				10			10	ns
Serial and parallel data hold time, t_h (see Figure 1)		0			0			ns
Operating free-air temperature, T_A		−55		125	0		70	°C

electrical characteristics over recommended operating free-air temperature range (unless otherwise noted)

PARAMETER		TEST CONDITIONS†		MIN	TYP‡	MAX	UNIT
V_{IH}	High-level input voltage			2			V
V_{IL}	Low-level input voltage					0.8	V
V_{IK}	Input clamp voltage	V_{CC} = MIN, I_I = −12 mA				−1.5	V
V_{OH}	High-level output voltage	V_{CC} = MIN, V_{IH} = 2 V, V_{IL} = 0.8 V, I_{OH} = −800 μA		2.4	3.4		V
V_{OL}	Low-level output voltage	V_{CC} = MIN, V_{IH} = 2 V, V_{IL} = 0.8 V, I_{OL} = 16 mA			0.2	0.4	V
I_I	Input current at maximum input voltage	V_{CC} = MAX, V_I = 5.5 V				1	mA
I_{IH}	High-level input current	V_{CC} = MAX, V_I = 2.4 V				40	μA
I_{IL}	Low-level input current	V_{CC} = MAX, V_I = 0.4 V				−1.6	mA
I_{OS}	Short-circuit output current§	V_{CC} = MAX	SN54195	−20		−57	mA
			SN74195	−18		−57	
I_{CC}	Supply current	V_{CC} = MAX, See Note 2			39	63	mA

†For conditions shown as MIN or MAX, use the appropriate value specified under recommended operating conditions.
‡All typical values are at V_{CC} = 5 V, T_A = 25°C.
§Not more than one output should be shorted at a time.
NOTE 2: With all outputs open, shift/load grounded, and 4.5 V applied to the J, $\overline{K}$, and data inputs, I_{CC} is measured by applying a momentary ground, followed by 4.5 V, to clear and then applying a momentary ground, followed by 4.5 V, to clock.

switching characteristics, V_{CC} = 5 V, T_A = 25°C

PARAMETER		TEST CONDITIONS	MIN	TYP	MAX	UNIT
f_{max}	Maximum clock frequency	C_L = 15 pF, R_L = 400 Ω, See Figure 1	30	39		MHz
t_{PHL}	Propagation delay time, high-to-low-level output from clear			19	30	ns
t_{PLH}	Propagation delay time, low-to-high-level output from clock			14	22	ns
t_{PHL}	Propagation delay time, high-to-low-level output from clock			17	26	ns

absolute maximum ratings over operating free-air temperature range (unless otherwise noted)

Supply voltage, V_{CC} (see Note 1) . . . . . 7 V
Input voltage . . . . . 7 V
Operating free-air temperature range: SN54LS195A . . . . . −55°C to 125°C
SN74LS195A . . . . . 0°C to 70°C
Storage temperature range . . . . . −65°C to 150°C

NOTE 1: Voltage values are with respect to network ground terminal

recommended operating conditions

		SN54LS195A			SN74LS195A			UNIT
		MIN	NOM	MAX	MIN	NOM	MAX	
Supply voltage, V_{CC}		4.5	5	5.5	4.75	5	5.25	V
High-level output current, I_{OH}				−400			−400	μA
Low-level output current, I_{OL}				4			8	mA
Clock frequency, f_{clock}		0		30	0		30	MHz
Width of clock or [illegible] pulse, $t_{w(clock)}$		16			16			ns
Width of clear input pulse, $t_{w(clear)}$		12			12			ns
Setup time, t_{su} (see Figure 1)	Shift/load	25			25			ns
	Serial and parallel data	15			15			
	Clear inactive-state	25			25			
Shift/load release time, $t_{release}$ (see Figure 1)				10			20	ns
Serial and parallel data hold time, t_h (see Figure 1)		0			0			ns
Operating free-air temperature, T_A		−55		125	0		70	°C

electrical characteristics over recommended operating free-air temperature range (unless otherwise noted)

PARAMETER		TEST CONDITIONS†		SN54LS195A			SN74LS195A			UNIT
				MIN	TYP‡	MAX	MIN	TYP‡	MAX	
V_{IH}	High-level input voltage			2			2			V
V_{IL}	Low-level input voltage					0.7			0.8	V
V_{IK}	Input clamp voltage	V_{CC} = MIN, I_I = −18 mA				−1.5			−1.5	V
V_{OH}	High-level output voltage	V_{CC} = MIN, V_{IH} = 2 V, V_{IL} = V_{IL} max, I_{OH} = −400 μA		2.5	3.4		2.7	3.4		V
V_{OL}	Low-level output voltage	V_{CC} = MIN, V_{IH} = 2 V, V_{IL} = V_{IL} max	I_{OL} = 4 mA		0.25	0.4		0.25	0.4	V
			I_{OL} = 8 mA					0.35	0.5	
I_I	Input current at maximum input voltage	V_{CC} = MAX, V_I = 7 V				0.1			0.1	mA
I_{IH}	High-level input current	V_{CC} = MAX, V_I = 2.7 V				20			20	μA
I_{IL}	Low-level input current	V_{CC} = MAX, V_I = 0.4 V				−0.4			−0.4	mA
I_{OS}	Short-circuit output current§	V_{CC} = MAX		−20		−100	−20		−100	mA
I_{CC}	Supply current	V_{CC} = MAX, See Note 2			14	21		14	21	mA

†For conditions shown as MIN or MAX, use the appropriate value specified under recommended operating conditions.
‡All typical values are at V_{CC} = 5 V, T_A = 25°C.
§Not more than one output should be shorted at a time, and duration of the short-circuit should not exceed one second.
NOTE 2: With all outputs open, shift/load grounded, and 4.5 V applied to the J, K, and data inputs, I_{CC} is measured by applying a momentary ground, followed by 4.5 V, to clear and then applying a momentary ground, followed by 4.5 V, to clock.

switching characteristics, V_{CC} = 5 V, T_A = 25°C

PARAMETER		TEST CONDITIONS	MIN	TYP	MAX	UNIT
f_{max}	Maximum clock frequency	C_L = 15 pF, R_L = 2 kΩ, See Figure 1	30	39		MHz
t_{PHL}	Propagation delay time, high-to-low-level output from clear			19	30	ns
t_{PLH}	Propagation delay time, low-to-high-level output from clock			14	22	ns
t_{PHL}	Propagation delay time, high-to-low-level output from clock			17	26	ns

TEXAS INSTRUMENTS
POST OFFICE BOX 655012 • DALLAS, TEXAS 75265

absolute maximum ratings over operating free-air temperature range (unless otherwise noted)

Supply voltage, V_{CC} (see Note 1) . . . . . 7 V
Input voltage . . . . . 5.5 V
Operating free-air temperature range: SN54S195 . . . . . −55°C to 125°C
SN74S195 . . . . . 0°C to 70°C
Storage temperature range . . . . . −65°C to 150°C

NOTE 1: Voltage values are with respect to network ground terminal

recommended operating conditions

		SN54S195			SN74S195			UNIT
		MIN	NOM	MAX	MIN	NOM	MAX	
Supply voltage, V_{CC}		4.5	5	5.5	4.75	5	5.25	V
High-level output current, I_{OH}				−1			−1	mA
Low-level output current, I_{OL}				20			20	mA
Clock frequency,		0		70	0		70	MHz
Width of clock input, $t_{w(clock)}$		7			7			ns
Width of clear input pulse, $t_{w(clear)}$		12			12			ns
Setup time, t_{su} (see Figure 1)	Shift/load	11			11			ns
	Serial and parallel data	5			5			
	Clear inactive-state	9			9			
Shift/load release time, $t_{release}$ (see Figure 1)				2			6	ns
Serial and parallel data hold time, t_h (see Figure 1)		3			3			ns
Operating free-air temperature, T_A		−55		125	0		70	°C

electrical characteristics over recommended operating free-air temperature range (unless otherwise noted)

PARAMETER		TEST CONDITIONS†			MIN	TYP‡	MAX	UNIT
V_{IH}	High-level input voltage				2			V
V_{IL}	Low-level input voltage						0.8	V
V_{IK}	Input clamp voltage	V_{CC} = MIN,	I_I = −18 mA				−1.2	V
V_{OH}	High-level output voltage	V_{CC} = MIN, V_{IL} = 0.8 V,	V_{IH} = 2 V, I_{OH} = −1 mA	SN54S195	2.5	3.4		V
				SN74S195	2.7	3.4		
V_{OL}	Low-level output voltage	V_{CC} = MIN, V_{IL} = 0.8 V,	V_{IH} = 2 V, I_{OL} = 20 mA				0.5	V
I_I	Input current at maximum input voltage	V_{CC} = MAX,	V_I = 5.5 V				1	mA
I_{IH}	High-level input current	V_{CC} = MAX,	V_I = 2.7 V				50	μA
I_{IL}	Low-level input current	V_{CC} = MAX,	V_I = 0.5 V				−2	mA
I_{OS}	Short-circuit output current§	V_{CC} = MAX			−40		−100	mA
I_{CC}	Supply current	V_{CC} = MAX,	See Note 2	SN54S195		70	99	mA
				SN74S195		70	109	

†For conditions shown as MIN or MAX, use the appropriate value specified under recommended operating conditions.
‡All typical values are at V_{CC} = 5 V, T_A = 25°C.
§Not more than one output should be shorted at a time, and duration of the short-circuit should not exceed one second.
NOTE 2: With all outputs open, shift/load grounded, and 4.5 V applied to the J, $\overline{K}$, and data inputs, I_{CC} is measured by applying a momentary ground, followed by 4.5 V, to clear, and then applying a momentary ground, followed by 4.5 V, to clock.

switching characteristics, V_{CC} = 5 V, T_A = 25°C

PARAMETER		[illegible]	MIN	TYP	MAX	UNIT
f_{max}	Maximum clock frequency	C_L = 15 pF, R_L = 280 Ω, See Figure 1	70	105		MHz
t_{PHL}	Propagation delay time, high-to-low-level output from clear			12.5	18.5	ns
t_{PLH}	Propagation delay time, low-to-high-level output from clock			8	12	ns
t_{PHL}	Propagation delay time, high-to-low-level output from clock			11	16.5	ns

PARAMETER MEASUREMENT INFORMATION

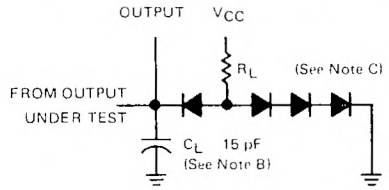

LOAD FOR OUTPUT UNDER TEST

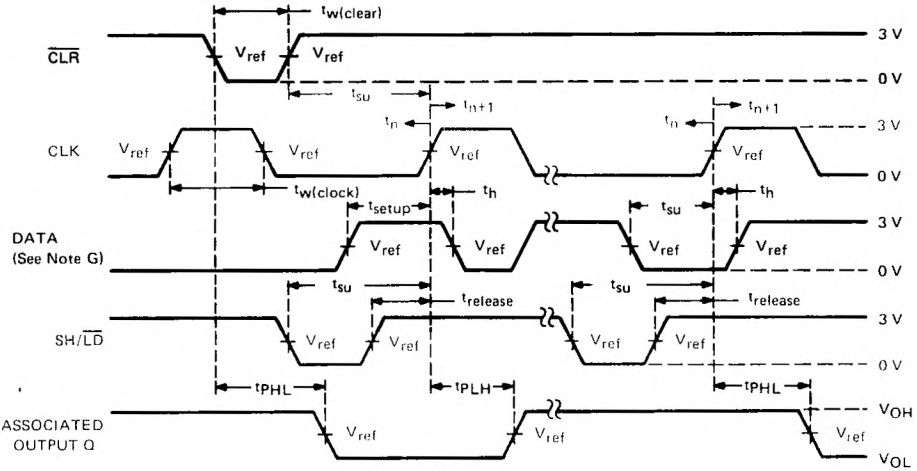

VOLTAGE WAVEFORMS

NOTES: A. The clock pulse generator has the following characteristics: $Z_{out} \approx 50\ \Omega$ and PRR $\leq$ 1 MHz. For '195, $t_r \leq 7$ ns and $t_f \leq 7$ ns. For 'LS195A, $t_r \leq 15$ ns and $t_f \leq 6$ ns. For 'S195, $t_r = 2.5$ ns and $t_f = 2.5$ ns. When testing f_{max}, vary the clock PRR.

B. C_L includes probe and jig capacitance.

C. All diodes are 1N3064 or equivalent.

D. A clear pulse is applied prior to each test.

E. For '195 and 'S195, $V_{ref} = 1.5$ V; for 'LS195A, $V_{ref} = 1.3$ V.

F. Propagation delay times (t_{PLH} and t_{PHL}) are measured at t_{n+1}. Proper shifting of data is verified at t_{n+4} with a functional test.

G. J and $\overline{K}$ inputs are tested the same as data A, B, C, and D inputs except that shift/load input remains high.

H. t_n = bit time before clocking transition.
t_{n+1} = bit time after one clocking transition.
t_{n+4} = bit time after four clocking transitions.

FIGURE 1–SWITCHING TIMES

TEXAS INSTRUMENTS
POST OFFICE BOX 655012 • DALLAS, TEXAS 75265

SN54196, SN54197, SN54LS196, SN54LS197, SN54S196, SN54S197, SN74196, SN74197, SN74LS196, SN74LS197, SN74S196, SN74S197
50/30/100-MHz PRESETTABLE DECADE OR BINARY COUNTERS/LATCHES

OCTOBER 1976—REVISED MARCH 1988

- Performs BCD, Bi-Quinary, or Binary Counting
- Fully Programmable
- Fully Independent Clear Input
- Input Clamping Diodes Simplify System Design
- Output Q_A Maintains Full Fan-out Capability In Addition to Driving Clock-2 Input

TYPES	GUARANTEED COUNT FREQUENCY		TYPICAL POWER DISSIPATION
	CLOCK 1	CLOCK 2	
'196, '197	0-50 MHz	0-25 MHz	240 mW
'LS196, 'LS197	0-30 MHz	0-15 MHz	80 mW
'S196, 'S197	0-100 MHz	0-50 MHz	375 mW

SN54196, SN54LS196, SN54S196, SN54197, SN54LS197, SN54S197 . . . J OR W PACKAGE
SN74196, SN74197 . . . N PACKAGE
SN74LS196, SN74S196, SN74LS197, SN74S197 . . . D OR N PACKAGE
(TOP VIEW)

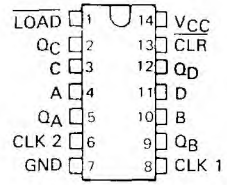

SN54LS196, SN54S196, SN54LS197, SN54S197 . . . FK PACKAGE
(TOP VIEW)

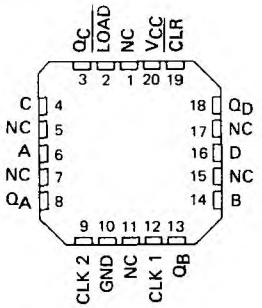

NC – No internal connection

description

These high-speed monolithic counters consist of four d-c coupled, master-slave flip-flops, which are internally interconnected to provide either a divide-by-two and a divide-by-five counter ('196, 'LS196, 'S196) or a divide-by-two and a divide-by-eight counter ('197, 'LS197, 'S197). These four counters are fully programmable; that is, the outputs may be preset to any state by placing a low on the count/load input and entering the desired data at the data inputs. The outputs will change to agree with the data inputs independent of the state of the clocks.

During the count operation, transfer of information to the outputs occurs on the negative-going edge of the clock pulse. These counters feature a direct clear which when taken low sets all outputs low regardless of the states of the clocks.

These counters may also be used as 4-bit latches by using the count/load input as the strobe and entering data at the data inputs. The outputs will directly follow the data inputs when the count/load is low, but will remain unchanged when the count/load is high and the clock inputs are inactive.

All inputs are diode-clamped to minimize transmission-line effects and simplify system design. These circuits are compatible with most TTL logic families. Series 54, 54LS, and 54S circuits are characterized for operation over the full military temperature range of −55°C to 125°C; Series 74, 74LS, and 74S circuits are characterized for operation from 0°C to 70°C.

logic symbols†

'196, 'LS196, 'S196

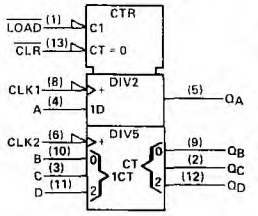

'197, 'LS197, 'S197

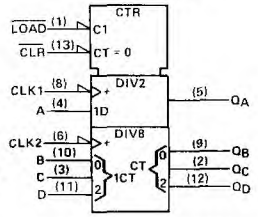

† These symbols are in accordance with ANSI/IEEE Std 91-1984 and IEC Publication 617-12.
Pin numbers shown are for D, J, N, and W packages.

PRODUCTION DATA documents contain information current as of publication date. Products conform to specifications per the terms of Texas Instruments standard warranty. Production processing does not necessarily include testing of all parameters.

typical count configurations

'196, 'LS196, and 'S196 typical count configurations and function tables are the same as those for '176.
'197, 'LS197, and 'S197 typical count configurations and function tables are the same as those for '177.

logic diagrams

'196, 'LS196, and 'S196 logic diagrams are the same as those for '176.
'197, 'LS197, and 'S197 logic diagrams are the same as those for '177.

schematics of inputs and outputs

EQUIVALENT OF LOAD, CLEAR, AND DATA INPUTS

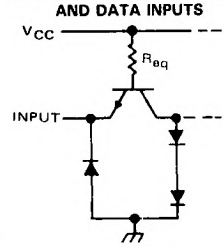

Count/load, Data: R_{eq} = 4 kΩ NOM
Clear: R_{eq} = 2 kΩ NOM

EQUIVALENT OF CLOCK INPUTS

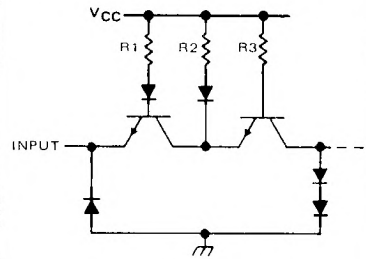

NOMINAL VALUES OF R1, R2, and R3

INPUT	'196	'197
Clock 1	4 kΩ	4 kΩ
Clock 2	3 kΩ	6 kΩ

TYPICAL OF ALL OUTPUTS

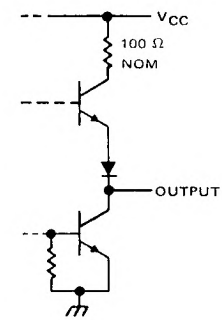

TEXAS INSTRUMENTS
POST OFFICE BOX 655012 • DALLAS, TEXAS 75265

absolute maximum ratings over operating free-air temperature range (unless otherwise noted)

Supply voltage, V_{CC} (see Note 1) . . . . . 7 V
Input voltage . . . . . 5.5 V
Interemitter voltage (see Note 2) . . . . . 5.5 V
Operating free-air temperature range: SN54196, SN54197 Circuits . . . . . −55°C to 125°C
SN74196, SN74197 Circuits . . . . . 0°C to 70°C
Storage temperature range . . . . . −65°C to 150°C

NOTES: 1. Voltage values are with respect to network ground terminal.
2. This is the voltage between two emitters of a multiple-emitter transistor. For this circuit, this rating applies between the Clear and Load inputs.

recommended operating conditions

		SN54196, SN54197			SN74196, SN74197			UNIT
		MIN	NOM	MAX	MIN	NOM	MAX	
Supply voltage, V_{CC}		4.5	5	5.5	4.75	5	5.25	V
High-level output current, I_{OH}				−400			−400	μA
Low-level output current, I_{OL}				16			16	mA
Count frequency	Clock-1 input	0		50	0		50	MHz
	Clock-2 input	0		25	0		25	
Pulse width, t_w	Clock-1 input	10			10			ns
	Clock-2 input	20			20			
	Clear	15			15			
	Load	20			20			
Input hold time, t_h (see Note 3)	High-level data	$t_{w(load)}$			$t_{w(load)}$			ns
	Low-level data	$t_{w(load)}$			$t_{w(load)}$			
Input setup time, t_{su} (see Note 3)	High-level data	10			10			ns
	Low-level data	15			15			
Count enable time, t_{en} (see Note 4)		20			20			ns
Operating free-air temperature, T_A		−55		125	0		70	°C

NOTES: 3. Setup and hold times are with respect to the falling edge of the load input.
4. Minimum count enable time is the interval immediately preceding the negative-going edge of the clock pulse during which interval the count/load and clear inputs must both be high to ensure counting.

electrical characteristics over recommended operating free-air temperature range (unless otherwise noted)

PARAMETER			TEST CONDITIONS†		SN54196, SN74196			SN54197, SN74197			UNIT
					MIN	TYP‡	MAX	MIN	TYP‡	MAX	
V_{IH}	High-level input voltage				2			2			V
V_{IL}	Low-level input voltage						0.8			0.8	V
V_{IK}	Input clamp voltage		V_{CC} = MIN, I_I = −12 mA				−1.5			−1.5	V
V_{OH}	High-level output voltage		V_{CC} = MIN, V_{IH} = 2 V, V_{IL} = 0.8 V, I_{OH} = −800 μA		2.4	3.4		2.4	3.4		V
V_{OL}	Low-level output voltage		V_{CC} = MIN, V_{IH} = 2 V, V_{IL} = 0.8 V, I_{OL} = 16 mA¶			0.2	0.4		0.2	0.4	V
I_I	Input current at maximum input voltage		V_{CC} = MAX, V_I = 5.5 V				1			1	mA
I_{IH}	High-level input current	Data, Load	V_{CC} = MAX, V_I = 2.4 V				40			40	μA
		Clear, clock 1					80			80	
		Clock 2					120			80	
I_{IL}	Low-level input current	Data, Load	V_{CC} = MAX, V_I = 0.4 V				−1.6			−1.6	mA
		Clear					−3.2			−3.2	
		Clock 1					−4.8			−4.8	
		Clock 2					−6.4			−3.2	
I_{OS}	Short-circuit output current§		V_{CC} = MAX	SN54'	−20		−57	−20		−57	mA
				SN74'	−18		−57	−18		−57	
I_{CC}	Supply current		V_{CC} = MAX, See Note 5			48	59		48	59	mA

NOTE 5: I_{CC} is measured with all inputs grounded and all outputs open.
†For conditions shown as MIN or MAX, use the appropriate value specified under recommended operating conditions.
‡All typical values are at V_{CC} = 5 V, T_A = 25°C.
§Not more than one output should be shorted at a time.
¶Q_A outputs are tested at I_{OL} = 16 mA plus the limit value of I_{IL} for the clock-2 input. This permits driving the clock-2 input while fanning out to 10 Series 54/74 loads.

switching characteristics, V_{CC} = 5 V, T_A = 25°C

PARAMETER#	FROM (INPUT)	TO (OUTPUT)	TEST CONDITIONS	SN54196 SN74196			SN54197 SN74197			UNIT
				MIN	TYP	MAX	MIN	TYP	MAX	
f_{max}	Clock 1	Q_A	C_L = 15 pF, R_L = 400 Ω, See Note 6	50	70		50	70		MHz
t_{PLH}	Clock 1	Q_A			7	12		7	12	ns
t_{PHL}					10	15		10	15	
t_{PLH}	Clock 2	Q_B			12	18		12	18	ns
t_{PHL}					14	21		14	21	
t_{PLH}	Clock 2	Q_C			24	36		24	36	ns
t_{PHL}					28	42		28	42	
t_{PLH}	Clock 2	Q_D			14	21		36	54	ns
t_{PHL}					12	18		42	63	
t_{PLH}	A, B, C, D	Q_A, Q_B, Q_C, Q_D			16	24		16	24	ns
t_{PHL}					25	38		25	38	
t_{PLH}	Load	Any			22	33		22	33	ns
t_{PHL}					24	36		24	36	
t_{PHL}	Clear	Any			25	37		25	37	ns

#f_{max} ≡ maximum count frequency.
t_{PLH} ≡ propagation delay time, low-to-high-level output.
t_{PHL} ≡ propagation delay time, high-to-low-level output.
NOTE 6: Load circuit, input conditions, and voltage waveforms are the same as those shown for the '176, '177 except that testing f_{max}, V_{IL} = 0.3 V.

TEXAS INSTRUMENTS
POST OFFICE BOX 655012 • DALLAS, TEXAS 75265

schematics of inputs and outputs

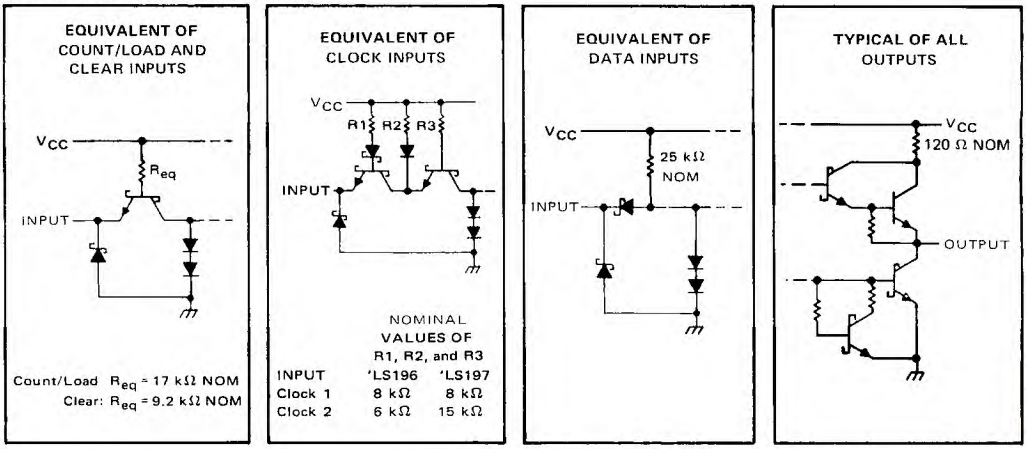

absolute maximum ratings over operating free-air temperature range (unless otherwise noted)

Supply voltage, V_{CC} (see Note 1) . . . . . 7 V
Input voltage . . . . . 5.5 V
Operating free-air temperature range: SN54LS196, SN54LS197 Circuits . . . . . −55°C to 125°C
SN74LS196, SN74LS197 Circuits . . . . . 0°C to 70°C
Storage temperature range . . . . . −65°C to 150°C

NOTE 1: Voltage values are with respect to network ground terminal.

recommended operating conditions

			SN54LS196			SN74LS196, SN74LS197			UNIT
			MIN	NOM	MAX	MIN	NOM	MAX	
V_{CC}	Supply voltage		4.5	5	5.5	4.75	5	5.25	V
I_{OH}	High-level output current				−400			−400	μA
I_{OL}	Low-level output current				4			8	mA
	Count frequency	Clock-1 input	0		30	0		30	MHz
		Clock-2 input	0		15	0		15	
t_w	Pulse width	Clock-1 input	20			20			ns
		Clock-2 input	30			30			
		Clear	15			15			
		Load	20			20			
t_h	Input hold time, (see Note 3)	High-level data	$t_{w(load)}$			$t_{w(load)}$			ns
		Low-level data	$t_{w(load)}$			$t_{w(load)}$			
t_{su}	Input setup time, (see Note 3)	High-level data	10			10			ns
		Low-level data	15			15			
t_{enable}	Count enable time, (see Note 4)	Clock 1	30			30			ns
		Clock 2	50			50			
T_A	Operating free-air temperature		−55		125	0		70	°C

NOTES: 3. Setup and hold times are with respect to the falling edge of the load input.
4. Minimum count enable time is the interval immediately preceding the negative-going edge of the clock pulse during which interval the count/load and clear inputs must both be high to ensure counting.

electrical characteristics over recommended operating free-air temperature range (unless otherwise noted)

PARAMETER		TEST CONDITIONS†		SN54LS196 SN54LS197			SN74LS196 SN74LS197			UNIT
				MIN	TYP‡	MAX	MIN	TYP‡	MAX	
V_{IH} High-level input voltage				2			2			V
V_{IL} Low-level input voltage						0.7			0.8	V
V_{IK} Input clamp voltage		V_{CC} = MIN, I_I = −18 mA				−1.5			−1.5	V
V_{OH} High-level output voltage		V_{CC} = MIN, V_{IH} = 2 V, V_{IL} = $V_{IL\ max}$, I_{OH} = −400 μA		2.5	3.4		2.7	3.4		V
V_{OL} Low-level output voltage		V_{CC} = MIN, V_{IH} = 2 V, V_{IL} = $V_{IL\ max}$	I_{OL} = 4 mA¶		0.25	0.4		0.25	0.4	V
			I_{OL} = 8 mA¶					0.35	0.5	
I_I Input current at maximum input voltage	Data, Load	V_{CC} = MAX, V_I = 5.5 V				0.1			0.1	mA
	Clear, clock 1					0.2			0.2	
	Clock 2 of 'LS196					0.4			0.4	
	Clock 2 of 'LS197					0.2			0.2	
I_{IH} High-level input current	Data, Load	V_{CC} = MAX, V_I = 2.7 V				20			20	μA
	Clear, clock 1					40			40	
	Clock 2 of 'LS196					80			80	
	Clock 2 of 'LS197					40			40	
I_{IL} Low-level input current	Data, Load	V_{CC} = MAX, V_I = 0.4 V				−0.4			−0.4	mA
	Clear					−0.8			−0.8	
	Clock 1					−2.4			−2.4	
	Clock 2 of 'LS196					−2.8			−2.8	
	Clock 2 of 'LS197					−1.3			−1.3	
I_{OS} Short-circuit output current§		V_{CC} = MAX		−20		−100	−20		−100	mA
I_{CC} Supply current		V_{CC} = MAX, See Note 5			16	27		16	27	mA

†For conditions shown as MIN or MAX, use the appropriate value specified under recommended operating conditions.
‡All typical values are at V_{CC} = 5 V, T_A = 25°C.
§Not more than one output should be shorted at a time, and duration of the short-circuit should not exceed one second.
¶Q_A outputs are tested at specified I_{OL} plus the limit value of I_{IL} for the clock-2 input. This permits driving the clock-2 input while maintaining full fan-out capability.
NOTE 5. I_{CC} is measured with all inputs grounded and all outputs open.

switching characteristics, V_{CC} = 5 V, T_A = 25°C

PARAMETER#	FROM (INPUT)	TO (OUTPUT)	TEST CONDITIONS	SN54LS196 SN74LS196			SN54LS197 SN74LS197			UNIT
				MIN	TYP	MAX	MIN	TYP	MAX	
f_{max}	Clock 1	Q_A	C_L = 15 pF, R_L = 2 kΩ, See Note 6	30	40		30	40		MHz
t_{PLH}	Clock 1	Q_A			8	15		8	15	ns
t_{PHL}					13	20		14	21	
t_{PLH}	Clock 2	Q_B			16	24		12	19	ns
t_{PHL}					22	33		23	35	
t_{PLH}	Clock 2	Q_C			38	57		34	51	ns
t_{PHL}					41	62		42	63	
t_{PLH}	Clock 2	Q_D			12	18		55	78	ns
t_{PHL}					30	45		63	95	
t_{PLH}	A, B, C, D	Q_A, Q_B, Q_C Q_D			20	30		18	27	ns
t_{PHL}					29	44		29	44	
t_{PLH}	Load	Any			27	41		26	39	ns
t_{PHL}					30	45		30	45	
t_{PHL}	Clear	Any			34	51		34	51	ns

#f_{max} = maximum count frequency.
t_{PLH} = propagation delay time, low-to-high-level output, t_{PHL} = propagation delay time, high-to-low-level output.
NOTE 6: Load circuit, input conditions, and voltage waveforms are the same as those shown for the '176, '177 except that $t_r \le 15$ ns, $t_f \le 6$ ns, and V_{ref} = 1.3 V (as opposed to 1.5 V).

TEXAS INSTRUMENTS
POST OFFICE BOX 655012 • DALLAS, TEXAS 75265

schematics of inputs and outputs

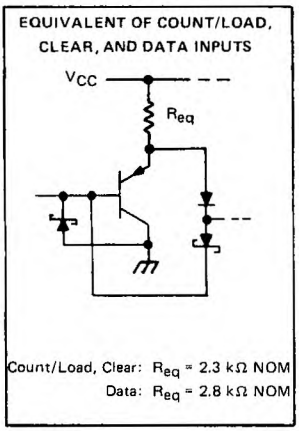

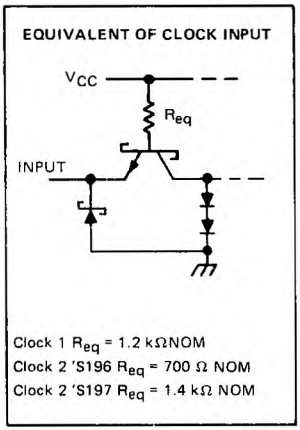

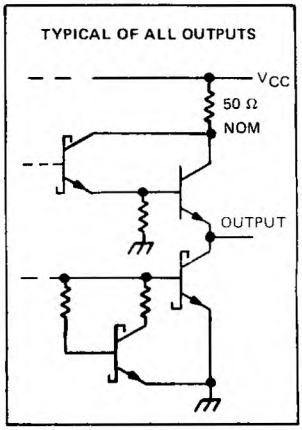

absolute maximum ratings over operating free-air temperature range (unless otherwise noted)

Supply voltage, V_{CC} (see Note 1) . . . . . 7 V
Input voltage . . . . . 5.5 V
Operating free-air temperature range: SN54S196, SN54S197 Circuits . . . . . −55°C to 125°C
SN74S196, SN74S197 Circuits . . . . . 0°C to 70°C
Storage temperature range . . . . . −65°C to 150°C

NOTE 1. Voltage values are with respect to network ground terminal.

recommended operating conditions

		SN54S196, SN54S197			SN74S196, SN74S197			UNIT
		MIN	NOM	MAX	MIN	NOM	MAX	
Supply voltage, V_{CC}		4.5	5	5.5	4.75	5	5.25	V
High-level output current, I_{OH}				−1			−1	mA
Low-level output current, I_{OL}				20			20	mA
Clock frequency	Clock-1 input	0		100	0		100	MHz
	Clock-2 input	0		50	0		50	
Pulse width, t_w	Clock-1 input	5			5			ns
	Clock-2 input	10			10			
	Clear	30			30			
	Load	5			5			
Input hold time, t_h (see Note 3)	High-level data	3‡			3‡			ns
	Low-level data	3‡			3‡			
Input setup time, t_{su} (see Note 3)	High-level data	6‡			6‡			ns
	Low-level data	6‡			6‡			
Count enable time, t_{en} (see Note 4)		12			12			ns
Operating free-air temperature, T_A		−55		125	0		70	°C

NOTES: 3. Setup and hold times are with respect to the falling edge of the load input.
4. Minimum count enable time is the interval immediately preceding the negative-going edge of the clock pulse during which interval the count/load and clear inputs must both be high to ensure counting.

electrical characteristics over recommended operating free-air temperature range (unless otherwise noted)

PARAMETER		TEST CONDITIONS †			SN54S196, SN74S196			SN54S197, SN74S197			UNIT
					MIN	TYP‡	MAX	MIN	TYP‡	MAX	
V_{IH}					2			2			V
V_{IL}							0.8			0.8	V
V_{IK}		V_{CC} = MIN,	I_I = −18 mA				−1.2			−1.2	V
V_{OH}		V_{CC} = MIN, V_{IL} = 0.8 V,	V_{IH} = 2 V, I_{OH} = −1 mA	54S	2.5	3.4		2.5	3.4		V
				74S	2.7	3.4		2.7	3.4		
V_{OL}		V_{CC} = MIN, I_{OL} = 20 mA¶	V_{IH} = 2 V, V_{IL} = 0.8 V,				0.5			0.5	V
I_I		V_{CC} = MAX,	V_I = 5.5 V				1			1	mA
I_{IH}	Clock 1, clock 2	V_{CC} = MAX,	V_I = 2.7 V				150			150	μA
	All other inputs						50			50	
I_{IL}	Data, Load Clear	V_{CC} = MAX,	V_I = 0.5V				−0.75			−0.75	mA
	Clock 1						−8			−8	mA
	Clock 2						−10			−6	mA
I_{OS}§		V_{CC} = MAX			−30		−110	−30		−110	mA
I_{CC}		V_{CC} = MAX,	See Note 5	54S		75	110		75	110	mA
				74S		75	120		75	120	

† For conditions shown as MIN or MAX, use the appropriate value specified under recommended operating conditions.
‡ All typical values are at V_{CC} = 5 V, T_A = 25°C.
¶ Q_A outputs are tested at I_{OL} = 20 mA plus the limit value of I_{IL} for the clock-2 input. This permits driving the clock-2 input while fanning out to 10 Series 54S/74S loads.
§ Not more than one output should be shorted at a time, and duration of the short-circuit should not exceed one second.
NOTE 5. I_{CC} is measured with all input grounded and all outputs open.

switching characteristics, V_{CC} = 5 V, T_A = 25°C

PARAMETER#	(FROM (INPUT)	TO (OUTPUT)	TEST CONDITIONS	SN54S196, SN74S196			SN54S197 SN74S197			UNIT
				MIN	TYP	MAX	MIN	TYP	MAX	
f_{max}	Clock 1	Q_A	R_L = 280 Ω, C_L = 15 pF See Note 7	100	140		100	140		MHz
t_{PLH}	Clock 1	Q_A			5	10		5	10	ns
t_{PHL}					6	10		6	10	
t_{PLH}	Clock 2	Q_B			5	10		5	10	ns
t_{PHL}					8	12		8	12	
t_{PLH}	Clock 2	Q_C			12	18		12	18	ns
t_{PHL}					16	24		15	22	
t_{PLH}	Clock 2	Q_D			5	10		18	27	ns
t_{PHL}					8	12		22	33	
t_{PLH}	A,B,C,D	Q_A,Q_B,Q_C,Q_D			7	12		7	12	ns
t_{PHL}					12	18		12	18	
t_{PLH}	Load	Any			10	18		10	18	ns
t_{PHL}					12	18		12	18	
t_{PHL}	Clear	Any			26	37		26	37	ns

#f_{max} ≡ maximum count frequency.
t_{PLH} ≡ propagation delay time, low-to-high-level output.
t_{PHL} ≡ propagation delay time, high-to-low-level output.
NOTE 7: Load circuit, input conditions, and voltage waveforms are the same as those shown in Section 1

TEXAS INSTRUMENTS
POST OFFICE BOX 655012 • DALLAS, TEXAS 75265

DECEMBER 1972—REVISED MARCH 1988

description

These 8-bit shift registers are compatible with most other TTL and MSI logic families. All inputs are buffered to lower the drive requirements to one normalized Series 54/74 load, and input clamping diodes minimize switching transients to simplify system design. Maximum input clock frequency is typically 35 megahertz and power dissipation is typically 360 mW.

Series 54 devices are characterized for operation over the full military temperature range of −55°C to 125°C; Series 74 devices are characterized for operation from 0°C to 70°C.

SN54198 . . . J OR W PACKAGE
SN74198 . . . N PACKAGE
(TOP VIEW)

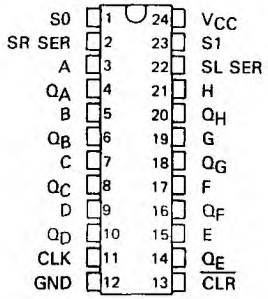

SN54198 and SN74198

These bidirectional registers are designed to incorporate virtually all of the features a system designer may want in a shift register. These circuits contain 87 equivalent gates and feature parallel inputs, parallel outputs, right-shift and left-shift serial inputs, operating-mode-control inputs, and a direct overriding clear line. The register has four distinct modes of operation, namely:

Inhibit Clock (Do nothing)
Shift Right (In the direction Q_A toward Q_H)
Shift Left (In the direction Q_H toward Q_A)
Parallel (Broadside) Load

Synchronous parallel loading is accomplished by applying the eight bits of data and taking both mode control inputs, S0 and S1, high. The data is loaded into the associated flip-flop and appears at the outputs after the positive transition of the clock input. During loading, serial data flow is inhibited.

Shift right is accomplished synchronously with the rising edge of the clock pulse when S0 is high and S1 is low. Serial data for this mode is entered at the shift-right data input. When S0 is low and S1 is high, data shifts left synchronously and new data is entered at the shift-left serial input.

Clocking of the flip-flop is inhibited when both mode control inputs are low. The mode controls should be changed only while the clock input is high.

'198

FUNCTION TABLE

INPUTS							OUTPUTS				
$\overline{CLEAR}$	MODE		CLOCK	SERIAL		PARALLEL	Q_A	Q_B	...	Q_G	Q_H
	S_1	S_0		LEFT	RIGHT	A . . . H					
L	X	X	X	X	X	X	L	L		L	L
H	X	X	L	X	X	X	Q_{A0}	Q_{B0}		Q_{G0}	Q_{H0}
H	H	H	↑	X	X	a . . h	a	b		g	h
H	L	H	↑	X	H	X	H	Q_{An}		Q_{Fn}	Q_{Gn}
H	L	H	↑	X	L	X	L	Q_{An}		Q_{Fn}	Q_{Gn}
H	H	L	↑	H	X	X	Q_{Bn}	Q_{Cn}		Q_{Hn}	H
H	H	L	↑	L	X	X	Q_{Bn}	Q_{Cn}		Q_{Hn}	L
H	L	L	X	X	X	X	Q_{A0}	Q_{B0}		Q_{G0}	Q_{H0}

H = high level (steady state), L = low level (steady state)
X = irrelevant (any input, including transitions)
↑ = transition from low to high level
a . . . h = the level of steady-state input at inputs A thru H, respectively.
Q_{A0}, Q_{B0}, Q_{G0}, Q_{H0} = the level of Q_A, Q_B, Q_G, or Q_H, respectively, before the indicated steady-state input conditions were established.
Q_{An}, Q_{Bn}, etc. = the level of Q_A, Q_B, etc., respectively, before the most-recent ↑ transition of the clock.

PRODUCTION DATA documents contain information current as of publication date. Products conform to specifications per the terms of Texas Instruments standard warranty. Production processing does not necessarily include testing of all parameters.

SN54199 and SN74199

SN54199 . . . J OR W PACKAGE
SN74199 . . . N PACKAGE
(TOP VIEW)

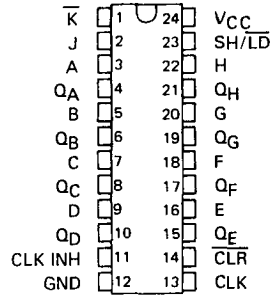

These registers feature parallel inputs, parallel outputs, J-$\overline{K}$ serial inputs, shift/load control input, a direct overriding clear line, and gated clock inputs. The register has three modes of operation:

Inhibit Clock (Do nothing)
Shift (In the direction Q_A toward Q_H)
Parallel (Broadside) Load

Parallel loading is accomplished by applying the eight bits of data and taking the shift/load control input low when the clock input is not inhibited. The data is loaded into the associated flip-flop and appears at the outputs after the positive transition of the clock input. During loading, serial data flow is inhibited.

Shifting is accomplished synchronously when shift/load is high and the clock input is not inhibited. Serial data for this mode is entered at the J-$\overline{K}$ inputs. See the function table for levels required to enter serial data into the first flip-flop.

Both of the clock inputs are identical in function and may be used interchangeably to serve as clock or clock-inhibit inputs. Holding either high inhibits clocking, but when one is held low, a clock input applied to the other input is passed to the eight flip-flops of the register. The clock-inhibit input should be changed to the high level only while the clock input is high.

These shift registers contain the equivalent of 79 TTL gates. Average power dissipation per gate is typically 4.55 mW.

'199
FUNCTION TABLE

INPUTS							OUTPUTS			
$\overline{CLEAR}$	SHIFT/$\overline{LOAD}$	CLOCK INHIBIT	CLOCK	SERIAL J	SERIAL $\overline{K}$	PARALLEL A . . . H	Q_A	Q_B	Q_C . . .	Q_H
L	X	X	X	X	X	X	L	L	L	L
H	X	L	L	X	X	X	Q_{A0}	Q_{B0}	Q_{C0}	Q_{H0}
H	L	L	↑	X	X	a . . . h	a	b	c	h
H	H	L	↑	L	H	X	Q_{A0}	Q_{A0}	Q_{Bn}	Q_{Gn}
H	H	L	↑	L	L	X	L	Q_{An}	Q_{Bn}	Q_{Gn}
H	H	L	↑	H	H	X	H	Q_{An}	Q_{Bn}	Q_{Gn}
H	H	L	↑	H	L	X	$\overline{Q}_{An}$	Q_{An}	Q_{Bn}	Q_{Gn}
H	X	H	↑	X	X	X	Q_{A0}	Q_{B0}	Q_{B0}	Q_{H0}

schematics of inputs and outputs

EQUIVALENT OF EACH INPUT

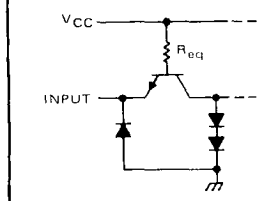

Clear, A thru H: R_{eq} = 6 kΩ NOM
All others R_{eq} = 4 kΩ NOM

TYPICAL OF ALL OUTPUTS

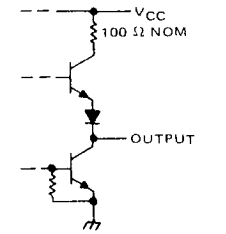

TEXAS INSTRUMENTS
POST OFFICE BOX 655012 • DALLAS, TEXAS 75265

logic symbol†

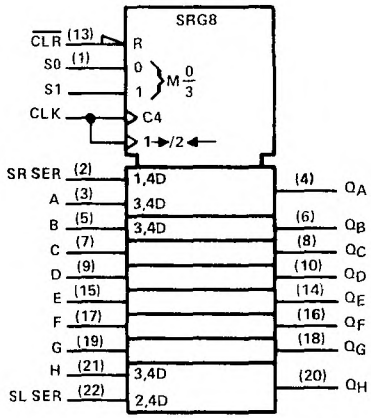

† This symbol is in accordance with ANSI/IEEE Std. 91-1984 and IEC Publication 617-12.

logic diagram (positive logic)

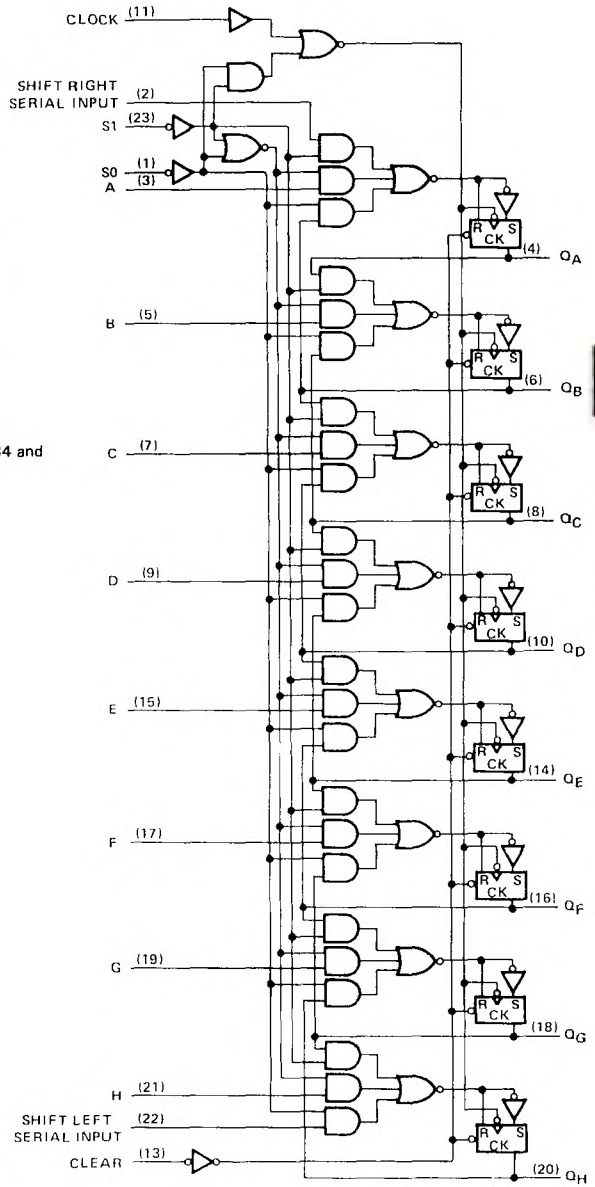

logic symbol†

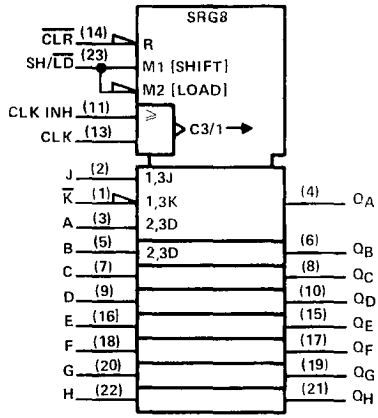

† This symbol is in accordance with ANSI/IEEE Std. 91-1984 and IEC Publication 617-12.

logic diagram (positive logic)

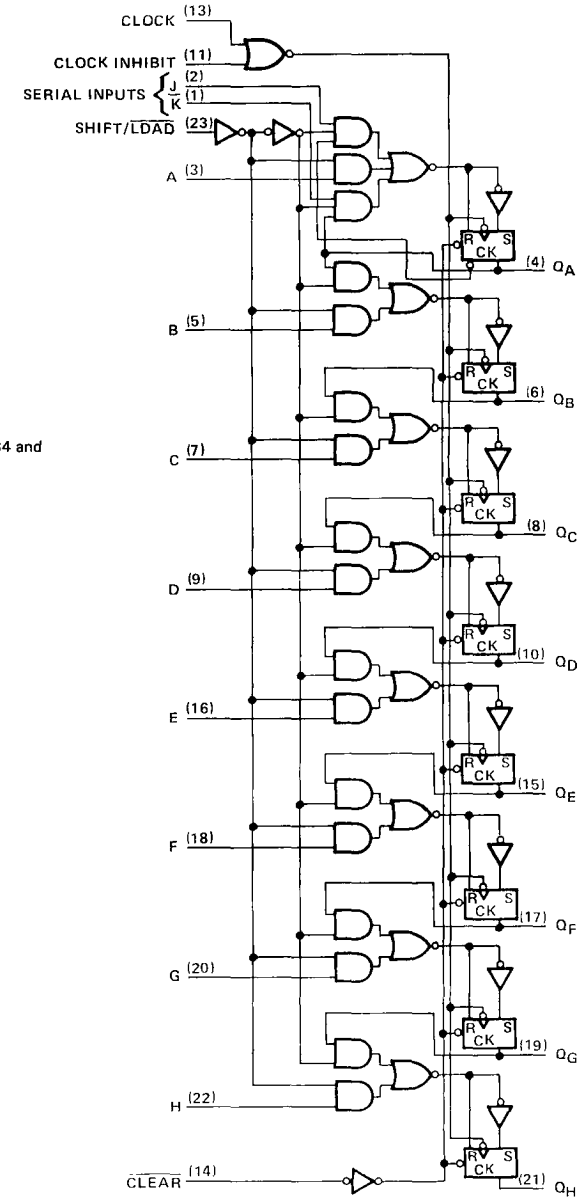

TEXAS INSTRUMENTS
POST OFFICE BOX 655012 • DALLAS, TEXAS 75265

SN54198, SN74198

typical clear, load, right-shift, left-shift, inhibit, and clear sequences

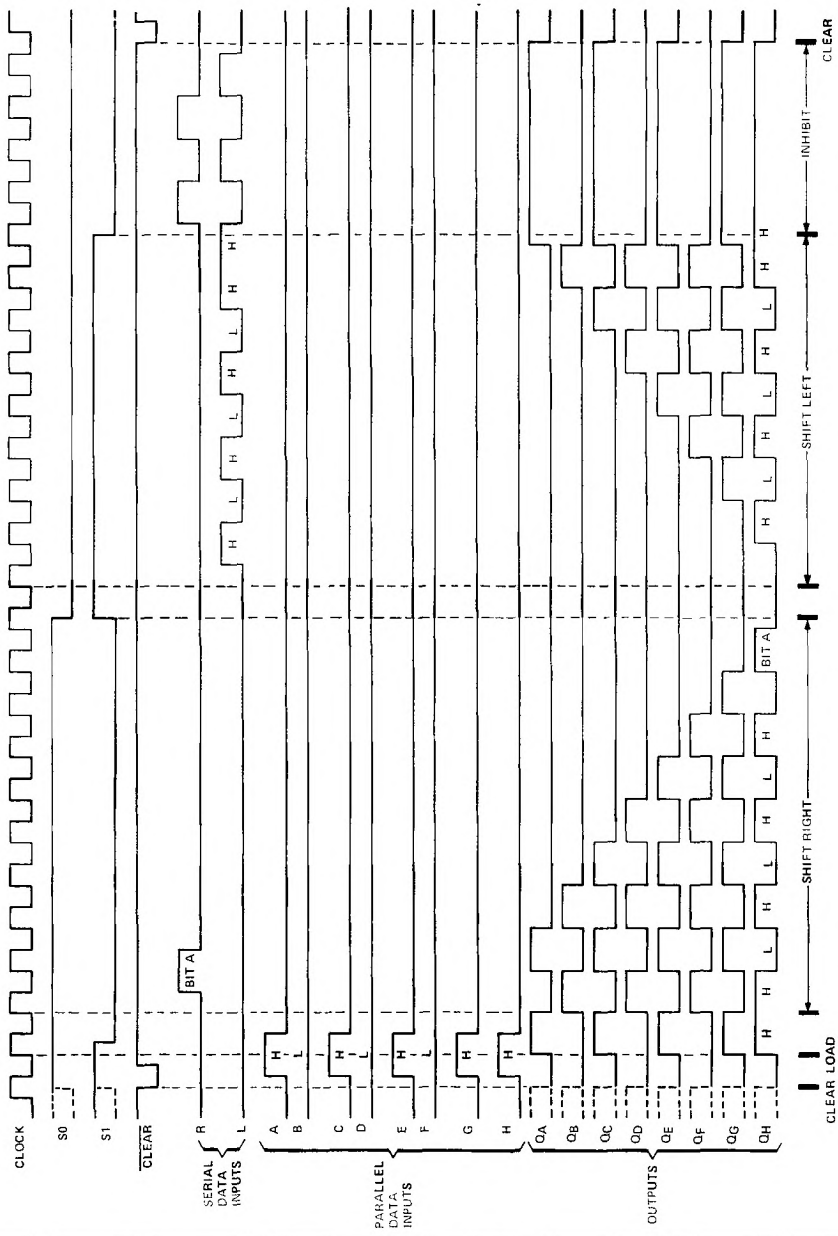

typical clear, shift, load, and inhibit sequences

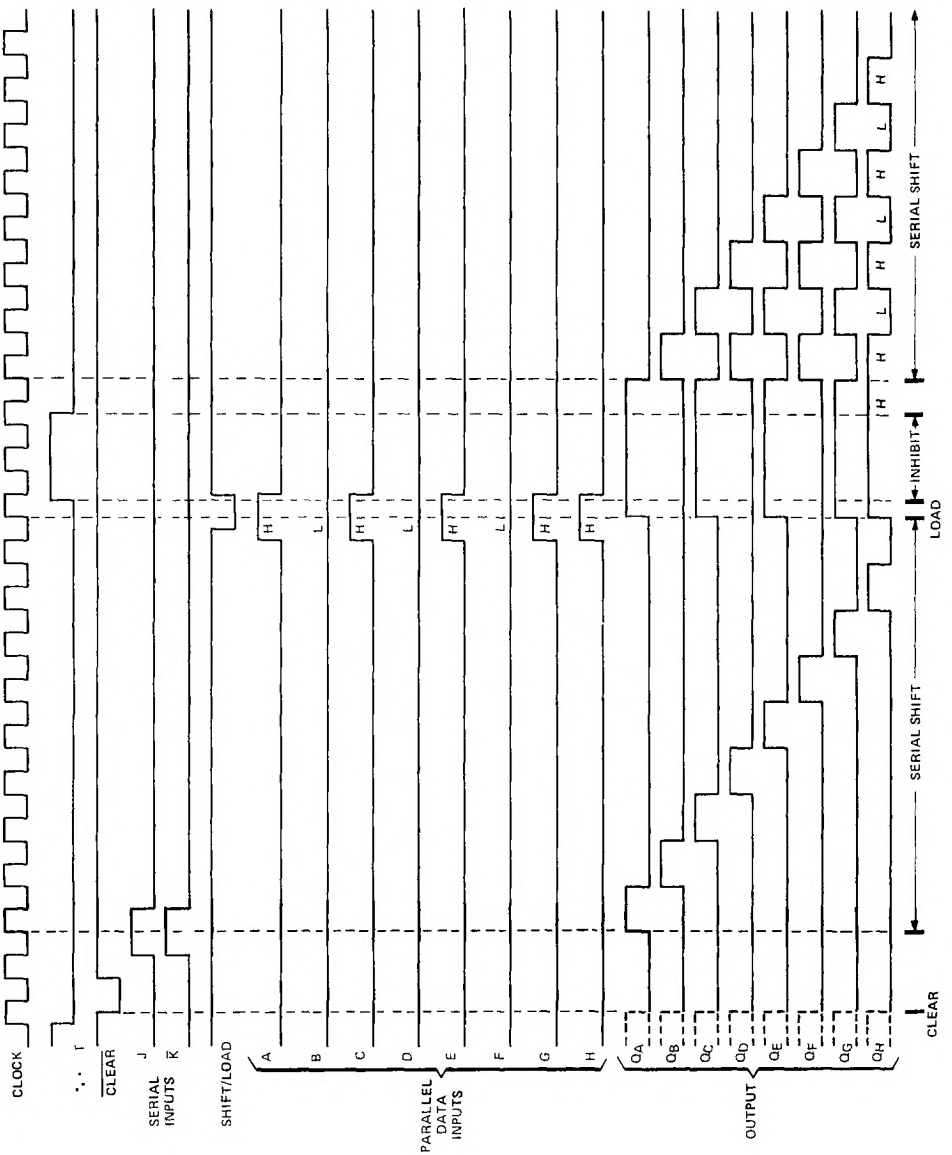

TEXAS INSTRUMENTS
POST OFFICE BOX 655012 • DALLAS, TEXAS 75265

absolute maximum ratings over operating free-air temperature range (unless otherwise noted)

Supply voltage, V_{CC} (see Note 1) . . . . . 7 V
Input voltage . . . . . 5.5 V
Operating free-air temperature range: SN54' Circuits . . . . . −55°C to 125°C
SN74' Circuits . . . . . 0°C to 70°C
Storage temperature range . . . . . −65°C to 150°C

NOTE 1: Voltage values are with respect to network ground terminal.

recommended operating conditions

	SN54198 SN54199			SN74198 SN74199			UNIT
	MIN	NOM	MAX	MIN	NOM	MAX	
Supply voltage, V_{CC}	4.5	5	5.5	4.75	5	5.25	V
High-level output current, I_{OH}			−800			−800	μA
Low-level output current, I_{OL}			16			16	mA
Clock frequency, f_{clock}	0		25	0		25	MHz
Width of clock or clear pulse, t_w (see Figure 1)	20			20			ns
Mode-control setup time, t_{su}	30			30			ns
Data setup time, t_{su} (see Figure 1)	20			20			ns
Hold time at any input, t_h (see Figure 1)	0			0			ns
Operating free-air temperature, T_A	−55		125	0		70	°C

electrical characteristics over recommended operating free-air temperature range (unless otherwise noted)

PARAMETER		TEST CONDITIONS†	SN54198 SN54199			SN74198 SN74199			UNIT
			MIN	TYP‡	MAX	MIN	TYP‡	MAX	
V_{IH}	High-level input voltage		2			2			V
V_{IL}	Low-level input voltage				0.8			0.8	V
V_{IK}	Input clamp voltage	V_{CC} = MIN, I_I = −12 mA			−1.5			−1.5	V
V_{OH}	High-level output voltage	V_{CC} = MIN, V_{IH} = 2 V, V_{IL} = 0.8 V, I_{OH} = −800 μA	2.4	3.4		2.4	3.4		V
V_{OL}	Low-level output voltage	V_{CC} = MIN, V_{IH} = 2 V, V_{IL} = 0.8 V, I_{OL} = 16 mA		0.2	0.4		0.2	0.4	V
I_I	Input current at maximum input voltage	V_{CC} = MAX, V_I = 5.5 V			1			1	mA
I_{IH}	High-level input current	V_{CC} = MAX, V_I = 2.4 V			40			40	μA
I_{IL}	Low-level input current	V_{CC} = MAX, V_I = 0.4 V			−1.6			−1.6	mA
I_{OS}	Short-circuit output current§	V_{CC} = MAX	−20		−57	−18		−57	mA
I_{CC}	Supply current	V_{CC} = MAX, See Table Below		90	127		90	127	mA

†For conditions shown as MIN or MAX, use the appropriate value specified under recommended operating conditions.
‡All typical values are at V_{CC} = 5 V, T_A = 25°C
§Not more than one output should be shorted at a time.

TEST CONDITIONS FOR I_{CC}
(ALL OUTPUTS ARE OPEN)

TYPE	APPLY 4.5 V	FIRST GROUND, THEN APPLY 4.5 V	GROUND
SN54198, SN74198	Serial Input, S_0, S_1	Clock	$\overline{\text{Clear}}$, Inputs A thru H
SN54199, SN74199	J, $\overline{K}$, Inputs A thru H	Clock	Clock inhibit, Clear, Shift/$\overline{\text{Load}}$

switching characteristics, V_{CC} = 5 V, T_A = 25°C

PARAMETER		TEST CONDITIONS	MIN	TYP	MAX	UNIT
f_{max}	Maximum clock frequency	C_L = 15 pF, R_L = 400 Ω, See Figure 1	25	35		MHz
t_{PHL}	Propagation delay time, high-to-low-level output from clear			23	35	ns
t_{PHL}	Propagation delay time, high-to-low-level output from clock			20	30	ns
t_{PLH}	Propagation delay time, low-to-high-level output from clock			17	26	ns

TEXAS INSTRUMENTS
POST OFFICE BOX 655012 • DALLAS, TEXAS 75265

PARAMETER MEASUREMENT INFORMATION

SN54198, SN74198

TEST TABLE FOR SYNCHRONOUS INPUTS

DATA INPUT FOR TEST	S1	S0	OUTPUT TESTED (SEE NOTE E)
A	4.5 V	4.5 V	Q_A at t_{n+1}
B	4.5 V	4.5 V	Q_B at t_{n+1}
C	4.5 V	4.5 V	Q_C at t_{n+1}
D	4.5 V	4.5 V	Q_D at t_{n+1}
E	4.5 V	4.5 V	Q_E at t_{n+1}
F	4.5 V	4.5 V	Q_F at t_{n+1}
G	4.5 V	4.5 V	Q_G at t_{n+1}
H	4.5 V	4.5 V	Q_H at t_{n+1}
L Serial Input	4.5 V	0 V	Q_A at t_{n+8}
R Serial Input	0 V	4.5 V	Q_H at t_{n+8}

SN54199, SN74199

TEST TABLE FOR SYNCHRONOUS INPUTS

DATA INPUT FOR TEST	SHIFT/$\overline{\text{LOAD}}$	OUTPUT TESTED (SEE NOTE E)
A	0 V	Q_A at t_{n+1}
B	0 V	Q_B at t_{n+1}
C	0 V	Q_C at t_{n+1}
D	0 V	Q_D at t_{n+1}
E	0 V	Q_E at t_{n+1}
F	0 V	Q_F at t_{n+1}
G	0 V	Q_G at t_{n+1}
H	0 V	Q_H at t_{n+1}
J and $\overline{\text{K}}$	4.5 V	Q_H at t_{n+8}

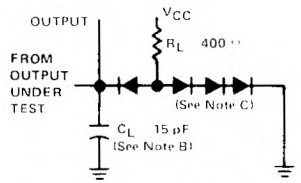

LOAD FOR OUTPUT UNDER TEST

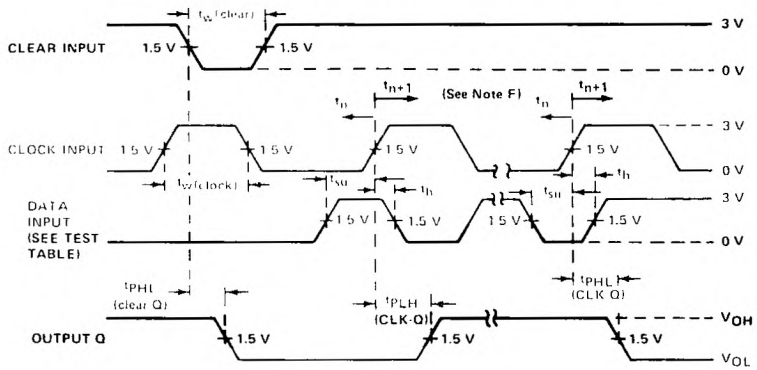

VOLTAGE WAVEFORMS

NOTES
A. The clock pulse has the following characteristics: $t_{w(clock)}$ = 20 ns and PRR = 1 MHz. The clear pulse has the following characteristics $t_{w(clear)}$ = 20 ns and t_{hold} = 0 ns. When testing f_{max}, vary the clock PRR.
B. C_L includes probe and jig capacitance.
C. All diodes are 1N3064.
D. A clear pulse is applied prior to each test.
E. Propagation delay times (t_{PLH} and t_{PHL}) are measured at t_{n+1}. Proper shifting of data is verified at t_{n+8} with a functional test.
F. t_n = bit time before clocking transition
t_{n+1} = bit time after one clocking transition
t_{n+8} = bit time after eight clocking transitions

FIGURE 1

- **SN54221, SN54LS221, SN74221 and SN74LS221 Are Dual Versions of Highly Stable SN54121, SN74121 One-Shots on a Monolithic Chip**
- **SN54221 and SN74221 Demonstrate Electrical and Switching Characteristics That Are Virtually Identical to the SN54121, SN74121 One-Shots**
- **Pin-Out Is Identical to the SN54123, SN74123, SN54LS123, SN74LS123**
- **Overriding Clear Terminates Output Pulse**

TYPE	TYPICAL POWER DISSIPATION	MAXIMUM OUTPUT PULSE LENGTH
SN54221	130 mW	21 s
SN74221	130 mW	28 s
SN54LS221	23 mW	49 s
SN74LS221	23 mW	70 s

SN54221, SN54LS221 . . . J OR W PACKAGE
SN74221 . . . N PACKAGE
SN74LS221 . . . D OR N PACKAGE
(TOP VIEW)

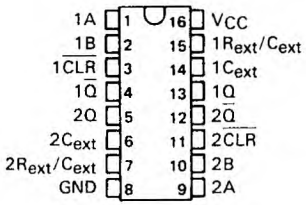

SN54LS221 . . . FK PACKAGE
(TOP VIEW)

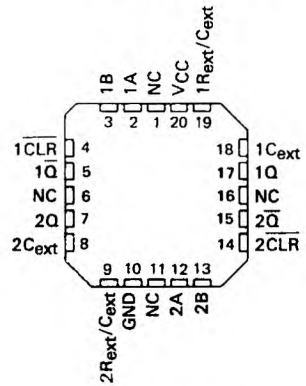

description

The '221 and 'LS221 are monolithic dual multivibrators with performance characteristics virtually identical to those of the '121. Each multivibrator features a negative-transition-triggered input and a positive-transition-triggered input either of which can be used as an inhibit input.

Pulse triggering occurs at a particular voltage level and is not directly related to the transition time of the input pulse. Schmitt-trigger input circuitry (TTL hysteresis) for B input allows jitter-free triggering from inputs with transition rates as slow as 1 volt/second, providing the circuit with excellent noise immunity of typically 1.2 volts. A high immunity to V_{CC} noise of typically 1.5 volts is also provided by internal latching circuitry.

Once fired, the outputs are independent of further transitions of the A and B inputs and are a function of the timing components, or the output pulses can be terminated by the overriding clear. Input pulses may be of any duration relative to the output pulse. Output pulse length may be varied from 35 nanoseconds to the maximums shown in the above table by choosing appropriate timing components. With R_{ext} = 2 kΩ and C_{ext} = 0, an output pulse of typically 30 nanoseconds is achieved which may be used as a d-c-triggered reset signal. Output rise and fall times are TTL compatible and independent of pulse length. Typical triggering and clearing sequences are illustrated as a part of the switching characteristics waveforms.

FUNCTION TABLE
(EACH MONOSTABLE)

INPUTS			OUTPUTS	
CLEAR	A	B	Q	$\overline{Q}$
L	X	X	L	H
X	H	X	L	H
X	X	L	L	H
H	L	↑	⊓‡	⊔‡
H	↓	H	⊓‡	⊔‡
↑†	L	H	⊓‡	⊔‡
Also see description and switching characteristics				

†This condition is true only if the output of the latch formed by the two NAND gates has been conditioned to the logic 1 state prior to CLR going high. This latch is conditioned by taking either A high or B low while $\overline{CLR}$ is inactive (high).

‡Pulsed output patterns are tested during AC switching at 25°C, with R_{ext} = 2 kΩ, C_{ext} = 80 pF.

PRODUCTION DATA documents contain information current as of publication date. Products conform to specifications per the terms of Texas Instruments standard warranty. Production processing does not necessarily include testing of all parameters.

description (continued)

Pulse width stability is achieved through internal compensation and is virtually independent of V_{CC} and temperature. In most applications, pulse stability will only be limited by the accuracy of external timing components.

Jitter-free operation is maintained over the full temperature and V_{CC} ranges for more than six decades of timing capacitance (10 pF to 10 μF) and more than one decade of timing resistance (2 kΩ to 30 kΩ for the SN54221, 2 kΩ to 40 kΩ for the SN74221, 2 kΩ to 70 kΩ for the SN54LS221, and 2 kΩ to 100 kΩ for the SN74LS221). Throughout these ranges, pulse width is defined by the relationship: $t_w(out) = C_{ext}R_{ext}\ ln2 \approx 0.7\ C_{ext}R_{ext}$. In circuits where pulse cutoff is not critical, timing capacitance up to 1000 μF and timing resistance as low as 1.4 kΩ may be used. Also, the range of jitter-free output pulse widths is extended if V_{CC} is held to 5 volts and free-air temperature is 25°C. Duty cycles as high as 90% are achieved when using maximum recommended R_T. Higher duty cycles are available if a certain amount of pulse-width jitter is allowed.

The variance in output pulse width from device to device is typically less than ± 0.5% for given external timing components. An example of this distribution for the '221 is shown in Figure 2. Variations in output pulse width versus supply voltage and temperature for the '221 are shown in Figure 3 and 4, respectively.

Pin assignments for these devices are identical to those of the SN54123/SN74123 or SN54LS123/SN74LS123 so that the '221 or 'LS221 can be substituted for those products in systems not using the retrigger by merely changing the value of R_{ext} and/or C_{ext}, however the polarity of the capacitor will have to be changed.

TIMING COMPONENT CONNECTIONS

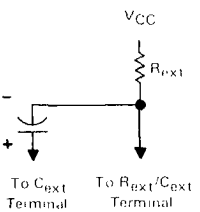

NOTE: Due to the internal circuit, the R_{ext}/C_{ext} pin will never be more positive than the C_{ext} pin.
Pin numbers shown are for D, J, N, and W packages.

logic symbol†

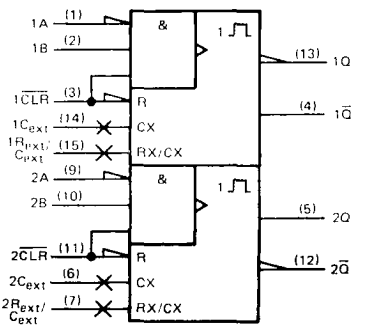

†This symbol is in accordance with ANSI/IEEE Std. 91-1984 and IEC Publication 617-12.

schematics of inputs and outputs

'221

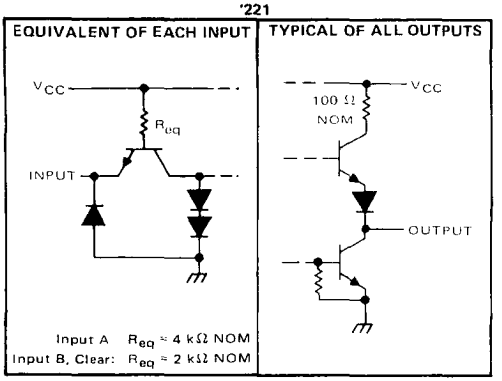

'LS221

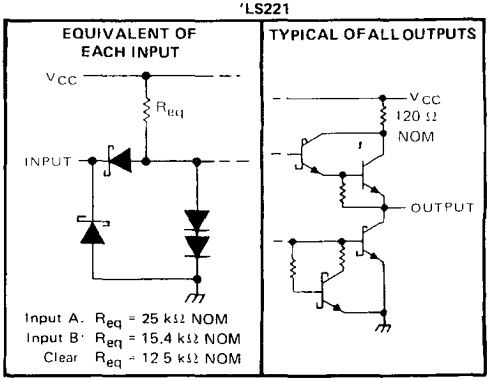

TEXAS INSTRUMENTS
POST OFFICE BOX 655012 • DALLAS, TEXAS 75265

recommended operating conditions

		SN54221			SN74221			UNIT
		MIN	NOM	MAX	MIN	NOM	MAX	
Supply voltage, V_{CC}		4.5	5	5.5	4.75	5	5.25	V
High-level input voltage at A input, V_{IH}		2			2			V
Low-level input voltage at A input, V_{IL}				0.8			0.8	V
High-level output current, I_{OH}				−800			−800	μA
Low-level output current, I_{OL}				16			16	mA
Rate of rise or fall of input pulse, dv/dt	Schmitt input, B	1			1			V/s
	Logic input, A	1			1			V/μs
Input pulse width	A or B, $t_{w(in)}$	50			50			ns
	Clear, $t_{w(clear)}$	20			20			
Clear-inactive-state setup time, t_{su}		15			15			ns
External timing resistance, R_{ext}		1.4		30	1.4		40	kΩ
External timing capacitance, C_{ext}		0		1000	0		1000	μF
Output duty cycle	R_{ext} = 2 kΩ			67			67	%
	R_{ext} = MAX R_{ext}			90			90	
Operating free-air temperature, T_A		−55			0		70	°C

electrical characteristics over recommended operating free-air temperature range (unless otherwise noted)

PARAMETER		TEST CONDITIONS†		MIN	TYP‡	MAX	UNIT
V_{T+}	Positive-going threshold voltage at B input	V_{CC} = MIN			1.55	2	V
V_{T-}	Negative-going threshold voltage at B input	V_{CC} = MIN		0.8	1.35		V
V_{IK}	Input clamp voltage	V_{CC} = MIN, I_I = −12 mA				−1.5	V
V_{OH}	High-level output voltage	V_{CC} = MIN, I_{OH} = −800 μA		2.4	3.4		V
V_{OL}	Low-level output voltage	V_{CC} = MIN, I_{OL} = 16 mA			0.2	0.4	V
I_I	Input current at maximum input voltage	V_{CC} = MAX, V_I = 5.5 V				1	mA
I_{IH}	High-level input current	V_{CC} = MAX, V_I = 2.4 V	Input A			40	μA
			Input B, Clear			80	
I_{IL}	Low-level input current	V_{CC} = MAX, V_I = 0.4 V	Input A			−1.6	mA
			Input B, Clear			−3.2	
I_{OS}	Short-circuit output current§	V_{CC} = MAX	SN54221	−20		−55	mA
			SN74221	−18		−55	
I_{CC}	Supply current	V_{CC} = MAX	Quiescent		26	50	mA
			Triggered		46	80	

†For conditions shown as MIN or MAX, use the appropriate value specified under recommended operating conditions.
‡All typical values are at V_{CC} = 5 V, T_A = 25°C.
§Not more than one output should be shorted at a time

switching characteristics, V_{CC} = 5 V, T_A = 25°C

PARAMETER†	FROM (INPUT)	TO (OUTPUT)	TEST CONDITIONS		MIN	TYP	MAX	UNIT
t_{PLH}	A	Q	C_L = 15 pF, R_L = 400 Ω, See Figure 1 and Note 2	C_{ext} = 80 pF, R_{ext} = 2 kΩ		45	70	ns
	B	Q				35	55	
t_{PHL}	A	$\overline{Q}$				50	80	ns
	B	$\overline{Q}$				40	65	
t_{PHL}	Clear	Q					27	ns
t_{PLH}	Clear	$\overline{Q}$					40	ns
$t_{w(out)}$	A or B	Q or $\overline{Q}$		C_{ext} = 80 pF, R_{ext} = 2 kΩ	70	110	[illegible]	ns
				C_{ext} = 0, R_{ext} = 2 kΩ	20	30	[illegible]	
				C_{ext} = 100 pF, R_{ext} = 10 kΩ	650	700	750	
				C_{ext} = 1 μF, R_{ext} = 10 kΩ	6.5	7	7.5	ms

†t_{PLH} ≡ Propagation delay time, low-to-high-level output
t_{PHL} ≡ Propagation delay time, high-to-low-level output
$t_{w(out)}$ ≡ Output pulse width

NOTE 2: Load circuits and voltage waveforms are shown in Section 1.

TEXAS INSTRUMENTS
POST OFFICE BOX 655012 • DALLAS, TEXAS 75265

recommended operating conditions

		SN54LS221			SN74LS221			UNIT
		MIN	NOM	MAX	MIN	NOM	MAX	
Supply voltage, V_{CC}		4.5	5	5.5	4.75	5	5.25	V
High-level input voltage at A input, V_{IH}		2			2			V
Low-level input voltage at B input, V_{IL}				0.7			0.8	V
High-level output current, I_{OH}				−400			−400	μA
Low-level output current, I_{OL}				4			8	mA
Rate of rise or fall of input pulse, dv/dt	Schmitt, B	1			1			V/s
	Logic input, A	1			1			V/μs
Input pulse width	A or B, $t_{w(in)}$	50			50			ns
	Clear, $t_{w(clear)}$	40			40			
Clear-inactive-state setup time, t_{su}		15			15			ns
External timing resistance, R_{ext}		1.4		70	1.4		100	kΩ
External timing capacitance, C_{ext}		0		1000	0		1000	μF
Output duty cycle	R_T = 2 kΩ			50			50	%
	R_T = MAX R_{ext}			90			90	
Operating free-air temperature, T_A		−55		125	0		70	°C

recommended operating conditions

PARAMETER			TEST CONDITIONS†		SN54LS221			SN74LS221			UNIT
					MIN	TYP‡	MAX	MIN	TYP‡	MAX	
V_{T+}	Positive-going threshold voltage at B input		V_{CC} = MIN			1.0	2		1.0	2	V
V_{T-}	Negative-going threshold voltage at B input		V_{CC} = MIN		0.7	0.9		0.8	0.9		V
V_{IK}	Input clamp voltage		V_{CC} = MIN, I_I = −18 mA				−1.5			−1.5	V
V_{OH}	High-level output voltage		V_{CC} = MIN, I_{OH} = −400 μA		2.5	3.4		2.7	3.4		V
V_{OL}	Low-level output voltage		V_{CC} = MIN	I_{OL} = 4 mA		0.25	0.4		0.25	0.4	V
				I_{OL} = 8 mA					0.35	0.5	
I_I	Input current at maximum input voltage		V_{CC} = MAX, V_I = 7 V				0.1			0.1	mA
I_{IH}	High-level input current		V_{CC} = MAX, V_I = 2.7 V				20			20	μA
I_{IL}	Low-level input current	Input A	V_{CC} = MAX, V_I = 0.4 V				−0.4			−0.4	mA
		Input B					−0.8			−0.8	
		Clear					−0.8			−0.8	
I_{OS}	Short-circuit output current§		V_{CC} = MAX		−20		−100	−20		−100	mA
I_{CC}	Supply current		V_{CC} = MAX	Quiescent		4.7	11		4.7	11	mA
				Triggered		19	27		19	27	

†For conditions shown as MIN or MAX, use the appropriate value specified under recommended operating conditions.
‡All typical values are at V_{CC} = 5 V, T_A = 25°C.
§Not more than one output should be shorted at a time and duration of the short-circuit should not exceed one second.

switching characteristics, V_{CC} = 5 V, T_A = 25°C

PARAMETER†	FROM (INPUT)	TO (OUTPUT)	TEST CONDITIONS		MIN	TYP	MAX	UNIT
t_{PLH}	A	Q	C_L = 15 pF, R_L = 2 kΩ, See Figure 1 and Note 3	C_{ext} = 80 pF, R_{ext} = 2 kΩ		45	70	ns
	B	Q				35	55	
t_{PHL}	A	$\overline{Q}$				50	80	ns
	B	$\overline{Q}$				40	65	
t_{PHL}	Clear	Q				35	55	ns
t_{PLH}	Clear	$\overline{Q}$				44	65	ns
$t_{w(out)}$	A or B	Q or $\overline{Q}$		C_{ext} = 80 pF, R_{ext} = 2 kΩ	70	120	150	ns
				C_{ext} = 0, R_{ext} = 2 kΩ	20	47	70	
				C_{ext} = 100 pF, R_{ext} = 10 kΩ	670	740	810	
				C_{ext} = 1 μF, R_{ext} = 10 kΩ	6	6.9	7.5	ms

†t_{PLH} = Propagation delay time, low-to-high-level output
t_{PHL} = Propagation delay time, high-to-low-level output
$t_{w(out)}$ = Output pulse width

NOTE 3: Load circuits and voltage waveforms are shown in Section 1.

TEXAS INSTRUMENTS
POST OFFICE BOX 655012 • DALLAS, TEXAS 75265

PARAMETER MEASUREMENT INFORMATION

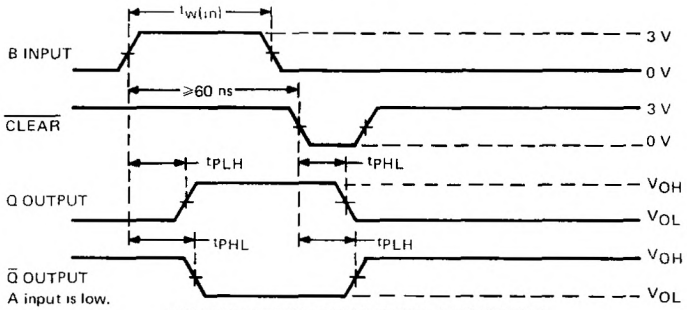

TRIGGER FROM B, THEN CLEAR—CONDITION 1

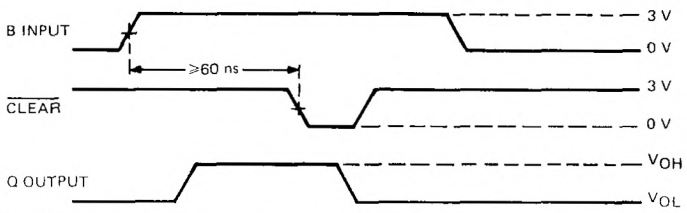

TRIGGER FROM B, THEN CLEAR—CONDITION 2

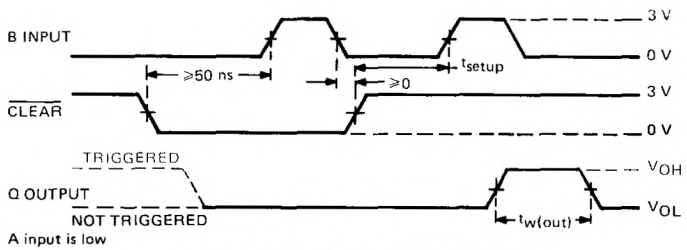

CLEAR OVERRIDING B, THEN TRIGGER FROM B

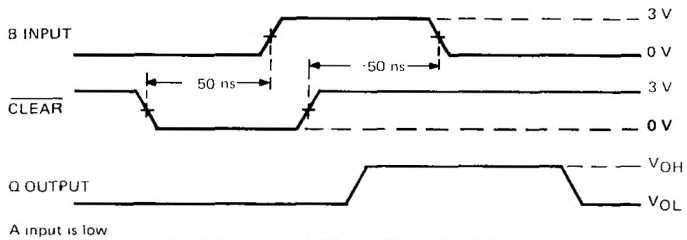

TRIGGERING FROM POSITIVE TRANSITION OF CLEAR

FIGURE 1—SWITCHING CHARACTERISTICS

PARAMETER MEASUREMENT INFORMATION

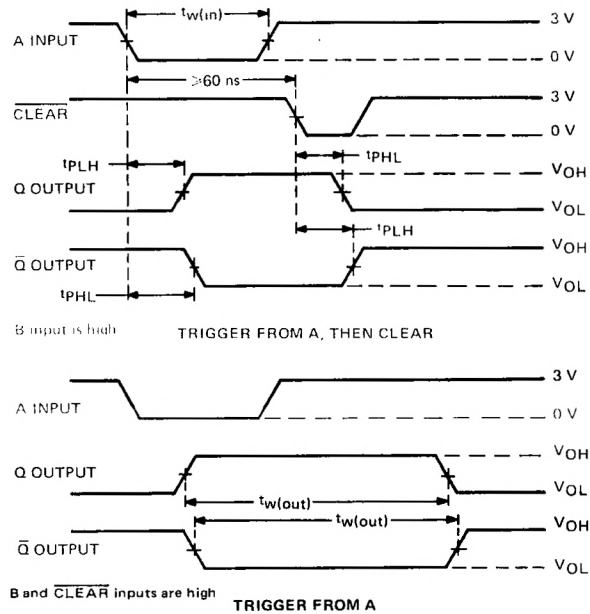

NOTES: A. Input pulses are supplied by generators having the following characteristics: PRR ≤ 1 MHz, $Z_{out} \approx 50\ \Omega$; for '221, $t_r \leq 7$ ns, $t_f \leq 7$ ns, for 'LS221, $t_r \leq 15$ ns, $t_f \leq 6$ ns.
B. All measurements are made between the 1.5 V points of the indicated transitions for the '221 or between the 1.3 V points for the 'LS221.

FIGURE 1–SWITCHING CHARACTERISTICS (CONTINUED)

TEXAS INSTRUMENTS
POST OFFICE BOX 655012 • DALLAS, TEXAS 75265

TYPICAL CHARACTERISTICS ('221 ONLY)†

DISTRIBUTION OF UNITS
for
OUTPUT PULSE WIDTH

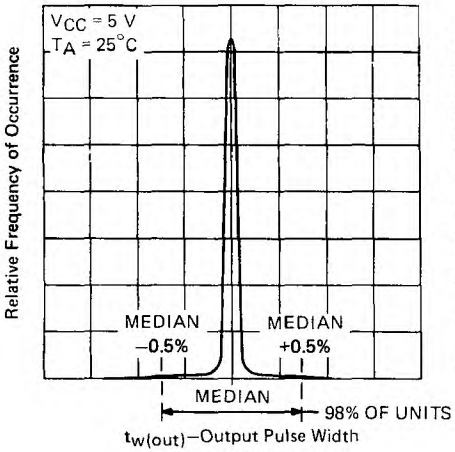

FIGURE 2

VARIATION IN OUTPUT PULSE WIDTH
vs
SUPPLY VOLTAGE

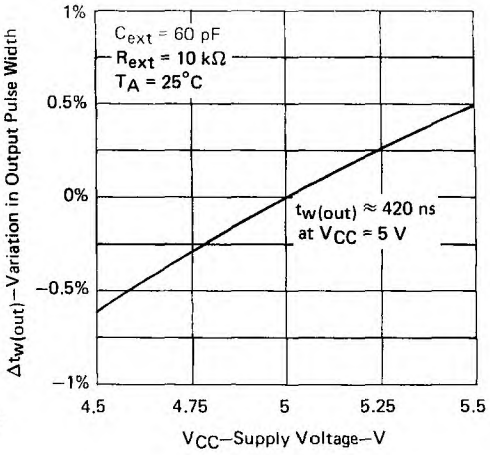

FIGURE 3

VARIATION IN OUTPUT PULSE WIDTH
vs
FREE-AIR TEMPERATURE

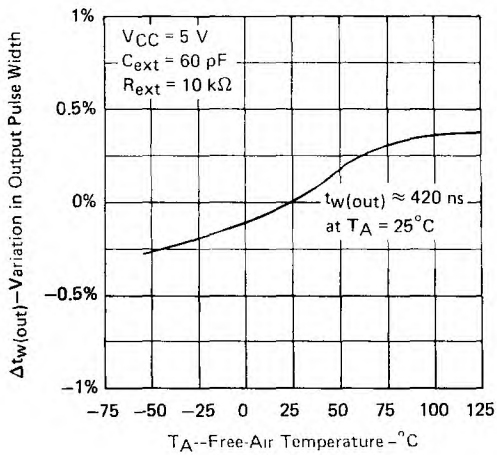

FIGURE 4

OUTPUT PULSE WIDTH
vs
TIMING RESISTOR VALUE

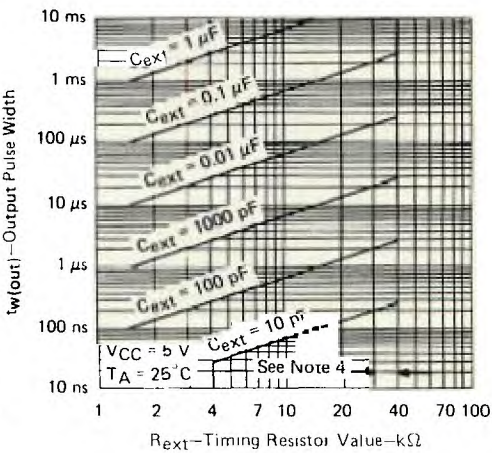

FIGURE 5

NOTE 4: These values of resistance exceed the maximum recommended for use over the full temperature range of the SN54221.

†Data for temperatures below 0°C and above 70°C, and for supply voltages below 4.75 V and above 5.25 V are applicable for the SN54221 only.

SN54LS240, SN54LS241, SN54LS244, SN54S240, SN54S241, SN54S244, SN74LS240, SN74LS241, SN74LS244, SN74S240, SN74S241, SN74S244
OCTAL BUFFERS AND LINE DRIVERS WITH 3-STATE OUTPUTS

APRIL 1985–REVISED MARCH 1988

- 3-State Outputs Drive Bus Lines or Buffer Memory Address Registers
- PNP Inputs Reduce D-C Loading
- Hysteresis at Inputs Improves Noise Margins

SN54LS', SN54S' . . . J OR W PACKAGE
SN74LS', SN74S' . . . DW OR N PACKAGE
(TOP VIEW)

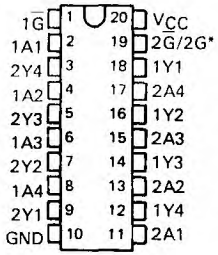

SN54LS', SN54S' . . . FK PACKAGE
(TOP VIEW)

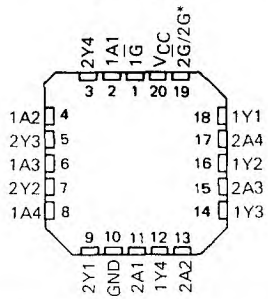

*2G for 'LS241 and 'S241 or 2G̅ for all other drivers.

description

These octal buffers and line drivers are designed specifically to improve both the performance and density of three-state memory address drivers, clock drivers, and bus-oriented receivers and transmitters. The designer has a choice of selected combinations of inverting and noninverting outputs, symmetrical G̅ (active-low output control) inputs, and complementary G and G̅ inputs. These devices feature high fan-out, improved fan-in, and 400-mV noise-margin. The SN74LS' and SN74S' can be used to drive terminated lines down to 133 ohms.

The SN54' family is characterized for operation over the full military temperature range of −55°C to 125°C. The SN74' family is characterized for operation from 0°C to 70°C.

schematics of inputs and outputs

'LS240, 'LS241, 'LS244
EQUIVALENT OF EACH INPUT

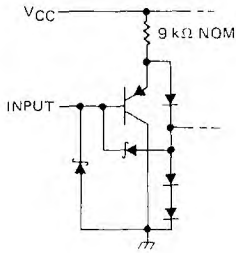

'S240, 'S241, 'S244
EQUIVALENT OF EACH INPUT

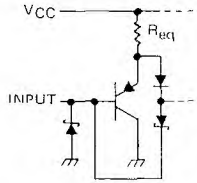

G and G̅ inputs: R_{eq} = 2 kΩ NOM
A inputs: R_{eq} = 2.8 kΩ NOM

TYPICAL OF ALL OUTPUTS

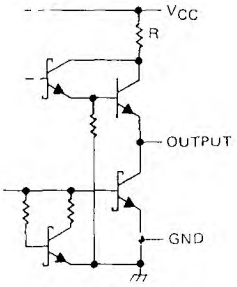

'LS240, 'LS241, 'LS244;
R = 50 Ω NOM
'S240, 'S241, 'S244
R = 25 Ω NOM

PRODUCTION DATA documents contain information current as of publication date. Products conform to specifications per the terms of Texas Instruments standard warranty. Production processing does not necessarily include testing of all parameters.

logic symbols†

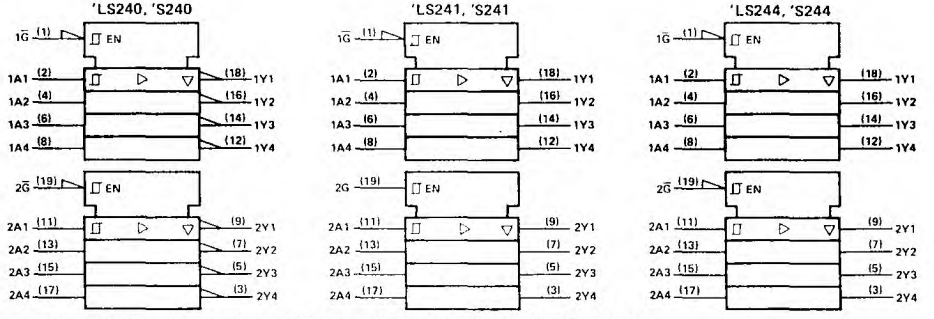

†These symbols are in accordance with ANSI/IEEE Std. 91-1984 and IEC Publication 617-12.

2 TTL Devices

logic diagrams (positive logic)

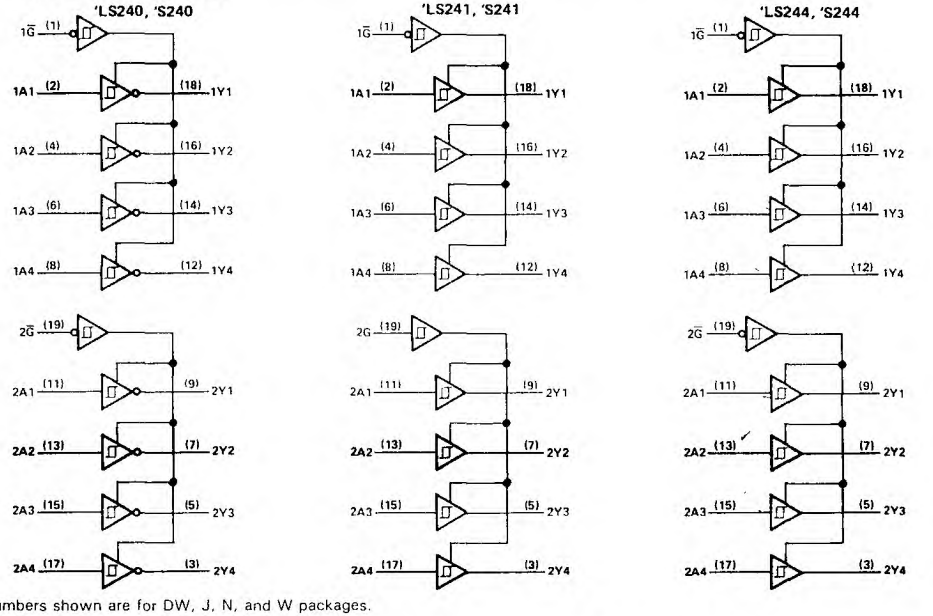

Pin numbers shown are for DW, J, N, and W packages.

absolute maximum ratings over operating free-air temperature range (unless otherwise noted)

Supply voltage, V_{CC} (see Note 1) . . . . . 7 V
Input voltage: 'LS Circuits . . . . . 7 V
'S Circuits . . . . . 5.5 V
Off-state output voltage . . . . . 5.5 V
Operating free-air temperature range: SN54LS', SN54S' Circuits . . . . . −55°C to 125°C
SN74LS', SN74S' Circuits . . . . . 0°C to 70°C
Storage temperature range . . . . . −65°C to 150°C

NOTE 1 Voltage values are with respect to network ground terminal

TEXAS INSTRUMENTS
POST OFFICE BOX 655012 • DALLAS, TEXAS 75265

recommended operating conditions

PARAMETER		SN54LS'			SN74LS'			UNIT
		MIN	NOM	MAX	MIN	NOM	MAX	
V_{CC}	Supply voltage (see Note 1)	4.5	5	5.5	4.75	5	5.25	V
V_{IH}	High-level input voltage	2			2			V
V_{IL}	Low-level input voltage			0.7			0.8	V
I_{OH}	High-level output current			−12			−15	mA
I_{OL}	Low-level output current			12			24	mA
T_A	Operating free-air temperature	−55		125	0		70	°C

NOTE 1: Voltage values are with respect to network ground terminal.

electrical characteristics over recommended operating free-air temperature range (unless otherwise noted)

PARAMETER		TEST CONDITIONS†			SN54LS'			SN74LS'			UNIT
					MIN	TYP‡	MAX	MIN	TYP‡	MAX	
V_{IK}		V_{CC} = MIN, I_I = −18 mA					−1.5			−1.5	V
Hysteresis ($V_{T+} - V_{T-}$)		V_{CC} = MIN			0.2	0.4		0.2	0.4		V
V_{OH}		V_{CC} = MIN, I_{OH} = −3 mA	V_{IH} = 2 V,	V_{IL} = MAX,	2.4	3.4		2.4	3.4		V
		V_{CC} = MIN, I_{OH} = MAX	V_{IH} = 2 V,	V_{IL} = 0.5 V,	2			2			
V_{OL}		V_{CC} = MIN, V_{IL} = MAX	V_{IH} = 2 V,	I_{OL} = 12 mA			0.4			0.4	V
				I_{OL} = 24 mA						0.5	
I_{OZH}		V_{CC} = MAX, V_{IL} = MAX	V_{IH} = 2 V,	V_O = 2.7 V			20			20	μA
I_{OZL}				V_O = 0.4 V			−20			−20	
I_I		V_{CC} = MAX,	V_I = 7 V				0.1			0.1	mA
I_{IH}		V_{CC} = MAX,	V_I = 2.7 V				20			20	μA
I_{IL}		V_{CC} = MAX,	V_{IL} = 0.4 V				−0.2			−0.2	mA
I_{OS}§		V_{CC} = MAX			−40		−225	−40		−225	mA
I_{CC}	Outputs high	V_{CC} = MAX, Output open		All		17	27		17	27	mA
	Outputs low			'LS240		26	44		26	44	
				'LS241, 'LS244		27	46		27	46	
	All outputs disabled			'LS240		29	50		29	50	
				'LS241, 'LS244		32	54		32	54	

† For conditions shown as MIN or MAX, use the appropriate value specified under recommended operating conditions.
‡ All typical values are at V_{CC} = 5 V, T_A = 25°C.
§ Not more than one output should be shorted at a time, and duration of the short-circuit should not exceed one second.

switching characteristics, V_{CC} = 5 V, T_A = 25°C

PARAMETER	TEST CONDITIONS		'LS240			'LS241, 'LS244			UNIT
			MIN	TYP	MAX	MIN	TYP	MAX	
t_{PLH}	R_L = 667 Ω, See Note 2	C_L = 45 pF,		9	14		12	18	ns
t_{PHL}				12	18		12	18	ns
t_{PZL}				20	30		20	30	ns
t_{PZH}				15	23		15	23	ns
t_{PLZ}	R_L = 667 Ω, See Note 2	C_L = 5 pF,		10	20		10	20	ns
t_{PHZ}				15	25		15	25	ns

NOTE 2: Load circuits and voltage waveforms are shown in Section 1.

recommended operating conditions

	PARAMETER	SN54S'			SN74S'			UNIT
		MIN	NOM	MAX	MIN	NOM	MAX	
V_{CC}	Supply voltage, (see Note 1)	4.5	5	5.5	4.75	5	5.25	V
V_{IH}	High-level input voltage	2			2			V
V_{IL}	Low-level input voltage			0.8			0.8	V
I_{OH}	High-level output current			−12			−15	mA
I_{OL}	Low-level output current			48			64	mA
	External resistance between any input and V_{CC} or ground			40			40	kΩ
T_A	Operating free-air temperature (see Note 3)	−55		125	0		70	°C

NOTES: 1. Voltage values are with respect to network ground terminal.
3. An SN54S241J operating at free-air temperature above 116°C requires a heat sink that provides a thermal resistance from case to free-air $R_{\theta CA}$, of not more than 40°C/W.

electrical characteristics over recommended operating free-air temperature range (unless otherwise noted)

PARAMETER		TEST CONDITIONS†				SN54S'			SN74S'			UNIT
						MIN	TYP‡	MAX	MIN	TYP‡	MAX	
V_{IK}		V_{CC} = MIN,	I_I = −18 mA					−1.2			−1.2	V
Hysteresis ($V_{T+} - V_{T-}$)		V_{CC} = MIN				0.2	0.4		0.2	0.4		V
V_{OH}		V_{CC} = MIN,	V_{IH} = 2 V,	V_{IL} = 0.8 V,	I_{OH} = −1 mA				2.7			V
		V_{CC} = MIN,	V_{IH} = 2 V,	V_{IL} = 0.8 V,	I_{OH} = −3 mA	2.4	3.4		2.4	3.4		
		V_{CC} = MIN,	V_{IH} = 2 V,	V_{IL} = 0.5 V,	I_{OH} = MAX	2			2			
V_{OL}		V_{CC} = MIN,	V_{IH} = 2 V,	V_{IL} = 0.8 V,	I_{OL} = MAX			0.55			0.55	V
I_{OZH}		V_{CC} = MAX,	V_{IH} = 2 V,	V_O = 2.4 V				50			50	μA
I_{OZL}		V_{IL} = 0.8 V,		V_O = 0.5 V				−50			−50	
I_I		V_{CC} = MAX,	V_I = 5.5 V					1			1	mA
I_{IH}		V_{CC} = MAX,	V_I = 2.7 V					50			50	μA
I_{IL}	Any A	V_{CC} = MAX,	V_I = 0.5 V					−400			−400	μA
	Any G							−2			−2	mA
I_{OS}§		V_{CC} = MAX				−50		−225	−50		−225	mA
I_{CC}	Outputs high	V_{CC} = MAX,	Outputs open		'S240		80	123		80	135	mA
					'S241, 'S244		95	147		95	160	
	Outputs low				'S240		100	145		100	150	
					'S241, 'S244		120	170		120	180	
	Outputs disabled				'S240		100	145		100	150	
					'S241, 'S244		120	170		120	180	

† For conditions shown as MIN or MAX, use the appropriate value specified under recommended operating conditions.
‡ All typical values are at V_{CC} = 5 V, T_A = 25°C.
§ Not more than one output should be shorted at a time, and duration of the short-circuit should not exceed one second.

TEXAS INSTRUMENTS
POST OFFICE BOX 655012 • DALLAS, TEXAS 75265

switching characteristics, V_{CC} = 5 V, T_A = 25°C

PARAMETER	TEST CONDITIONS	'S240 MIN	'S240 TYP	'S240 MAX	'S241, 'S244 MIN	'S241, 'S244 TYP	'S241, 'S244 MAX	UNIT
t_{PLH}	R_L = 90 Ω, See Note 4; C_L = 50 pF,		4.5	7		6	9	ns
t_{PHL}			4.5	7		6	9	ns
t_{PZL}			10	15		10	15	ns
t_{PZH}			6.5	10		8	12	ns
t_{PLZ}	R_L = 90 Ω, See Note 4; C_L = 5 pF,		10	15		10	15	ns
t_{PHZ}			6	9		6	9	ns

NOTE 4: Load circuits and voltage waveforms are shown in Section 1.

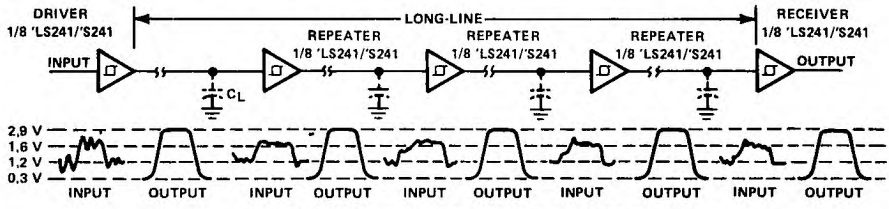

'LS241, 'S241 USED AS REPEATER/LEVEL RESTORER

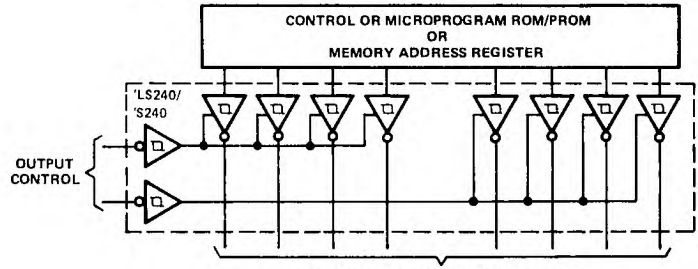

'LS240/'S240 USED AS SYSTEM AND/OR MEMORY BUS DRIVER—4-BIT ORGANIZATION CAN BE APPLIED TO HANDLE BINARY OR BCD

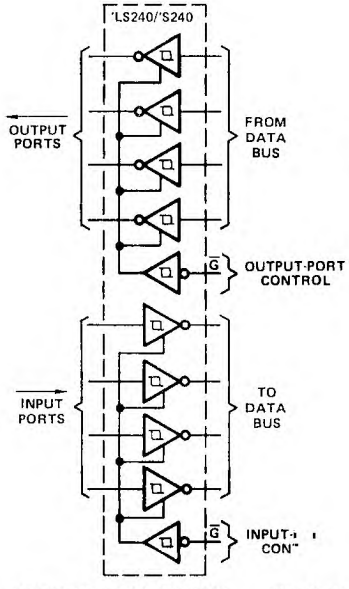

INDEPENDENT 4-BIT BUS DRIV[illegible] RECEIVERS IN A SINGLE PACK[illegible]

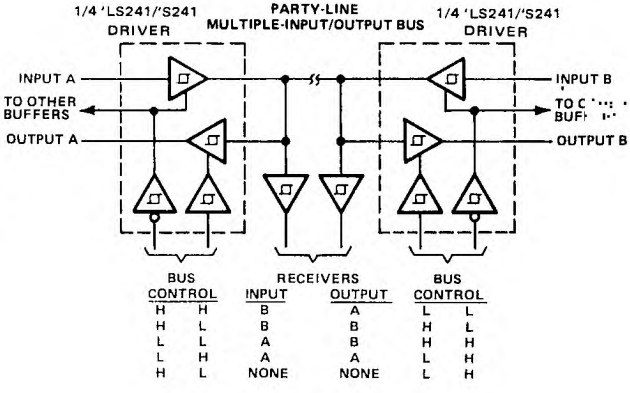

BUS CONTROL		RECEIVERS INPUT	RECEIVERS OUTPUT	BUS CONTROL	
H	H	B	A	L	L
H	L	B	B	H	L
L	L	A	B	H	H
L	H	A	A	L	H
H	L	NONE	NONE	L	H

PARTY-LINE BUS SYSTEM
WITH MULTIPLE INPUTS, OUTPUTS, AND RECEIVERS

TEXAS INSTRUMENTS
POST OFFICE BOX 655012 • DALLAS, TEXAS 75265

APRIL 1985—REVISED MARCH 1988

- **Two-Way Asynchronous Communication Between Data Buses**
- **PNP Inputs Reduce D-C Loading**
- **Hysteresis (Typically 400 mV) at Inputs Improves Noise Margin**

description

These four-data-line transceivers are designed for asynchronous two-way communications between data buses. The SN74LS' can be used to drive terminated lines down to 133 ohms.

The SN54' family is characterized for operation over the full military temperature range of −55°C to 125°C. The SN74' family is characterized for operation from 0°C to 70°C.

FUNCTION TABLE (EACH TRANSCEIVER)

INPUTS		'LS242	'LS243
$\overline{G}AB$	GBA		
L	L	$\overline{A}$ to B	A to B
H	H	$\overline{B}$ to A	B to A
H	L	Isolation	Isolation
L	H	Latch A and B ($A = \overline{B}$)	Latch A and B ($A = B$)

SN54LS242, SN54LS243 . . . J OR W PACKAGE
SN74LS242, SN74LS243 . . . D OR N PACKAGE
(TOP VIEW)

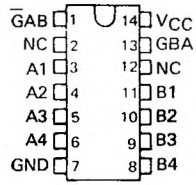

SN54LS242, SN54LS243 . . . FK PACKAGE
(TOP VIEW)

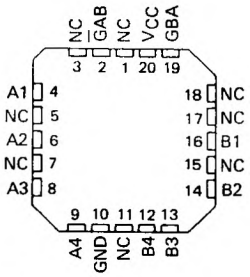

NC–No internal connection

schematics of inputs and outputs

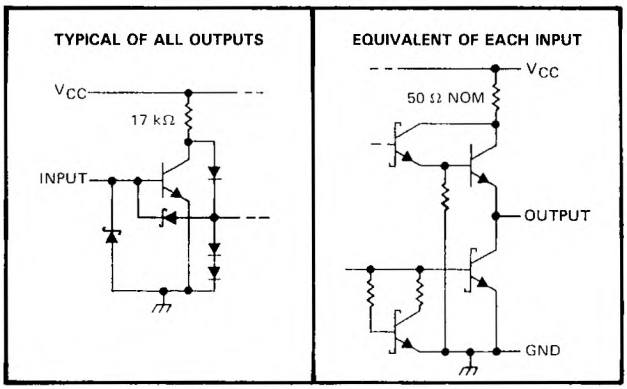

PRODUCTION DATA documents contain information current as of publication date. Products conform to specifications per the terms of Texas Instruments standard warranty. Production processing does not necessarily include testing of all parameters.

logic symbols†

'LS242

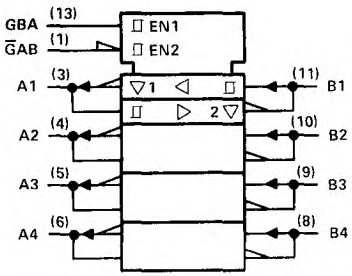

'LS243

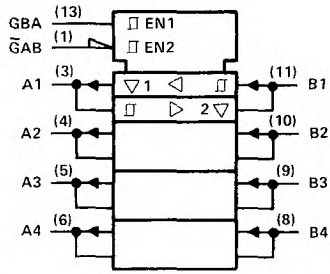

†These symbols are in accordance with ANSI/IEEE Std. 91-1984 and IEC Publication 617-12.

logic diagrams (positive logic)

'LS242

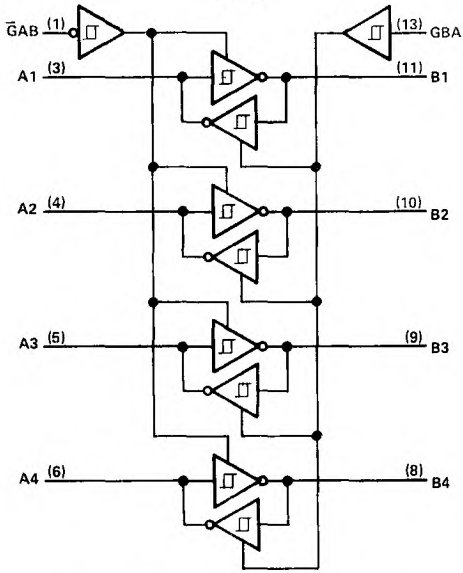

'LS243

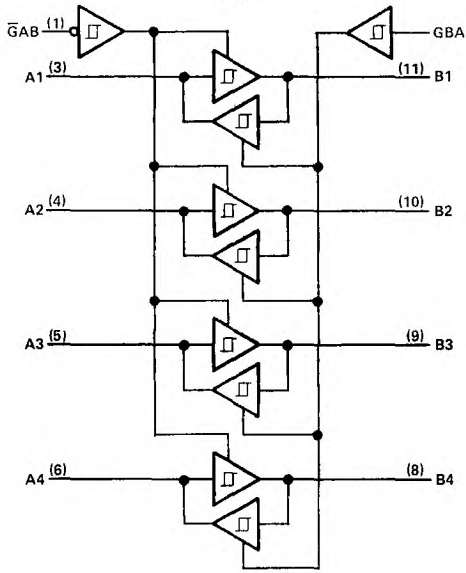

Pin numbers shown are for D, J, N, and W packages.

absolute maximum ratings over operating free-air temperature range (unless otherwise noted)

Supply voltage, V_{CC} (see Note 1) . . . . . 7 V
Input voltage . . . . . 7 V
Off-state output voltage . . . . . 5.5 V
Operating free-air temperature range: SN54LS' . . . . . −55°C to 125°C
SN74LS' . . . . . 0°C to 70°C
Storage temperature range . . . . . −65°C to 150°C

NOTE 1: Voltage values are with respect to network ground terminal.

TEXAS INSTRUMENTS
POST OFFICE BOX 655012 • DALLAS, TEXAS 75265

recommended operating conditions

		SN54LS'			SN74LS'			UNIT
		MIN	NOM	MAX	MIN	NOM	MAX	
V_{CC}	Supply voltage, (see Note 1)	4.5	5	5.5	4.75	5	5.25	V
V_{IH}	High-level input voltage	2			2			V
V_{IL}	Low-level input voltage			0.7			0.8	V
I_{OH}	High-level output current			−12			−15	mA
I_{OL}	Low-level output current			12			24	mA
T_A	Operating free-air temperature	−55		125	0		70	°C

electrical characteristics over recommended operating free-air temperature range (unless otherwise noted)

PARAMETER		TEST CONDITIONS†		SN54LS'			SN74LS'			UNIT
				MIN	TYP‡	MAX	MIN	TYP‡	MAX	
V_{IK}	A or B	V_{CC} = MIN, I_I = −18 mA				−1.5			−1.5	V
Hysteresis ($V_{T+} - V_{T-}$)		V_{CC} = MIN		0.2	0.4		0.2	0.4		V
V_{OH}		V_{CC} = MIN, V_{IH} = 2 V, I_{OH} = −3 mA	V_{IL} = MAX,	2.4	3.1		2.4	3.1		V
		V_{CC} = MIN, V_{IH} = 2 V, I_{OH} = MAX	V_{IL} = 0.5 V,	2			2			
V_{OL}		V_{CC} = MIN, V_{IH} = 2 V, V_{IL} = MAX	I_{OL} = 12 mA		0.25	0.4		0.25	0.4	V
			I_{OL} = 24 mA					0.35	0.5	
I_{OZH}		V_{CC} = MAX, V_{IH} = 2 V,	V_O = 2.7 V			40			40	μA
I_{OZL}		V_{IL} = MAX	V_O = 0.4 V			−200			−200	μA
I_I	A or B	V_{CC} = MAX,	V_I = 5.5 V			0.1			0.1	mA
	$\overline{G}AB$ or GBA		V_I = 7 V			0.1			0.1	
I_{IH}		V_{CC} = MAX, V_I = 2.7 V				20			20	μA
I_{IL}	A inputs	V_{CC} = MAX, V_I = 0.4 V, GAB and GBA at 0 V				−0.2			−0.2	mA
	B inputs	V_{CC} = MAX, V_I = 0.4 V, GAB and GBA at 4.5 V				−0.2			−0.2	
	$\overline{G}AB$ or GBA	V_{CC} = MAX, V_I = 0.4 V				−0.2			−0.2	
I_{OS}§		V_{CC} = MAX		−40		−225	−40		−225	mA
I_{CC}	Outputs high	V_{CC} = MAX, See Note 2	Outputs open, 'LS242, 'LS243		22	38		22	38	mA
	Outputs low		'LS242, 'LS243		29	50		29	50	
	All outputs disabled		'LS242		29	50		29	50	
			'LS243		32	54		32	54	

† For conditions shown as MIN or MAX, use the appropriate value specified under recommended operating conditions.
‡ All typical values are at V_{CC} = 5 V, T_A = 25°C.
§ Not more than one output should be shorted at a time, and duration of the short-circuit should not exceed one second.
NOTE 2. I_{CC} is measured with transceivers enabled in one direction only, or with all transceivers disabled.

switching characteristics, V_{CC} = 5 V, T_A = 25°C

PARAMETER		TEST CONDITIONS		'LS242			'LS243			UNIT
				MIN	TYP	MAX	MIN	TYP	MAX	
t_{PLH}		R_L = 667 Ω, See Note 3	C_L = 45 pF,		9	14		12	18	ns
t_{PHL}					12	18		12	18	ns
t_{PZL}					20	30		20	30	ns
t_{PZH}					15	23		15	23	ns
t_{PLZ}		R_L = 667 Ω, See Note 3	C_L = 5 pF,		10	20		10	20	ns
t_{PHZ}					15	25		15	25	ns

NOTE 3: Load circuits and voltage waveforms are shown in Section 1.

OCTOBER 1976—REVISED MARCH 1988

- **Bi-directional Bus Transceiver in a High-Density 20-Pin Package**
- **3-State Outputs Drive Bus Lines Directly**
- **PNP Inputs Reduce D-C Loading on Bus Lines**
- **Hysteresis at Bus Inputs Improve Noise Margins**
- **Typical Propagation Delay Times, Port-to-Port . . . 8 ns**

TYPE	I_{OL} (SINK CURRENT)	I_{OH} (SOURCE CURRENT)
SN54LS245	12 mA	-12 mA
SN74LS245	24 mA	-15 mA

SN54LS245 . . . J OR W PACKAGE
SN74LS245 . . . DW OR N PACKAGE
(TOP VIEW)

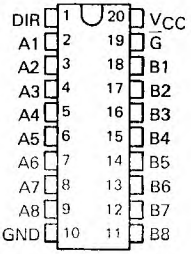

SN54LS245 . . . FK PACKAGE
(TOP VIEW)

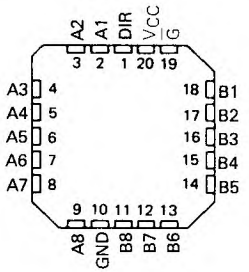

description

These octal bus transceivers are designed for asynchronous two-way communication between data buses. The control function implementation minimizes external timing requirements.

The devices allow data transmission from the A bus to the B bus or from the B bus to the A bus depending upon the logic level at the direction control (DIR) input. The enable input ($\overline{G}$) can be used to disable the device so that the buses are effectively isolated.

The SN54LS245 is characterized for operation over the full military temperature range of −55°C to 125°C. The SN74LS245 is characterized for operation from 0°C to 70°C.

schematics of inputs and outputs

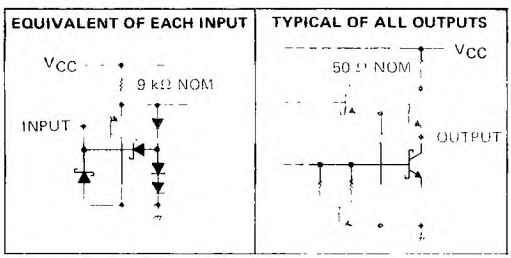

FUNCTION TABLE

ENABLE $\overline{G}$	DIRECTION CONTROL DIR	OPERATION
L	L	B data to A bus
L	H	A data to B bus
H	X	Isolation

H = high level, L = low level, X = irrelevant

PRODUCTION DATA documents contain information current as of publication date. Products conform to specifications per the terms of Texas Instruments standard warranty. Production processing does not necessarily include testing of all parameters.

logic symbol†

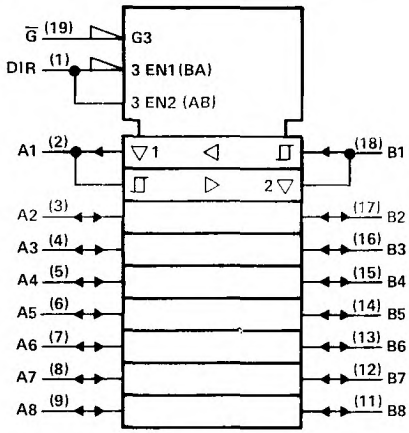

†This symbol is in accordance with ANSI/IEEE Std. 91-1984 and IEC Publication 617-12.
Pin numbers shown are for DW, J, N, and W packages.

logic diagram (positive logic)

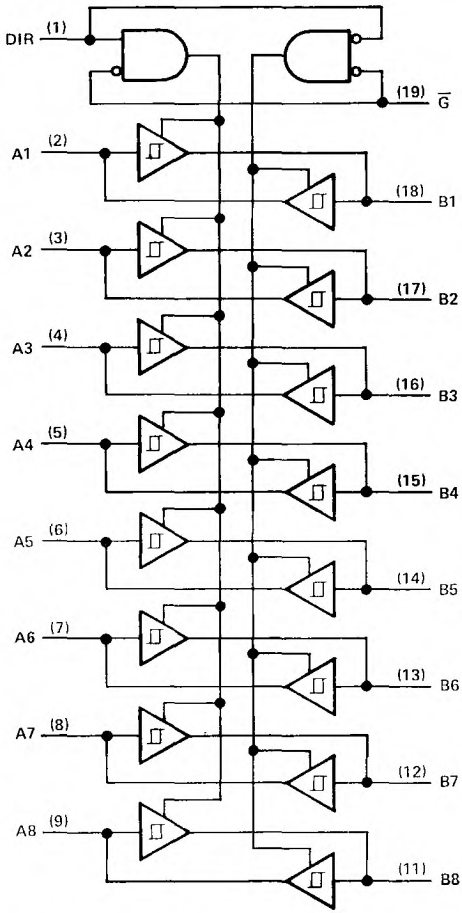

absolute maximum ratings over operating free-air temperature range (unless otherwise noted)

Supply voltage, V_{CC} (see Note 1) . . . . . 7 V
Input voltage . . . . . 7 V
Off-state output voltage . . . . . 5.5 V
Operating free-air temperature range: SN54LS245 . . . . . −55°C to 125°C
SN74LS245 . . . . . 0°C to 70°C
Storage temperature range . . . . . −65°C to 150°C

NOTE 1: Voltage values are with respect to network ground terminal.

recommended operating conditions

PARAMETER	SN54LS245			SN74LS245			UNIT
	MIN	NOM	MAX	MIN	NOM	MAX	
Supply voltage, V_{CC}	4.5	5	5.5	4.75	5	5.25	V
High-level output current, I_{OH}			−12			−15	mA
Low-level output current, I_{OL}			12			24	mA
Operating free-air temperature, T_A	−55		125	0		70	°C

electrical characteristics over recommended operating free-air temperature range (unless otherwise noted)

PARAMETER			TEST CONDITIONS†		SN54LS245			SN74LS245			UNIT
					MIN	TYP‡	MAX	MIN	TYP‡	MAX	
V_{IH}	High-level input voltage				2			2			V
V_{IL}	Low-level input voltage						0.7			0.8	V
V_{IK}	Input clamp voltage		V_{CC} = MIN,	I_I = −18 mA			−1.5			−1.5	V
	Hysteresis ($V_{T+} - V_{T-}$)A or B input		V_{CC} = MIN		0.2	0.4		0.2	0.4		V
V_{OH}	High-level output voltage		V_{CC} = MIN, V_{IH} = 2 V, V_{IL} = V_{IL} max	I_{OH} = −3 mA	2.4	3.4		2.4	3.4		V
				I_{OH} = MAX	2			2			
V_{OL}	Low-level output voltage		V_{CC} = MIN, V_{IH} = 2 V, V_{IL} = V_{IL} max	I_{OL} = 12 mA			0.4			0.4	V
				I_{OL} = 24 mA						0.5	
I_{OZH}	Off-state output current, high-level voltage applied		V_{CC} = MAX, $\overline{G}$ at 2 V	V_O = 2.7 V			20			20	μA
I_{OZL}	Off-state output current, low-level voltage applied			V_O = 0.4 V			−200			−200	
I_I	Input current at maximum input voltage	A or B	V_{CC} = MAX,	V_I = 5.5 V			0.1			0.1	mA
		DIR or $\overline{G}$		V_I = 7 V			0.1			0.1	
I_{IH}	High-level input current		V_{CC} = MAX,	V_{IH} = 2.7 V			20			20	μA
I_{IL}	Low-level input current		V_{CC} = MAX,	V_{IL} = 0.4 V			−0.2			−0.2	mA
I_{OS}	Short-circuit output current§		V_{CC} = MAX		−40		−225	−40		−225	mA
I_{CC}	Supply current	Total, outputs high	V_{CC} = MAX,	Outputs open		48	70		48	70	mA
		Total, outputs low				62	90		62	90	
		Outputs at Hi-Z				64	95		64	95	

†For conditions shown as MIN or MAX, use the appropriate value specified under recommended operating conditions.
‡All typical values are at V_{CC} = 5 V, T_A = 25°C.
§Not more than one output should be shorted at a time, and duration of the short-circuit should not exceed one second.

switching characteristics, V_{CC} = 5 V, T_A = 25°C

PARAMETER		TEST CONDITIONS			MIN	TYP	MAX	UNIT
t_{PLH}	Propagation delay time, low-to-high-level output	C_L = 45 pF,	R_L = 667 Ω,	See Note 2		8	12	ns
t_{PHL}	Propagation delay time, high-to-low-level output					8	12	ns
t_{PZL}	Output enable time to low level					27	40	ns
t_{PZH}	Output enable time to high level					25	40	ns
t_{PLZ}	Output disable time from low level	C_L = 5 pF,	R_L = 667 Ω,	See Note 2		15	25	ns
t_{PHZ}	Output disable time from high level					15	28	ns

NOTE 2: Load circuits and voltage waveforms are shown in Section 1.

'246, '247, 'LS247 feature

- Open-Collector Outputs Drive Indicators Directly
- Lamp-Test Provision
- Leading/Trailing Zero Suppression

'LS248 feature

- Internal Pull-Ups Eliminate Need for External Resistors
- Lamp-Test Provision
- Leading/Trailing Zero Suppression

- All Circuit Types Feature Lamp Intensity Modulation Capability

TYPE	DRIVER OUTPUTS				TYPICAL POWER DISSIPATION	PACKAGES
	ACTIVE LEVEL	OUTPUT CONFIGURATION	SINK CURRENT	MAX VOLTAGE		
SN54246	low	open-collector	40 mA	30 V	320 mW	J,W
SN54247	low	open-collector	40 mA	15 V	320 mW	J,W
SN54LS247	low	open-collector	12 mA	15 V	35 mW	J,W
SN54LS248	high	2-kΩ pull-up	2 mA	5.5 V	[illegible] mW	J,W
SN74246	low	open-collector	40 mA	30 V	[illegible] mW	J,N
[illegible]247	low	open-collector	40 mA	15 V	320 mW	J,N
[illegible]LS247	low	open-collector	24 mA	15 V	35 mW	J,N
SN74LS248	high	2-kΩ pull-up	6 mA	5.5 V	125 mW	J,N

SN54246, SN54247 . . . J PACKAGE
SN54LS247 THRU SN54LS248 . . . J OR W PACKAGE
SN74246, SN74247 . . . N PACKAGE
SN74LS247, SN74LS248 . . . D OR N PACKAGE
(TOP VIEW)

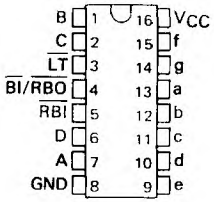

SN54LS247, SN54LS248 . . . FK PACKAGE
(TOP VIEW)

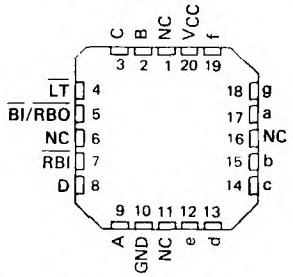

NC – No internal connection

PRODUCTION DATA documents contain information current as of publication date. Products conform to specifications per the terms of Texas Instruments standard warranty. Production processing does not necessarily include testing of all parameters.

description

The '246 and '247 are electrically and functionally identical to the SN5446A/SN7446A, and SN5447A/SN7447A respectively, and have the same pin assignments as their equivalents. The 'LS247 and 'LS248 are electrically and functionally identical to the SN54LS47/SN74LS47 and SN54LS48/SN74LS48, respectively, and have the same pin assignments as their equivalents. They can be used interchangeably in present or future designs to offer designers a choice between two indicator fonts. The '46A, '47A, 'LS47, and 'LS48 compose the 6 and the 9 without tails and the '246, '247, 'LS247, and 'LS248 compose the 6 and the 9 with tails. Composition of all other characters, including display patterns for BCD inputs above nine, is identical. The '246, '247, and 'LS247 feature active-low outputs designed for driving indicators directly, and the 'LS248 features active-high outputs for driving lamp buffers. All of the circuits have full ripple-blanking input/output controls and a lamp test input. Segment identification and resultant displays are shown below. Display patterns for BCD input counts above 9 are unique symbols to authenticate input conditions.

All of these circuits incorporate automatic leading and/or trailing-edge zero-blanking control ($\overline{RBI}$ and $\overline{RBO}$). Lamp test ($\overline{LT}$) of these types may be performed at any time when the $\overline{BI}/\overline{RBO}$ node is at a high level. All types contain an overriding blanking input (BI) which can be used to control the lamp intensity by pulsing or to inhibit the outputs. Inputs and outputs are entirely compatible for use with TTL logic outputs.

Series 54 and Series 54LS devices are characterized for operation over the full military temperature range of −55°C to 125°C; Series 74 and Series 74LS devices are characterized for operation from 0°C to 70°C.

SEGMENT IDENTIFICATION

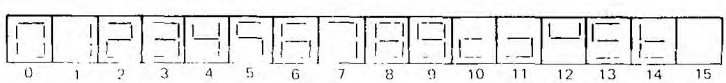

NUMERICAL DESIGNATIONS AND RESULTANT DISPLAYS

logic symbols†

'246, '247, 'LS247

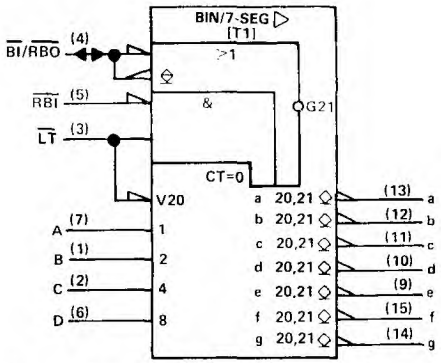

'LS248

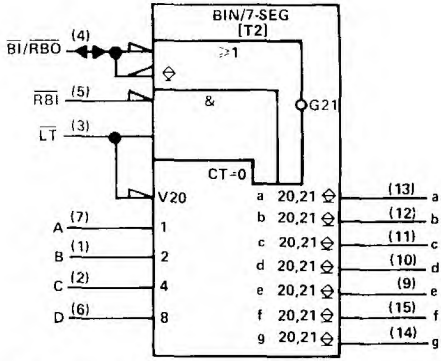

†These symbols are in accordance with ANSI/IEEE Std. 91-1984 and IEC Publication 617-12.
Pin numbers shown are for D, J, N, and W packages.

TEXAS INSTRUMENTS
POST OFFICE BOX 655012 • DALLAS, TEXAS 75265

'246, '247, 'LS247 FUNCTION TABLE (T1)

DECIMAL OR FUNCTION	INPUTS						$\overline{BI}/\overline{RBO}$†	OUTPUTS							NOTE
	LT	RBI	D	C	B	A		a	b	c	d	e	f	g	
0	H	H	L	L	L	L	H	ON	ON	ON	ON	ON	ON	OFF	1
1	H	X	L	L	L	H	H	OFF	ON	ON	OFF	OFF	OFF	OFF	
2	H	X	L	L	H	L	H	ON	ON	OFF	ON	ON	OFF	ON	
3	H	X	L	L	H	H	H	ON	ON	ON	ON	OFF	OFF	ON	
4	H	X	L	H	L	L	H	OFF	ON	ON	OFF	OFF	ON	ON	
5	H	X	L	H	L	H	H	ON	OFF	ON	ON	OFF	ON	ON	
6	H	X	L	H	H	L	H	ON	OFF	ON	ON	ON	ON	ON	
7	H	X	L	H	H	H	H	ON	ON	ON	OFF	OFF	OFF	OFF	
8	H	X	H	L	L	L	H	ON	ON	ON	ON	ON	ON	ON	
9	H	X	H	L	L	H	H	ON	ON	ON	ON	OFF	ON	ON	
10	H	X	H	L	H	L	H	OFF	OFF	OFF	ON	ON	OFF	ON	
11	H	X	H	L	H	H	H	OFF	OFF	ON	ON	OFF	OFF	ON	
12	H	X	H	H	L	L	H	OFF	ON	OFF	OFF	OFF	ON	ON	
13	H	X	H	H	L	H	H	ON	OFF	OFF	ON	OFF	ON	ON	
14	H	X	H	H	H	L	H	OFF	OFF	OFF	ON	ON	ON	ON	
15	H	X	H	H	H	H	H	OFF	OFF	OFF	OFF	OFF	OFF	OFF	
$\overline{BI}$	X	X	X	X	X	X	L	OFF	OFF	OFF	OFF	OFF	OFF	OFF	2
$\overline{RBI}$	H	L	L	L	L	L	L	OFF	OFF	OFF	OFF	OFF	OFF	OFF	3
$\overline{LT}$	L	X	X	X	X	X	H	ON	ON	ON	ON	ON	ON	ON	4

'LS248 FUNCTION TABLE (T2)

DECIMAL OR FUNCTION	INPUTS						$\overline{BI}/\overline{RBO}$†	OUTPUTS							NOTE
	$\overline{LT}$	[illegible]	D	C	B	A		a	b	c	d	e	f	g	
0	H	[illegible]	L	L	L	L	H	H	H	H	H	H	H	L	1
1	H	X	L	L	L	H	H	L	H	H	L	L	L	L	
2	H	X	L	L	H	L	H	H	H	L	H	H	L	H	
3	H	X	L	L	H	H	H	H	H	H	H	L	L	H	
4	H	X	L	H	L	L	H	L	H	H	L	L	H	H	
5	H	X	L	H	L	H	H	H	L	H	H	L	H	H	
6	H	X	L	H	H	L	H	H	L	H	H	H	H	H	
7	H	X	L	H	H	H	H	H	H	H	L	L	L	L	
8	H	X	H	L	L	L	H	H	H	H	H	H	H	H	
9	H	X	H	L	L	H	H	H	H	H	H	L	H	H	
10	H	X	H	L	H	L	H	L	L	L	H	H	L	H	
11	H	X	H	L	H	H	H	L	L	H	H	L	L	H	
12	H	X	H	H	L	L	H	L	H	L	L	L	H	H	
13	H	X	H	H	L	H	H	H	L	L	H	L	H	H	
14	H	X	H	H	H	L	H	L	L	L	H	H	H	H	
15	H	X	H	H	H	H	H	L	L	L	L	L	L	L	
$\overline{BI}$	X	X	X	X	X	X	L	L	L	L	L	L	L	L	2
$\overline{RBI}$	H	L	L	L	L	L	L	L	L	L	L	L	L	L	3
$\overline{LT}$	L	X	X	X	X	X	H	H	H	H	H	H	H	H	4

H = high level, L = low level, X = irrelevant

NOTES: 1. The blanking input ($\overline{BI}$) must be open or held at a high logic level when output functions 0 through 15 are desired. The ripple-blanking input ($\overline{RBI}$) must be open or high if blanking of a decimal zero is not desired.

2. When a low logic level is applied directly to the blanking input ($\overline{BI}$), all segment outputs are low regardless of the level of any other input.

3. When ripple-blanking input ($\overline{RBI}$) and A, B, C, and D are at a low level with the lamp test input high, all segment outputs go low and the ripple-blanking output [illegible] goes to [illegible] evel (response condition).

4. When the blanking input/ripple-blanking output ($\overline{B}$ [illegible] is open or held high and a low is applied to the lamp-test input, all segment outputs are high.

† $\overline{BI}/\overline{RBO}$ is wire-AND logic serving as blanking input ($\overline{BI}$) and/or ripple-blanking output ($\overline{RBO}$).

logic diagram (positive logic)

'246, '247, 'LS247

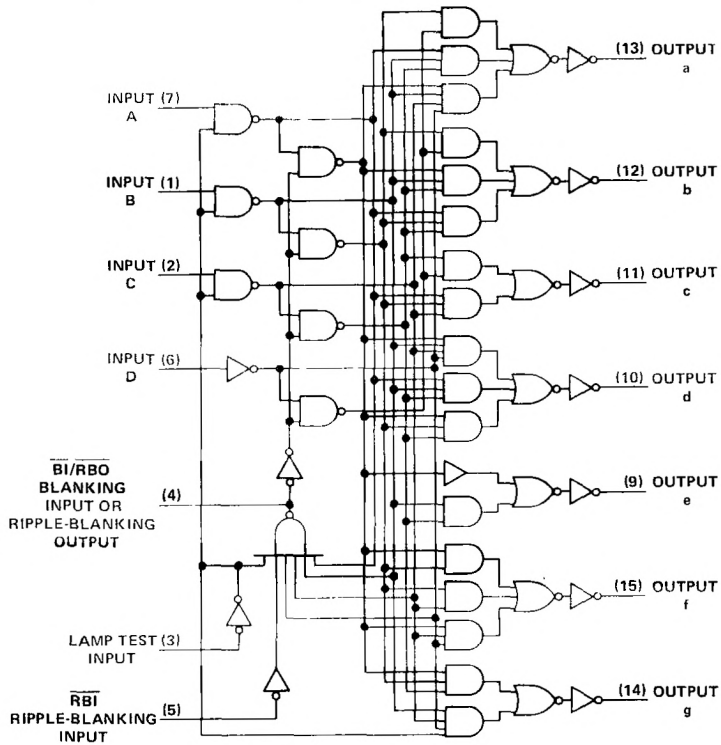

Pin numbers shown are for D, J, N, and W packages.

logic diagram (positive logic)

'LS248

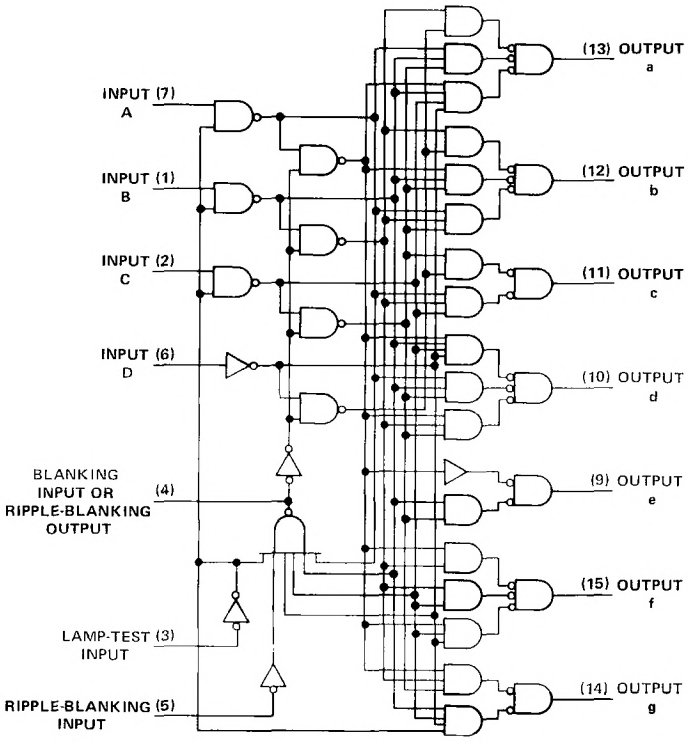

Pin numbers shown are for D, J, N, and W packages

schematics of inputs and outputs

'246, '247

EQUIVALENT OF EACH INPUT EXCEPT $\overline{BI}/\overline{RBO}$

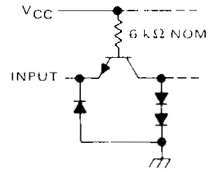

'246, '247

EQUIVALENT OF $\overline{BI}/\overline{RBO}$

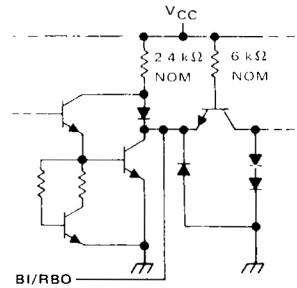

'246, '247

TYPICAL OF OUTPUTS a THRU g

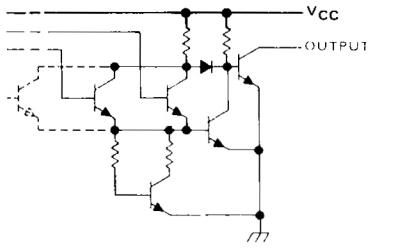

TEXAS INSTRUMENTS
POST OFFICE BOX 655012 • DALLAS, TEXAS 75265

schematics of inputs and outputs

'LS247, 'LS248

EQUIVALENT OF EACH INPUT EXCEPT $\overline{BI}/\overline{RBO}$

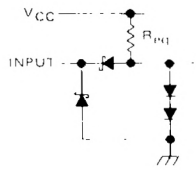

$\overline{LT}$ and $\overline{RBI}$: R_{eq} = 20 kΩ NOM
A, B, C, and D: R_{eq} = 25 kΩ NOM

'LS247, 'LS248

EQUIVALENT OF $\overline{BI}/\overline{RBO}$

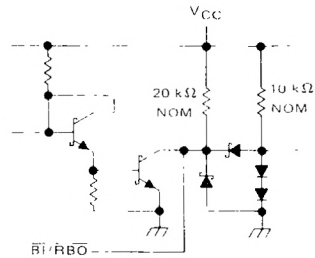

'LS247

TYPICAL OF OUTPUTS a THRU g

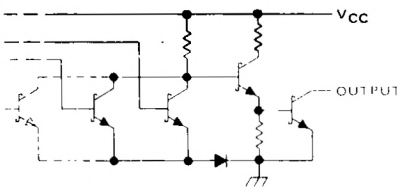

'LS248

TYPICAL OF OUTPUTS a THRU g

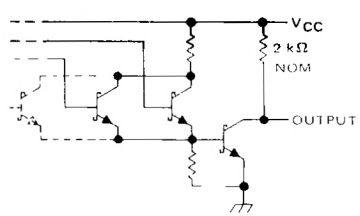

absolute maximum ratings over operating free-air temperature range (unless otherwise noted)

Supply voltage, V_{CC} (see Note 1) . . . . . 7 V
Input voltage . . . . . 5.5 V
Current forced into any output in the off state . . . . . 1 mA
Operating free-air temperature range: SN54246, SN54247 . . . . . −55°C to 125°C
SN74246, SN74247 . . . . . 0°C to 70°C
Storage temperature range . . . . . −65°C to 150°C

NOTE 1: Voltage values are with respect to network ground terminal.

recommended operating conditions

		SN54246, SN54247			SN74246			SN74247			UNIT
		MIN	NOM	MAX	MIN	NOM	MAX	MIN	NOM	MAX	
Supply voltage, V_{CC}		4.5	5	5.5	4.5	5	5.5	4.75	5	5.25	V
Off-state output voltage, $V_{O(off)}$	a thru g			30			30			30	V
On-state output current, $I_{O(on)}$	a thru g			40			40			40	mA
High-level output current, I_{OH}	$\overline{BI}$			−200			−200			−200	μA
Low-level output current, I_{OL}	$\overline{B}$			8			8			8	mA
Operating free-air temperature, T_A		−55		125	−55		125	0		70	°C

electrical characteristics over recommended operating free-air temperature range (unless otherwise noted)

PARAMETER			TEST CONDITIONS†	MIN	TYP‡	MAX	UNIT
V_{IH}	High-level input voltage			2			V
V_{IL}	Low-level input voltage					0.8	V
V_{IK}	Input clamp voltage		V_{CC} = MIN, I_I = −12 mA			1.5 V	V
V_{OH}	High-level output voltage	$\overline{BI}/\overline{RBO}$	V_{CC} = MIN, V_{IH} = 2 V, V_{IL} = 0.8 V, I_{OH} = −200 μA	2.4	3.7		V
V_{OL}	Low-level output voltage	$\overline{BI}/\overline{RBO}$	V_{CC} = MIN, V_{IH} = 2 V, V_{IL} = 0.8 V, I_{OL} = 8 mA		0.27	0.4	V
$I_{O(off)}$	Off-state output current	a thru g	V_{CC} = MAX, V_{IH} = 2 V, V_{IL} = 0.8 V, $V_{O(off)}$ = MAX			250	μA
$V_{O(on)}$	On-state output voltage	a thru g	V_{CC} = MIN, V_{IH} = 2 V, V_{IL} = 0.8 V, $I_{O(on)}$ = 40 mA		0.3	0.4	V
I_I	Input current at maximum input voltage	Any input except $\overline{BI}/\overline{RBO}$	V_{CC} = MAX, V_I = 5.5 V			1	mA
I_{IH}	High-level input current	Any input except $\overline{BI}/\overline{RBO}$	V_{CC} = MAX, V_I = 2.4 V			40	μA
I_{IL}	Low-level input current	Any input except $\overline{BI}/\overline{RBO}$	V_{CC} = MAX, V_I = 0.4 V			−1.6	mA
		$\overline{BI}/\overline{RBO}$				−4	
I_{OS}	Short-circuit output current	$\overline{BI}/\overline{RBO}$	V_{CC} = MAX			−4	mA
I_{CC}	Supply current		V_{CC} = MAX, See Note 2		64	103	mA

†For conditions shown as MIN or MAX, use the appropriate value specified under recommended operating conditions.
‡All typical values are at V_{CC} = 5 V, T_A = 25°C.
NOTE 2: I_{CC} is measured with all outputs open and all inputs at 4.5 V.

switching characteristics, V_{CC} = 5 V, T_A = 25°C

PARAMETER		TEST CONDITIONS	MIN	TYP	MAX	UNIT
t_{off}	Turn-off time from A input	C_L = 15 pF, R_L = 120 Ω, See Note 3			100	ns
t_{on}	Turn-on time from A input				100	
t_{off}	Turn-off time from $\overline{RBI}$ input				100	ns
t_{on}	Turn-on time from $\overline{RBI}$ input				100	

NOTE 3: Load circuits and voltage waveforms are shown in Section 1.

TEXAS INSTRUMENTS
POST OFFICE BOX 655012 • DALLAS, TEXAS 75265

absolute maximum ratings over operating free-air temperature range (unless otherwise noted)

Supply voltage, V_{CC} (see Note 1) . . . . . 7 V
Input voltage . . . . . 7 V
Peak output current ($t_w \leq 1$ ms, duty cycle $\leq 10\%$) . . . . . 200 mA
Current forced into any output in the off state . . . . . 1 mA
Operating free-air temperature range: SN54LS247 . . . . . −55°C to 125°C
SN74LS247 . . . . . 0°C to 70°C
Storage temperature range . . . . . −65°C to 150°C

NOTE 1: Voltage values are with respect to network ground terminal.

recommended operating conditions

		SN54LS247			SN74LS247			UNIT
		MIN	NOM	MAX	MIN	NOM	MAX	
Supply voltage, V_{CC}		4.5	5	5.5	4.75	5	5.25	V
Off-state output voltage, $V_{O(off)}$	a thru g			15			15	V
On-state output current, $I_{O(on)}$	a thru g			12			24	mA
High-level output current, I_{OH}	$\overline{BI}/\overline{RBO}$			−50			−50	μA
Low-level output current, I_{OL}	$\overline{BI}/\overline{RBO}$			1.6			3.2	mA
Operating free-air temperature, T_A		−55		125	0		70	°C

electrical characteristics over recommended operating free-air temperature range (unless otherwise noted)

PARAMETER			TEST CONDITIONS†		SN54LS247			SN74LS247			UNIT
					MIN	TYP‡	MAX	MIN	TYP‡	MAX	
V_{IH}	High-level input voltage				2			2			V
V_{IL}	Low-level input voltage						0.7			0.8	V
V_{IK}	Input clamp voltage		V_{CC} = MIN,	I_I = −18 mA			−1.5			−1.5	V
V_{OH}	High-level output voltage	$\overline{BI}/\overline{RBO}$	V_{CC} = MIN, V_{IL} = V_{IL} max,	V_{IH} = 2 V, I_{OH} = −50 μA	2.4	4.2		2.4	4.2		V
V_{OL}	Low-level output voltage	$\overline{BI}/\overline{RBO}$	V_{CC} = MIN, V_{IH} = 2 V, V_{IL} = V_{IL} max	I_{OL} = 1.6 mA		0.25	0.4		0.25	0.4	V
				I_{OL} = 3.2 mA					0.35	0.5	
$I_{O(off)}$	Off-state output current	a thru g	V_{CC} = MAX, V_{IL} = V_{IL} max,	V_{IH} = 2 V, $V_{O(off)}$ = 15 V			250			250	μA
$V_{O(on)}$	On-state output voltage	a thru g	V_{CC} = MIN, V_{IH} = 2 V, V_{IL} = V_{IL} max	$I_{O(on)}$ = 12 mA		0.25	0.4		0.25	0.4	V
				$I_{O(on)}$ = 24 mA					0.35	0.5	
I_I	Input current at maximum input voltage		V_{CC} = MAX,	V_I = 7 V			0.1			0.1	mA
I_{IH}	High-level input current		V_{CC} = MAX,	V_I = 2.7 V			20			20	μA
I_{IL}	Low-level input current	Any input except $\overline{BI}/\overline{RBO}$	V_{CC} = MAX,	V_I = 0.4 V			−0.4			−0.4	mA
		$\overline{BI}/\overline{RBO}$					−1.2			−1.2	
I_{OS}	Short-circuit output current	$\overline{BI}/\overline{RBO}$	V_{CC} = MAX		−0.3		−2	−0.3		−2	mA
I_{CC}	Supply current		V_{CC} = MAX,	See Note 2		7	13		7	13	mA

†For conditions shown as MIN or MAX, use the appropriate value specified under recommended operating conditions.
‡All typical values are at V_{CC} = 5 V, T_A = 25°C.
NOTE 2: I_{CC} is measured with all outputs open and all inputs at 4.5 V.

switching characteristics, V_{CC} = 5 V, T_A = 25°C

PARAMETER		TEST CONDITIONS	MIN	TYP	MAX	UNIT
t_{off}	Turn-off time from A input	C_L = 15 pF, R_L = 665 Ω, See Note 3			100	ns
t_{on}	Turn-on time from A input				100	
t_{off}	Turn-off time from $\overline{RBI}$ input				100	ns
t_{on}	Turn-on time from $\overline{RBI}$ input				100	

NOTE 3: Load circuits and voltage waveforms are shown in Section 1.

absolute maximum ratings over operating free-air temperature range (unless otherwise noted)

Supply voltage, V_{CC} (see Note 1) . . . . . 7 V
Input voltage . . . . . 7 V
Operating free-air temperature range: SN54LS248 . . . . . −55°C to 125°C
SN74LS248 . . . . . 0°C to 70°C
Storage temperature range . . . . . −65°C to 150°C

NOTE 1: Voltage values are with respect to network ground terminal.

recommended operating conditions

		SN54LS248			SN74LS248			UNIT
		MIN	NOM	MAX	MIN	NOM	MAX	
Supply voltage, V_{CC}		4.5	5	5.5	4.75	5	5.25	V
High-level output current, I_{OH}	a thru g			−100			−100	μA
	$\overline{BI}/\overline{RBO}$			−50			−50	
Low-level output current, I_{OL}	a thru g			2			6	mA
	$\overline{BI}/\overline{RBO}$			1.6			3.2	
Operating free-air temperature, T_A		−55		125	0		70	°C

2 TTL Devices

electrical characteristics over recommended operating free-air temperature range (unless otherwise noted)

PARAMETER			TEST CONDITIONS†		SN54LS248			SN74LS248			UNIT
					MIN	TYP‡	MAX	MIN	TYP‡	MAX	
V_{IH}	High-level input voltage				2			2			V
V_{IL}	Low-level input voltage						0.7			0.8	V
V_{IK}	Input clamp voltage		V_{CC} = MIN,	I_I = −18 mA			−1.5			−1.5	V
V_{OH}	High-level output voltage	a thru g and $\overline{BI}/\overline{RBO}$	V_{CC} = MIN, V_{IL} = V_{IL} max,	V_{IH} = 2 V, I_{OH} = MAX	2.4	4.2		2.4	4.2		V
I_O	Output current	a thru g	V_{CC} = MIN, Input conditions as for V_{OH}	V_O = 0.85 V,	−1.3	−2		−1.3	−2		mA
V_{OL}	Low-level output voltage	a thru g	V_{CC} = MIN, V_{IH} = 2 V, V_{IL} = V_{IL} max	I_{OL} = 2 mA		0.25	0.4		0.25	0.4	V
				I_{OL} = 6 mA					0.35	0.5	
		$\overline{BI}/\overline{RBO}$	V_{CC} = MIN, V_{IH} = 2 V, V_{IL} = V_{IL} max	I_{OL} = 1.6 mA		0.25	0.4		0.25	0.4	V
				I_{OL} = 3.2 mA					0.35	0.5	
I_I	Input current at maximum input voltage	Any input except $\overline{BI}/\overline{RBO}$	V_{CC} = MAX,	V_I = 7 V			0.1			0.1	mA
I_{IH}	High-level input current	Any input except $\overline{BI}/\overline{RBO}$	V_{CC} = MAX,	V_I = 2.7 V			20			20	μA
I_{IL}	Low-level input current	Any input except $\overline{BI}/\overline{RBO}$	V_{CC} = MAX,	V_I = 0.4 V			−0.4			−0.4	mA
		$\overline{BI}/\overline{RBO}$					−1.2			−1.2	
I_{OS}	Short-circuit output current	$\overline{BI}/\overline{RBO}$	V_{CC} = MAX		−0.3		−2	−0.3		−2	mA
I_{CC}	Supply current		V_{CC} = MAX,	See Note 2		25	38		25	38	mA

†For conditions shown as MIN or MAX, use the appropriate value specified under recommended operating conditions.
‡All typical values are at V_{CC} = 5 V, T_A 25°C.
NOTE 2: I_{CC} is measured with all outputs open and all inputs at 4.5 V.

switching characteristics, V_{CC} = 5 V, T_A = 25°C

PARAMETER		TEST CONDITIONS	MIN	TYP	MAX	UNIT
t_{PHL}	Propagation delay time, high-to-low-level output from A input	C_L = 15 pF, R_L = 4 kΩ, See Note 3			100	ns
t_{PLH}	Propagation delay time, low-to-high-level output from A input				100	
t_{PHL}	Propagation delay time, high-to-low-level output from $\overline{RBI}$ input	C_L = 15 pF, R_L = 6 kΩ, See Note 3			100	ns
t_{PLH}	Propagation delay time, low-to-high-level output from $\overline{RBI}$ input				100	

NOTE 3: Load circuits and voltage waveforms are shown in Section 1.

TEXAS INSTRUMENTS
POST OFFICE BOX 655012 • DALLAS, TEXAS 75265

- Three-State Versions of '151, 'LS151, 'S151
- Three-State Outputs Interface Directly with System Bus
- Perform Parallel-to-Serial Conversion
- Permit Multiplexing from N-lines to One Line
- Complementary Outputs Provide True and Inverted Data
- Fully Compatible with Most TTL Circuits

TYPE	MAX NO. OF COMMON OUTPUTS	TYPICAL AVG PROP DELAY TIME (D TO Y)	TYPICAL POWER DISSIPATION
SN54251	49	17 ns	250 mW
SN74251	129	17 ns	250 mW
SN54LS251	49	17 ns	35 mW
SN74LS251	129	17 ns	35 mW
SN54S251	39	8 ns	275 mW
SN74S251	129	8 ns	275 mW

description

These monolithic data selectors/multiplexers contain full on-chip binary decoding to select one-of-eight data sources and feature a strobe-controlled three-state output. The strobe must be at a low logic level to enable these devices. The three-state outputs permit a number of outputs to be connected to a common bus. When the strobe input is high, both outputs are in a high-impedance state in which both the upper and lower transistors of each totem-pole output are off, and the output neither drives nor loads the bus significantly. When the strobe is low, the outputs are activated and operate as standard TTL totem-pole outputs.

To minimize the possibility that two outputs will attempt to take a common bus to opposite logic levels, the output control circuitry is designed so that the average output disable time is shorter than the average output enable time. The SN54251 and SN74251 have output clamp diodes to attenuate reflections on the bus line.

SN54251, SN54LS251, SN54S251 . . . J OR W PACKAGE
SN74251 . . . N PACKAGE
SN74LS251, SN74S251 . . . D OR N PACKAGE
(TOP VIEW)

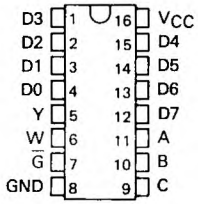

SN54LS251, SN54S251 . . . FK PACKAGE
(TOP VIEW)

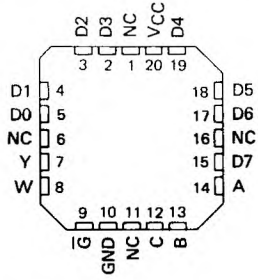

NC – No internal connection

FUNCTION TABLE

INPUTS				OUTPUTS	
SELECT			ENABLE		
C	B	A	$\overline{G}$	Y	W
X	X	X	H	Z	Z
L	L	L	L	D0	$\overline{D0}$
L	L	H	L	D1	$\overline{D1}$
L	H	L	L	D2	$\overline{D2}$
L	H	H	L	D3	$\overline{D3}$
H	L	L	L	D4	$\overline{D4}$
H	L	H	L	D5	$\overline{D5}$
H	H	L	L	D6	$\overline{D6}$
H	H	H	L	D7	$\overline{D7}$

H = high logic level, L = low logic level
X = irrelevant, Z = high impedance (off)
D0, D1 . . . D7 = the level of the respective D input

PRODUCTION DATA documents contain information current as of publication date. Products conform to specifications per the terms of Texas Instruments standard warranty. Production processing does not necessarily include testing of all parameters.

logic diagram (positive logic)

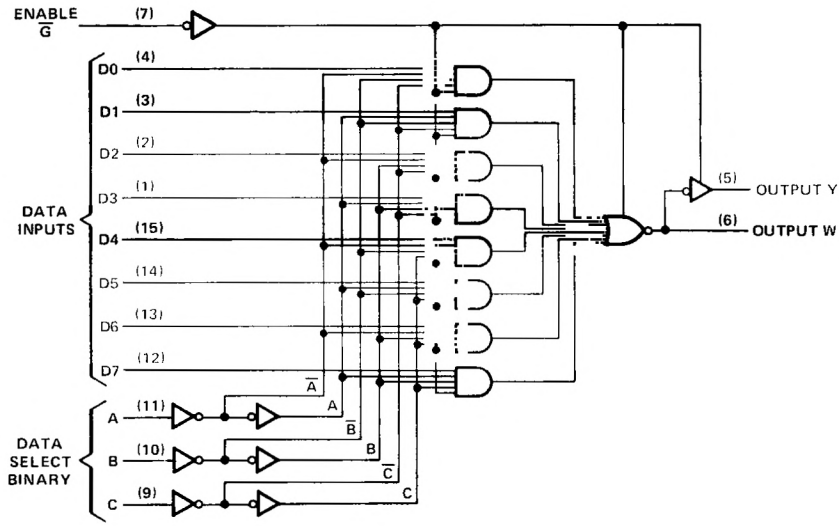

logic symbol†

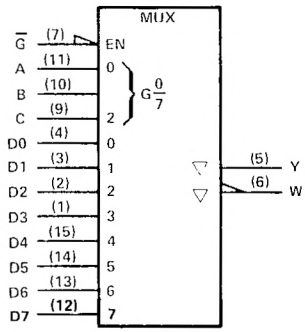

†This symbol is in accordance with ANSI/IEEE Std. 91-1984 and IEC Publication 617-12.
Pin numbers shown are for D, J, N, and W packages.

TEXAS INSTRUMENTS
POST OFFICE BOX 655012 • DALLAS, TEXAS 75265

absolute maximum ratings over operating free-air temperature range (unless otherwise noted)

Supply voltage, V_{CC} (see Note 1) . . . . . 7 V
Input voltage . . . . . 5.5 V
Off-state output voltage . . . . . 5.5 V
Operating free-air temperature range: SN54251 . . . . . −55°C to 125°C
SN74251 . . . . . 0°C to 70°C
Storage temperature range . . . . . −65°C to 150°C

NOTE 1: Voltage values are with respect to network ground terminal.

recommended operating conditions

	SN54251			SN74251			UNIT
	MIN	NOM	MAX	MIN	NOM	MAX	
Supply voltage, V_{CC}	4.5	5	5.5	4.75	5	5.25	V
High-level output current, I_{OH}			−2			−5.2	mA
Low-level output current, I_{OL}			16			16	mA
Operating free-air temperature, T_A	−55		125	0		70	°C

electrical characteristics over recommended operating free-air temperature range (unless otherwise noted)

PARAMETER		TEST CONDITIONS†		MIN	TYP‡	MAX	UNIT
V_{IH}	High-level input voltage			2			V
V_{IL}	Low-level input voltage					0.8	V
V_{IK}	Input clamp voltage	V_{CC} = MIN, I_I = −12 mA				−1.5	V
V_{OH}	High-level output voltage	V_{CC} = MIN, V_{IH} = 2 V, V_{IL} = 0.8 V, I_{OH} = MAX		2.4	3.2		V
V_{OL}	Low-level output voltage	V_{CC} = MIN, V_{IH} = 2 V, V_{IL} = 0.8 V, I_{OL} = 16 mA			0.2	0.4	V
I_{OZ}	Off-state (high-impedance-state) output current	V_{CC} = MAX, V_{IH} = 2 V	V_O = 2.4 V			40	μA
			V_O = 0.4 V			−40	
V_O	Output clamp voltage	V_{CC} = MAX, V_{IH} = 4.5 V	I_O = −12 mA			−1.5	V
			I_O = 12 mA			V_{CC}+1.5	
I_I	Input current at maximum input voltage	V_{CC} = MAX, V_I = 5.5 V				1	mA
I_{IH}	High-level input current	V_{CC} = MAX, V_I = 2.4 V				40	μA
I_{IL}	Low-level input current	V_{CC} = MAX, V_I = 0.4 V				−1.6	mA
I_{OS}	Short-circuit output current§	V_{CC} = MAX		−18		−55	mA
I_{CC}	Supply current	V_{CC} = MAX, All outputs open	All inputs at 4.5 V,		38	62	mA

†For conditions shown as MIN or MAX, use the appropriate value specified under recommended operating conditions for the applicable type.
‡All typical values are at V_{CC} = 5 V, T_A = 25°C.
§Not more than one output should be shorted at a time.

switching characteristics, V_{CC} = 5 V, T_A = 25°C

PARAMETER†	FROM (INPUT)	TO (OUTPUT)	TEST CONDITIONS	MIN	TYP	MAX	UNIT
t_{PLH}	A, B, or C (4 levels)	Y	C_L = 50 pF, R_L = 400 Ω, See Note 2		29	45	ns
t_{PHL}					28	45	
t_{PLH}	A, B, or C (3 levels)	W			20	33	ns
t_{PHL}					21	33	
t_{PLH}	Any D	Y			17	28	ns
t_{PHL}					18	28	
t_{PLH}	Any D	W			10	15	ns
t_{PHL}					9	15	
t_{PZH}	$\overline{G}$	Y			17	27	ns
t_{PZL}					26	40	
t_{PZH}	$\overline{G}$	W			17	27	ns
t_{PZL}					24	40	
t_{PHZ}	$\overline{G}$	Y	C_L = 5 pF, R_L = 400 Ω, See Note 2		5	8	ns
t_{PLZ}					15	23	
t_{PHZ}	$\overline{G}$	W			5	8	ns
t_{PLZ}					15	23	

†t_{PLH} = Propagation delay time, low-to-high-level output
t_{PHL} = Propagation delay time, high-to-low-level output
t_{PZH} = Output enable time to high level
t_{PZL} = Output enable time to low level
t_{PHZ} = Output disable time from high level
t_{PLZ} = Output disable time from low level
NOTE 2: Load circuits and voltage waveforms are shown in Section 1.

schematics of inputs and outputs

EQUIVALENT OF EACH INPUT

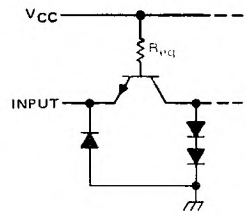

Select: R_{eq} = 6 kΩ NOM
Other Inputs: R_{eq} = 4 kΩ NOM

TYPICAL OF BOTH OUTPUTS

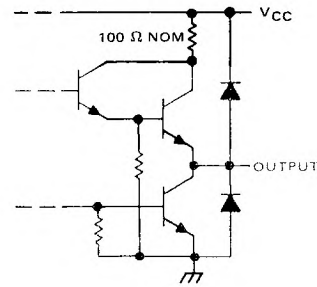

TEXAS INSTRUMENTS
POST OFFICE BOX 655012 • DALLAS, TEXAS 75265

absolute maximum ratings over operating free-air temperature range (unless otherwise noted)

Supply voltage, V_{CC} (see Note 1) . . . . . 7 V
Input voltage . . . . . 7 V
Off-state output voltage . . . . . 5.5 V
Operating free-air temperature range: SN54LS251 . . . . . 55°C to 125°C
SN74LS251 . . . . . 0°C to 70°C
Storage temperature range . . . . . −65°C to 150°C

NOTE 1: Voltage values are with respect to network ground terminal.

recommended operating conditions

		SN54LS251			SN74LS251			UNIT
		MIN	NOM	MAX	MIN	NOM	MAX	
V_{CC}	Supply voltage	4.5	5	5.5	4.75	5	5.25	V
V_{IH}	High-level input voltage	2			2			V
V_{IL}	Low-level input voltage			0.7			0.8	V
I_{OH}	High-level output current			−1			−2.6	mA
I_{OL}	Low-level output current			4			8	mA
T_A	Operating free-air temperature	−55		125	0		70	°C

electrical characteristics over recommended operating free-air temperature range (unless otherwise noted)

PARAMETER		TEST CONDITIONS†		SN54LS251			SN74LS251			UNIT
				MIN	TYP‡	MAX	MIN	TYP‡	MAX	
V_{IK}		V_{CC} = MIN, I_I = −18 mA				−1.5			−1.5	V
V_{OH}		V_{CC} = MIN, V_{IH} = 2 V, V_{IL} = MAX, I_{OH} = MAX		2.4	3.4		2.4	3.1		V
V_{OL}		V_{CC} = MIN, V_{IH} = 2 V, V_{IL} = MAX	I_{OL} = 4 mA		0.25	0.4		0.25	0.4	V
			I_{OL} = 8 mA					0.35	0.5	
I_{OZ}		V_{CC} = MAX, V_{IH} = 2 V	V_O = 2.7 V			20			20	μA
			V_O = 0.4 V			−20			−20	
I_I		V_{CC} = MAX, V_I = 7 V				0.1			0.1	mA
I_{IH}		V_{CC} = MAX, V_I = 2.7 V				20			20	μA
I_{IL}	Enable $\overline{G}$	V_{CC} = MAX, V_I = 0.4				−0.2			−0.2	mA
	All other					−0.4			−0.4	
I_{OS}§		V_{CC} = MAX		−30		−130	−30		−130	mA
I_{CC}		V_{CC} = MAX, See Note 3	Condition A		6.1	10		6.1	10	mA
			Condition B		7.1	12		7.1	12	

† For conditions shown as MIN or MAX, use the appropriate value specified under recommended operating conditions for the applicable type.
‡ All typical values are at V_{CC} = 5 V, T_A = 25°C.
§ Not more than one output should be shorted at a time, and duration of the short-circuit should not exceed one second.
NOTE 3: I_{CC} is measured with the outputs open and all data and select inputs at 4.5 V under the following conditions:
A. Enable grounded
B. Strobe at 4.5 V

switching characteristics, V_{CC} = 5 V, T_A = 25°C

PARAMETER†	FROM (INPUT)	TO (OUTPUT)	TEST CONDITIONS	MIN	TYP	MAX	UNIT
t_{PLH}	A, B, or C (4 levels)	Y	C_L = 15 pF, R_L = 2 kΩ, See Note 2		29	45	ns
t_{PHL}					28	45	
t_{PLH}	A, B, or C (3 levels)	W			20	33	ns
t_{PHL}					21	33	
t_{PLH}	Any D	Y			17	28	ns
t_{PHL}					18	28	
t_{PLH}	Any D	W			10	15	ns
t_{PHL}					9	15	
t_{PZH}	$\overline{G}$	Y			30	45	ns
t_{PZL}					26	40	
t_{PZH}	$\overline{G}$	W			17	27	ns
t_{PZL}					24	40	
t_{PHZ}	$\overline{G}$	Y	C_L = 5 pF, R_L = 2 kΩ, See Note 2		30	45	ns
t_{PLZ}					15	25	
t_{PHZ}	$\overline{G}$	W			37	55	ns
t_{PLZ}					15	25	

†t_{PLH} = Propagation delay time, low-to-high-level output
t_{PHL} = Propagation delay time, high-to-low-level output
t_{PZH} = Output enable time to high level
t_{PZL} = Output enable time to low level
t_{PHZ} = Output disable time from high level
t_{PLZ} = Output disable time from low level
NOTE 2: Load circuits and voltage waveforms are shown in Section 1.

schematics of inputs and outputs

EQUIVALENT OF $\overline{G}$ INPUT

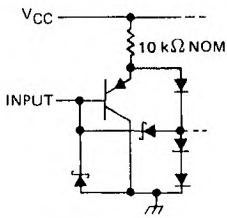

EQUIVALENT OF ALL OTHER INPUTS

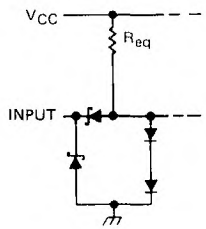

A, B, C: R_{eq} = 20 kΩ NOM
D0 thru D7: R_{eq} = 17 kΩ NOM

TYPICAL OF BOTH OUTPUTS

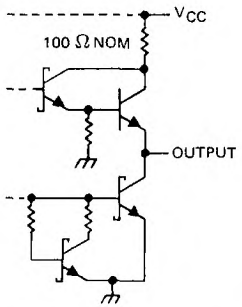

TEXAS INSTRUMENTS
POST OFFICE BOX 655012 • DALLAS, TEXAS 75265

absolute maximum ratings over operating free-air temperature range (unless otherwise noted)

Supply voltage, V_{CC} (see Note 1) . . . . . 7 V
Input voltage . . . . . 5.5 V
Off-state output voltage . . . . . 5.5 V
Operating free-air temperature range: SN54S251 . . . . . −55°C to 125°C
SN74S251 . . . . . 0°C to 70°C
Storage temperature range . . . . . −65°C to 150°C

NOTE 1: Voltage values are with respect to network ground terminal.

recommended operating conditions

	SN54S251			SN74S251			UNIT
	MIN	NOM	MAX	MIN	NOM	MAX	
Supply voltage, V_{CC}	4.5	5	5.5	4.75	5	5.25	V
High-level output current, I_{OH}			−2			−6.5	mA
Low-level output current, I_{OL}			20			20	mA
Operating free-air temperature, T_A	−55		125	0		70	°C

electrical characteristics over recommended operating free-air temperature range (unless otherwise noted)

PARAMETER		TEST CONDITIONS†			MIN	TYP‡	MAX	UNIT
V_{IH}	High-level input voltage				2			V
V_{IL}	Low-level input voltage						0.8	V
V_{IK}	Input clamp voltage	V_{CC} = MIN, I_I = −18 mA					−1.2	V
V_{OH}	High-level output voltage	V_{CC} = MIN, V_{IH} = 2 V, V_{IL} = 0.8 V, I_{OH} = MAX		SN54S'	2.4	3.4		V
				SN74S'	2.4	3.2		
V_{OL}	Low-level output voltage	V_{CC} = MIN, V_{IH} = 2 V, V_{IL} = 0.8 V, I_{OL} = 20 mA					0.5	V
I_{OZ}	Off-state (high-impedance-state) output current	V_{CC} = MAX, V_{IH} = 2 V	V_O = 2.4 V				50	μA
			V_O = 0.5 V				−50	
I_I	Input current at maximum input voltage	V_{CC} = MAX, V_I = 5.5 V					1	mA
I_{IH}	High-level input current	V_{CC} = MAX, V_I = 2.7 V					50	μA
I_{IL}	Low-level input current	V_{CC} = MAX, V_I = 0.5 V					−2	mA
I_{OS}	Short-circuit output current§	V_{CC} = MAX			−40		−100	mA
I_{CC}	Supply current	V_{CC} = MAX, All inputs at 4.5 V, All outputs open				55	85	mA

†For conditions shown as MIN or MAX, use the appropriate value specified under recommended operating conditions for the applicable type.
‡All typical values are at V_{CC} = 5 V, T_A = 25°C.
§Not more than one output should be shorted at a time, and duration of the short-circuit should not exceed one second.

switching characteristics, V_{CC} = 5 V, T_A = 25°C

PARAMETER†	FROM (INPUT)	TO (OUTPUT)	TEST CONDITIONS	MIN	TYP	MAX	UNIT
t_{PLH}	A, B, or C (4 levels)	Y	C_L = 15 pF, R_L = 280 Ω, See Note 2		12	18	ns
t_{PHL}					13	19.5	
t_{PLH}	A, B, or C (3 levels)	W			10	15	ns
t_{PHL}					9	13.5	
t_{PLH}	Any D	Y			8	12	ns
t_{PHL}					8	12	
t_{PLH}	Any D	W			4.5	7	ns
t_{PHL}					4.5	7	
t_{PZH}	$\overline{G}$	Y	C_L = 50 pF, R_L = 280 Ω, See Note 2		13	19.5	ns
t_{PZL}					14	21	
t_{PZH}	$\overline{G}$	W			13	19.5	ns
t_{PZL}					14	21	
t_{PHZ}	$\overline{G}$	Y	C_L = 5 pF, R_L = 280 Ω, See Note 2		5.5	8.5	ns
t_{PLZ}					9	14	
t_{PHZ}	$\overline{G}$	W			5.5	8.5	ns
t_{PLZ}					9	14	

†t_{PLH} = Propagation delay time, low-to-high-level output
t_{PHL} = Propagation delay time, high-to-low-level output
t_{PZH} = Output enable time to high level
t_{PZL} = Output enable time to low level
t_{PHZ} = Output disable time from high level
t_{PLZ} = Output disable time from low level
NOTE 2: Load circuits and voltage waveforms are shown in Section 1.

schematics of inputs and outputs

EQUIVALENT OF EACH INPUT

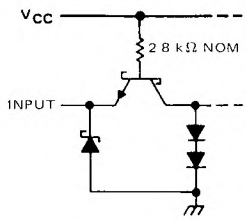

TYPICAL OF BOTH OUTPUTS

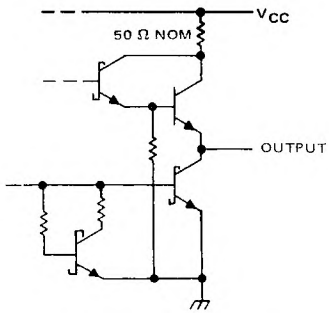

TEXAS INSTRUMENTS
POST OFFICE BOX 655012 • DALLAS, TEXAS 75265

SEPTEMBER 1972 – REVISED MARCH 1988

- Three-State Version of SN54/74LS153, SN54/74S153
- Schottky-Diode-Clamped Transistors
- Permits Multiplexing from N Lines to 1 Line
- Performs Parallel-to Serial Conversion
- Fully Compatible with Most TTL Circuits
- Low Power Dissipation
  'LS253 . . . 35 mW Typical
  'S253 . . . 225 mW Typical

SN54LS253, SN54S253 . . . J OR W PACKAGE
SN74LS253, SN74S253 . . . D OR N PACKAGE
(TOP VIEW)

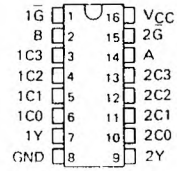

SN54LS253, SN54S253 . . . FK PACKAGE
(TOP VIEW)

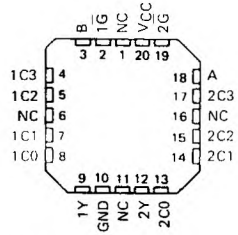

NC-No internal connection

description

Each of these Schottky-clamped data selectors/multiplexers contains inverters and drivers to supply fully complementary, on-chip, binary decoding data selection to the AND-OR gates. Separate output control inputs are provided for each of the two four-line sections.

The three-state outputs can interface with and drive data lines of bus-organized systems. With all but one of the common outputs disabled (at a high-impedance state) the low-impedance of the single enabled output will drive the bus line to a high or low logic level.

FUNCTION TABLE

SELECT INPUTS		DATA INPUTS				OUTPUT CONTROL	OUTPUT
B	A	C0	C1	C2	C3	G̅	Y
X	X	X	X	X	X	H	Z
L	L	L	X	X	X	L	L
L	L	H	X	X	X	L	H
L	H	X	L	X	X	L	L
L	H	X	H	X	X	L	H
H	L	X	X	L	X	L	L
H	L	X	X	H	X	L	H
H	H	X	X	X	L	L	L
H	H	X	X	X	H	L	H

Address inputs A and B are common to both sections.
H = high level, L = low level, X = irrelevant, Z = high impedance (off)

absolute maximum ratings over operating free-air temperature range (unless otherwise noted)

Supply voltage, V_{CC} (see Note 1) . . . . . 7 V
Input voltage: 'LS253 . . . . . 7 V
'S253 . . . . . 5.5 V
Off-state output voltage . . . . . 5.5 V
Operating free-air temperature range: SN54LS253, SN54S253 . . . . . −55°C to 125°C
SN74LS253, SN74S253 . . . . . 0°C to 70°C
Storage temperature range . . . . . −65°C to 150°C

NOTE 1: Voltage values are with respect to network ground terminal.

PRODUCTION DATA documents contain information current as of publication date. Products conform to specifications per the terms of Texas Instruments standard warranty. Production processing does not necessarily include testing of all parameters.

logic symbol†

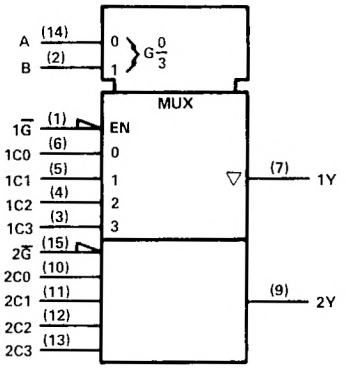

† This symbol is in accordance with ANSI/IEEE Std 91-1984 and IEC Publication 617-12.

logic diagram (positive logic)

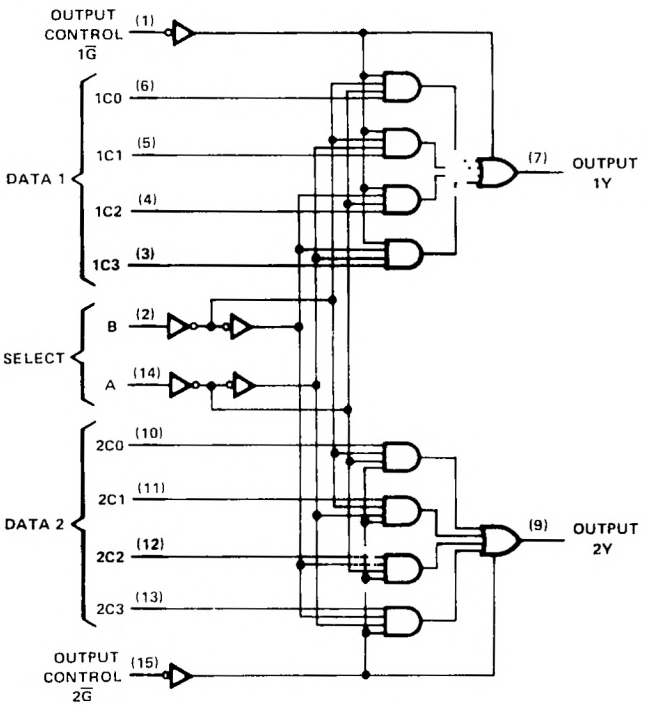

Pin numbers shown are for D, J, N, and W packages.

TEXAS INSTRUMENTS
POST OFFICE BOX 655012 • DALLAS, TEXAS 75265

schematic (each selector/multiplexer, and the common select section)

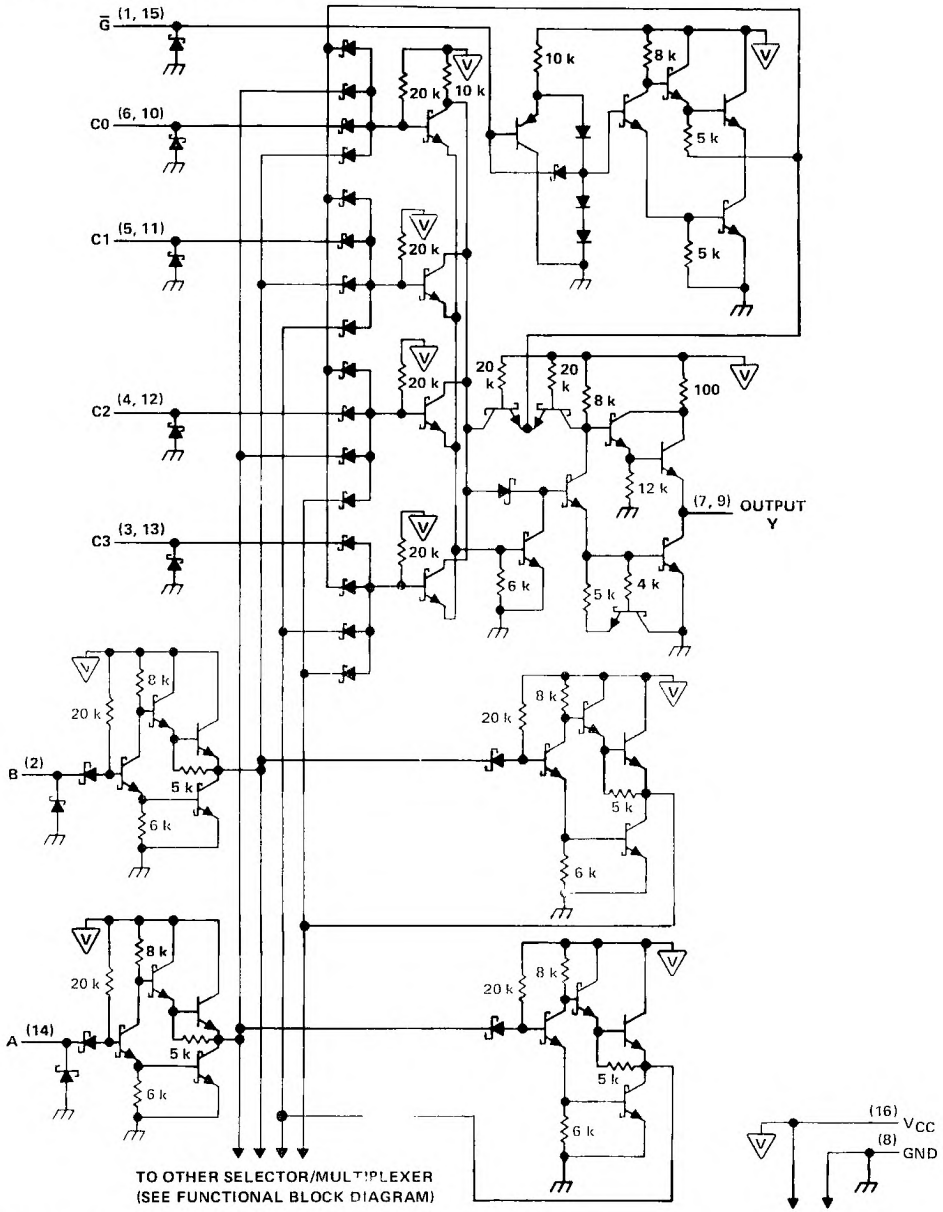

Pin numbers shown are for D, J, N, and W packages.

recommended operating conditions

		SN54LS253			SN74LS253			UNIT
		MIN	NOM	MAX	MIN	NOM	MAX	
V_{CC}	Supply voltage	4.5	5	5.5	4.75	5	5.25	V
V_{IH}	High-level input voltage	2			2			V
V_{IL}	Low-level input voltage			0.7			0.8	V
I_{OH}	High-level output current			−1			−2.6	mA
I_{OL}	Low-level output current			4			8	mA
T_A	Operating free-air temperature	−55		125	0		70	°C

electrical characteristics over recommended operating free-air temperature range (unless otherwise noted)

PARAMETER	TEST CONDITIONS†			SN54LS253			SN74LS253			UNIT
				MIN	TYP‡	MAX	MIN	TYP‡	MAX	
V_{IK}	V_{CC} = MIN, I_I = −18 mA					−1.5			−1.5	V
V_{OH}	V_{CC} = MIN, V_{IH} = 2 V, V_{IL} = MAX,		I_{OH} = MAX	2.4	3.4		2.4	3.1		V
V_{OL}	V_{CC} = MIN, V_{IH} = 2 V, V_{IL} = MAX		I_{OL} = 4 mA		0.25	0.4		0.25	0.4	V
			I_{OL} = 8 mA					0.25	0.5	
I_{OZ}	V_{CC} = MAX, V_{IH} = 2 V		V_O = 2.7 V			20			20	μA
			V_O = 0.4 V			−20			−20	
I_I	V_{CC} = MAX, V_I = 7 V					0.1			0.1	mA
I_{IH}	V_{CC} = MAX, V_I = 2.7 V					20			20	μA
I_{IL}	V_{CC} = MAX, V_I = 0.4 V		$\overline{G}$			−0.2			−0.2	mA
			All other			−0.4			−0.4	
I_{OS}§	V_{CC} = MAX			−30		−130	−30		−130	mA
I_{CC}	V_{CC} = MAX, See Note 2		Condition A		7	12		7	12	mA
			Condition B		8.5	14		8.5	14	

† For conditions shown as MIN or MAX, use the appropriate value specified under recommended operating conditions.
‡ All typical values are at V_{CC} = 5 V, T_A = 25°C.
§ Not more than one output should be shorted at a time, and duration for the short-circuit should exceed one second.
NOTE 2: I_{CC} is measured with the outputs open under the following conditions:
A. All inputs grounded.
B. Output control at 4.5 V, all inputs grounded.

switching characteristics, V_{CC} = 5 V, T_A = 25°C

PARAMETER	FROM (INPUT)	TO (OUTPUT)	TEST CONDITIONS	MIN	TYP	MAX	UNIT
t_{PLH}	Data	Y	C_L = 15 pF, R_L = 2 kΩ, See Note 3		17	25	ns
t_{PHL}					13	20	
t_{PLH}	Select	Y			30	45	ns
t_{PHL}					21	32	
t_{PZH}	Output Control	Y			15	28	ns
t_{PZL}					15	23	
t_{PHZ}	Output Control	Y	C_L = 5 pF, R_L = 2 kΩ, See Note 3		27	41	ns
t_{PLZ}					18	27	

NOTE 3: Load circuits and voltage waveforms are shown in Section 1.

TEXAS INSTRUMENTS
POST OFFICE BOX 655012 • DALLAS, TEXAS 75265

recommended operating conditions

		SN54S253			SN74S253			UNIT
		MIN	NOM	MAX	MIN	NOM	MAX	
V_{CC}	Supply voltage	4.5	5	5.5	4.75	5	5.25	V
V_{IH}	High-level input voltage	2			2			V
V_{IL}	Low-level input voltage			0.8			0.8	V
I_{OH}	High-level output current			−2			−6.5	mA
I_{OL}	Low-level output current			20			20	mA
T_A	Operating free-air temperature	−55		125	0		70	°C

electrical characteristics over recommended operating free-air temperature range (unless otherwise noted)

PARAMETER	TEST CONDITIONS†		MIN	TYP‡	MAX	UNIT
V_{IK}	V_{CC} = MIN, I_I = −18 mA				−1.2	V
V_{OH}	V_{CC} = MIN, V_{IH} = 2 V, V_{IL} = 0.8 V, I_{OH} = MAX	Series 54S	2.5	3.4		V
		Series 74S	2.7	3.4		
V_{OL}	V_{CC} = MIN, V_{IH} = 2 V, V_{IL} = 0.8 V, I_{OL} = 20 mA				0.5	V
I_{OZ}	V_{CC} = MAX, V_{IH} = 2 V	V_O = 2.4 V			50	μA
		V_O = 0.5 V			−50	
I_I	V_{CC} = MAX, V_I = 5.5 V				1	mA
I_{IH}	V_{CC} = MAX, V_I = 2.7 V				50	μA
I_{IL}	V_{CC} = MAX, V_I = 0.5 V	$\overline{G}$ = 0.8 V,			−2	mA
		$\overline{G}$ = 2 V			−0.25	
I_{OS}§	V_{CC} = MAX		−40		−100	mA
I_{CC}	V_{CC} = MAX, See Note 2	Condition A		45	70	mA
		Condition B		65	85	

† For conditions shown as MIN or MAX, use the appropriate value specified under recommended operating conditions.
‡ All typical values are at V_{CC} = 5 V, T_A = 25°C.
§ Not more than one output should be shorted at a time and duration of short-circuit should not exceed one second.
NOTE 2: I_{CC} is measured with the outputs open under the following conditions:
A. All inputs grounded.
B. Output control at 4.5 V, all inputs grounded.

switching characteristics, V_{CC} = 5 V, T_A = 25°C

PARAMETER	FROM (INPUT)	TO (OUTPUT)	TEST CONDITIONS	MIN	TYP	MAX	UNIT
t_{PLH}	Data	Y	R_L = 280 Ω, C_L = 15 pF, See Note 3		6	9	ns
t_{PHL}					6	9	
t_{PLH}	Select	Y			11.5	18	ns
t_{PHL}					12	18	
t_{PZH}	Output Control	Y			11	16.5	ns
t_{PZL}					12	18	
t_{PHZ}	Output Control	Y	R_L = 280 Ω, C_L = 5 pF, See Note 3		6.5	9.5	ns
t_{PLZ}					10	15	

NOTE 3: Load circuits and voltage waveforms are shown in Section 1.

- **Three-State Outputs Interface Directly with System Bus**
- **'LS257B and 'LS258B Offer Three Times the Sink-Current Capability of the Original 'LS257 and 'LS258**
- **Same Pin Assignments as SN54LS157, SN74LS157, SN54S157, SN74S157, and SN54LS158, SN74LS158, SN54S158, SN74S158**
- **Provides Bus Interface from Multiple Sources in High-Performance Systems**

	AVERAGE PROPAGATION DELAY FROM DATA INPUT	TYPICAL POWER DISSIPATION†
'LS257B	9 ns	55 mW
'LS258B	9 ns	55 mW
'S257	4.8 ns	320 mW
'S258	4 ns	280 mW

†Off state (worst case)

description

These devices are designed to multiplex signals from four-bit data sources to four-output data lines in bus-organized systems. The 3-state outputs will not load the data lines when the output control pin ($\overline{G}$) is at a high-logic level.

Series 54LS and 54S are characterized for operation over the full military temperature range of −55°C to 125°C; Series 74LS and 74S are characterized for operation from 0°C to 70°C.

**SN54LS257B, SN54S257,
SN54LS258B, SN54S258 . . . J OR W PACKAGE
SN74LS257B, SN74S257,
SN74LS258B, SN74S258 . . . D OR N PACKAGE
(TOP VIEW)**

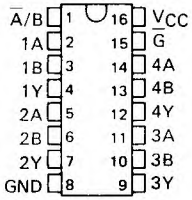

**SN54LS257B, SN54S257,
SN54LS258B, SN54S258 . . . FK PACKAGE
(TOP VIEW)**

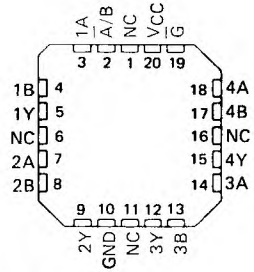

NC–No internal connection.

FUNCTION TABLE

INPUTS				OUTPUT Y	
OUTPUT CONTROL	SELECT	A	B	'LS257B 'S257	'LS258B 'S258
H	X	X	X	Z	Z
L	L	L	X	L	H
L	L	H	X	H	L
L	H	X	L	L	H
L	H	X	H	H	L

H = high level, L = low level, X = irrelevant,
Z = high impedance (off)

PRODUCTION DATA documents contain information current as of publication date. Products conform to specifications per the terms of Texas Instruments standard warranty. Production processing does not necessarily include testing of all parameters.

logic diagrams (positive logic)

'LS257B, 'S257

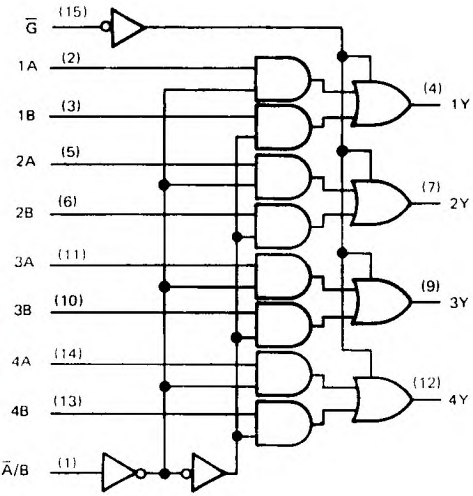

'LS258B, 'S258

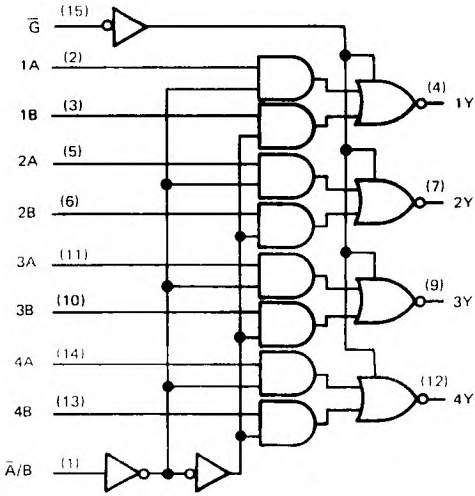

logic symbols†

'LS257B

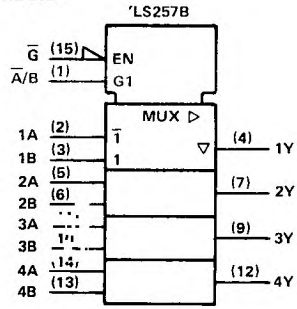

'LS258B

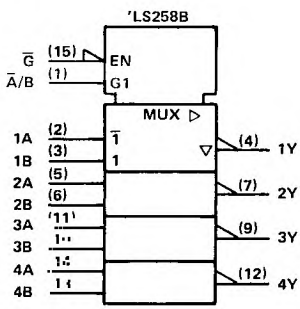

'S257

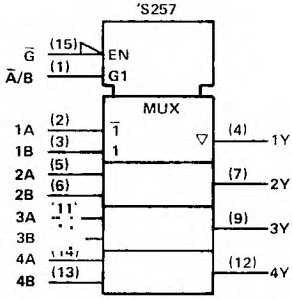

'S258

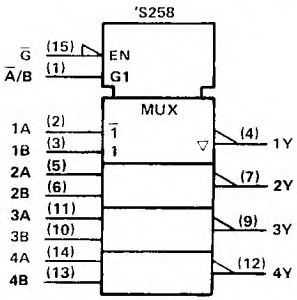

†These symbols are in accordance with ANSI/IEEE Std 91-1984 and IEC Publication 617-12.
Pin numbers shown are for D, J, N, and W packages.

TEXAS INSTRUMENTS
POST OFFICE BOX 655012 • DALLAS, TEXAS 75265

schematics of inputs and outputs

'LS257B, 'LS258B

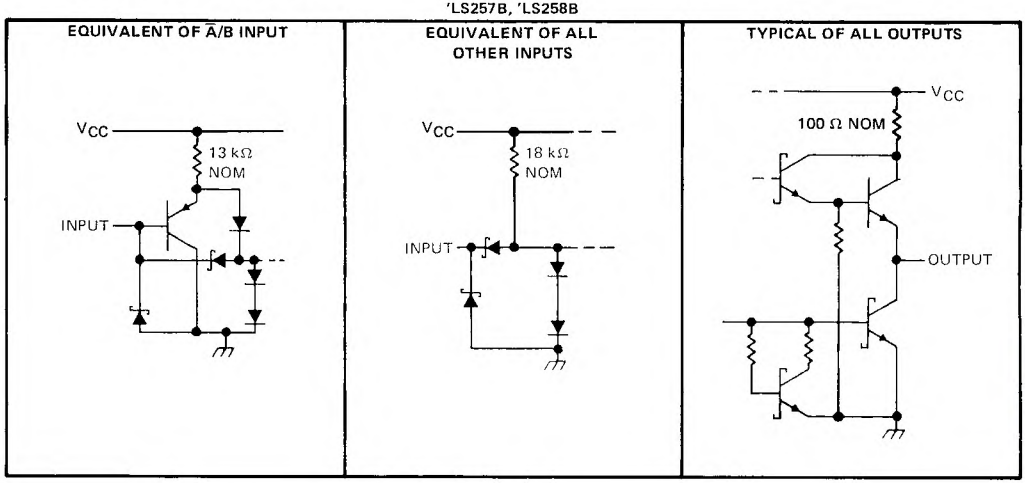

'S257, 'S258

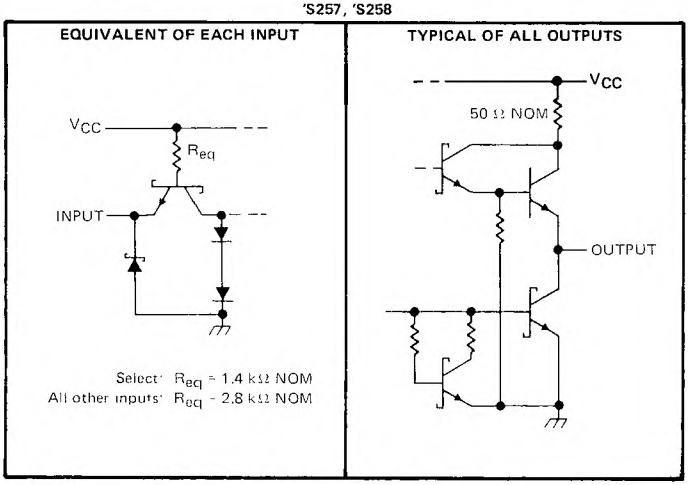

absolute maximum ratings over operating free-air temperature range (unless otherwise noted)

Supply voltage, V_{CC} (see Note 1) . . . . . 7 V
Input voltage: 'LS257B, 'LS258B Circuits . . . . . 7 V
'S257, 'S258 Circuits . . . . . 5.5 V
Off-state output voltage . . . . . 5.5 V
Operating free-air temperature range: SN54LS', SN54S' Circuits . . . . . −55°C to 125°C
SN74LS', SN74S' Circuits . . . . . 0°C to 70°C
Storage temperature range . . . . . −65°C to 150°C

NOTE 1: Voltage values are with respect to network ground terminal.

recommended operating conditions

		SN54LS'			SN74LS'			UNIT
		MIN	NOM	MAX	MIN	NOM	MAX	
V_{CC}	Supply voltage	4.5	5	5.5	4.75	5	5.25	V
V_{IH}	High-level input voltage	2			2			V
V_{IL}	Low-level input voltage			0.7			0.8	V
I_{OH}	High-level output current			−1			−2.6	mA
I_{OL}	Low-level output current			12			24	mA
T_A	Operating free-air temperature	−55		125	0		70	°C

electrical characteristics over recommended operating free-air temperature range (unless otherwise noted)

PARAMETER		TEST CONDITIONS†			SN54LS'			SN74LS'			UNIT
					MIN	TYP‡	MAX	MIN	TYP‡	MAX	
V_{IK}		V_{CC} = MIN, I_I = −18 mA					−1.5			−1.5	V
V_{OH}		V_{CC} = MIN, V_{IH} = 2 V, V_{IL} = MAX, I_{OH} = MAX			2.4	3.4		2.4	3.1		V
V_{OL}		V_{CC} = MIN, V_{IH} = 2 V, V_{IL} = MAX,		I_{OL} = 12 mA		0.25	0.4		0.25	0.4	V
				I_{OL} = 24 mA					0.35	0.5	
I_{OZH}		V_{CC} = MAX, V_{IH} = 2 V, V_O = 2.7 V					20			20	μA
I_{OZL}		V_{CC} = MAX, V_{IH} = 2 V, V_O = 0.4 V					−20			−20	μA
I_I		V_{CC} = MAX, V_I = 7 V					0.1			0.1	mA
I_{IH}		V_{CC} = MAX, V_I = 2.7 V					20			20	μA
I_{IL}		V_{CC} = MAX, V_I = 0.4 V					−0.4			−0.4	mA
I_{OS}§		V_{CC} = MAX,			−30		−130	−30		−130	mA
I_{CC}	All outputs high	V_{CC} = MAX, See Note 2	'LS257B			8	12		8	12	mA
	All outputs low					12	18		12	18	
	All outputs off					13	19		13	19	
	All outputs high		'LS258B			6	9		6	9	
	All outputs low					10	15		10	15	
	All outputs off					11	16		11	16	

†For conditions shown as MIN or MAX, use the appropriate value specified under recommended operating conditions.
‡All typical values are at V_{CC} = 5 V, T_A = 25°C.
§Not more than one output should be shorted at a time and duration of the short-circuit should not exceed one second.
NOTE 2: I_{CC} is measured with all outputs open and all possible inputs grounded while achieving the stated output conditions.

switching characteristics, V_{CC} = 5 V, T_A = 25°C, R_L = 667 Ω

PARAMETER¶	FROM (INPUT)	TO (OUTPUT)	TEST CONDITIONS		'LS257B			'LS258B			UNIT
					MIN	TYP	MAX	MIN	TYP	MAX	
t_{PLH}	Data	Any	C_L = 45 pF,	See Note 3		8	13		7	12	ns
t_{PHL}						10	15		11	17	
t_{PLH}	Select	Any				16	21		14	21	ns
t_{PHL}						17	24		19	24	
t_{PZH}	Output Control	Any				15	30		15	30	ns
t_{PZL}						19	30		20	30	
t_{PHZ}	Output Control	Any	C_L = 5 pF,	See Note 3		18	30		18	30	ns
t_{PLZ}						16	25		16	25	

¶t_{PLH} = propagation delay time, low-to-high-level output
t_{PHL} = propagation delay time, high-to-low-level output
t_{PZH} = output enable time to high level
t_{PZL} = output enable time to low level
t_{PHZ} = output disable time from high level
t_{PLZ} = output disable time from low level
NOTE 3: Load circuits and voltage waveforms are shown in Section 1.

TEXAS INSTRUMENTS
POST OFFICE BOX 655012 • DALLAS, TEXAS 75265

recommended operating conditions

	'S'			'LS'			UNIT
	MIN	NOM	MAX	MIN	NOM	MAX	
Supply voltage, V_{CC}	4.5	5	5.5	4.75	5	5.25	V
High-level output current, I_{OH}			−2			−6.5	mA
Low-level output current, I_{OL}			20			20	mA
Operating free-air temperature, T_A	−55		125	0		70	°C

electrical characteristics over recommended operating free-air temperature range (unless otherwise noted)

PARAMETER			TEST CONDITIONS†		'S257 MIN	'S257 TYP‡	'S257 MAX	'S258 MIN	'S258 TYP‡	'S258 MAX	UNIT
V_{IH}	High-level input voltage				2			2			V
V_{IL}	Low-level input voltage						0.8			0.8	V
V_{IK}	Input clamp voltage		V_{CC} = MIN, I_I = −18 mA				−1.2			−1.2	V
V_{OH}	High-level output voltage		V_{CC} = MIN, V_{IH} = 2 V, V_{IL} = 0.8 V, I_{OH} = −1 mA	SN74S'	2.7			2.7			V
			V_{CC} = MIN, V_{IH} = 2 V, V_{IL} = 0.8 V, I_{OH} = MAX	SN54S'	2.4	3.4		2.4	3.4		
				SN74S'	2.4	3.2		2.4	3.2		
V_{OL}	Low-level output voltage		V_{CC} = MIN, V_{IH} = 2 V, V_{IL} = 0.8 V, I_{OL} = 20 mA				0.5			0.5	V
I_{OZH}	Off-state output current, high-level voltage applied		V_{CC} = MAX, V_{IH} = 2 V, V_O = 2.4 V				50			50	μA
I_{OZL}	Off-state output current, low-level voltage applied		V_{CC} = MAX, V_{IH} = 2 V, V_O = 0.5 V				−50			−50	μA
I_I	Input current at maximum input voltage		V_{CC} = MAX, V_I = 5.5 V				1			1	mA
I_{IH}	High-level input current	S input	V_{CC} = MAX, V_I = 2.7 V				100			100	μA
		Any other					50			50	
I_{IL}	Low-level input current	S input	V_{CC} = MAX V_I = 0.5 V				−4			−4	mA
		Any other					−2			−2	
I_{OS}	Short-circuit output current§		V_{CC} = MAX		−40		−100	−40		−100	mA
I_{CC}	Supply current	All outputs high	V_{CC} = MAX, See Note 2			44	68		36	56	mA
		All outputs low				60	93		52	81	
		All outputs off				64	99		56	87	

†For conditions shown as MIN or MAX, use the appropriate value specified under recommended operating conditions.
‡All typical values are at V_{CC} = 5 V, T_A = 25°C.
§Not more than one output should be shorted at a time and duration of the short-circuit should not exceed one second.
NOTE 2: I_{CC} is measured with all outputs open and all possible inputs grounded while achieving the stated output conditions.

switching characteristics, V_{CC} = 5 V, T_A = 25°C, R_L = 280 Ω

PARAMETER¶	FROM (INPUT)	TO (OUTPUT)	TEST CONDITIONS	'S257 MIN	'S257 TYP	'S257 MAX	'S258 MIN	'S258 TYP	'S258 MAX	UNIT
t_{PLH}	Data	Any	C_L = 15 pF, See Note 3		5	7.5		4	6	ns
t_{PHL}					4.5	6.5		4	6	
t_{PLH}	Select	Any			8.5	15		8	12	ns
t_{PHL}					8.5	15		7.5	12	
t_{PZH}	Output Control	Any			13	19.5		13	19.5	ns
t_{PZL}					14	21		14	21	
t_{PHZ}	Output Control	Any	C_L = 5 pF, See Note 3		5.5	8.5		5.5	8.5	ns
t_{PLZ}					9	14		9	14	

¶f_{max} = Maximum clock frequency
t_{PLH} = propagation delay time, low-to-high-level output
t_{PHL} = propagation delay time, high-to-low-level output
t_{PZH} = output enable time to high level
t_{PZL} = output enable time to low level
t_{PHZ} = output disable time from high level
t_{PLZ} = output disable time from low level

NOTE 3: Load circuits and voltage waveforms are shown in Section 1.

DECEMBER 1983 – REVISED M/ 1988

- 8-Bit Parallel-Out Storage Register Performs Serial-to-Parallel Conversion with Storage
- Asynchronous Parallel Clear
- Active High Decoder
- Enable/Disable Input Simplified Expansion
- Expandable for N-Bit Applications
- Four District Functional Modes
- Package Options Include Ceramic Chip Carriers and Flat Packages in Addition to Plastic and Ceramic DIPs
- Dependable Texas Instruments Quality and Reliability

SN54259, SN54LS259B . . . J OR W PACKAGE
SN74259 . . . N PACKAGE
SN74LS259B . . . D OR N PACKAGE
(TOP VIEW)

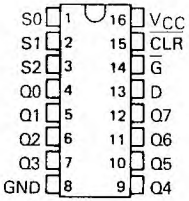

SN54LS259B . . . FK PACKAGE
(TOP VIEW)

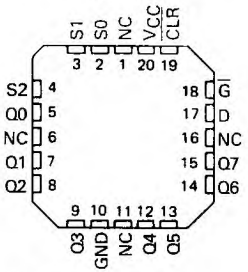

NC - No internal connection

description

These 8-bit addressable latches are designed for general purpose storage applications in digital systems. Specific uses include working registers, serial-holding registers, and active-high decoders or demultiplexers. They are multifunctional devices capable of storing single-line data in eight addressable latches, and being a 1-of-8 decoder or demultiplexer with active-high outputs.

Four distinct modes of operation are selectable by controlling the clear ($\overline{CLR}$) and enable ($\overline{G}$) inputs as enumerated in the function table. In the addressable-latch mode, data at the data-in terminal is written into the addressed latch. The addressed latch will follow the data input with all unaddressed latches remaining in their previous states. In the memory mode, all latches remain in their previous states and are unaffected by the data or address inputs. To eliminate the possiblity of entering erroneous data in the latches, enable $\overline{G}$ should be held high (inactive) while the address lines are changing. In the 1-of-8 decoding or demultiplexing mode, the addressed output will follow the level of the D input with all other outputs low. In the clear mode, all outputs are low and unaffected by the address and data inputs.

The SN54259 and SN54LS259B are characterized for operation over the full military temperature range of −55°C to 125°C. The SN74259 and SN74LS259B are characterized for operation from 0°C to 70°C.

logic symbol†

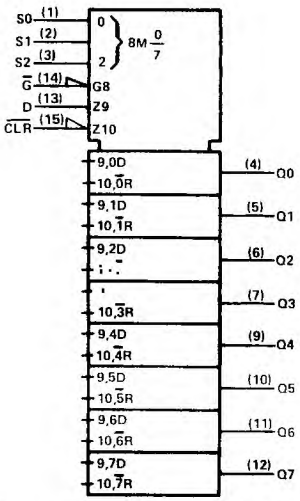

†This symbol is in accordance with ANSI/IEEE Std. 91-1984 and IEC Publication 617-12.
Pin numbers shown are for D, J, N, and W packages.

PRODUCTION DATA documents contain information current as of publication date. Products conform to specifications per the terms of Texas Instruments standard warranty. Production processing does not necessarily include testing of all parameters.

FUNCTION TABLE

INPUTS $\overline{CLR}$	INPUTS $\overline{G}$	OUTPUT OF ADDRESSED LATCH	EACH OTHER OUTPUT	FUNCTION
H	L	D	Q_{i0}	Addressable Latch
H	H	Q_{i0}	Q_{i0}	Memory
L	L	D	L	8-Line Demultiplexer
L	H	L	L	Clear

H = high level, L = low level
D = the level at the data input
Q_{i0} = the level of Q_i (i = 0, 1, . . . 7, as appropriate) before the indicated steady-state input conditions were established.

LATCH SELECTION TABLE

SELECT INPUTS S2	S1	S0	LATCH ADDRESSED
L	L	L	0
L	L	H	1
L	H	L	2
L	H	H	3
H	L	L	4
H	L	H	5
H	H	L	6
H	H	H	7

schematic of inputs and outputs

'259

EQUIVALENT OF EACH INPUT

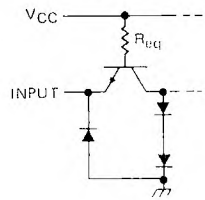

$\overline{G}$: R_{eq} = 2.2 kΩ NOM
All other inputs. R_{eq} = 4 kΩ NOM

'259

TYPICAL OF ALL OUTPUTS

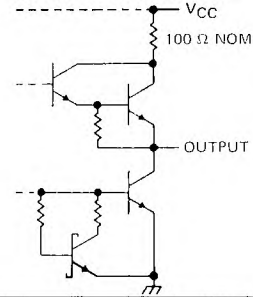

'LS259B

EQUIVALENT OF $\overline{G}$ INPUT

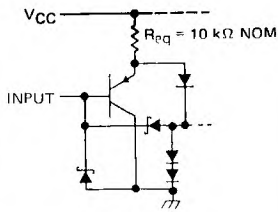

'LS259B

EQUIVALENT OF ALL OTHER INPUTS

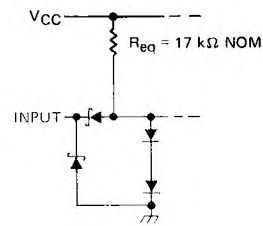

'LS259B

TYPICAL OF ALL OUTPUTS

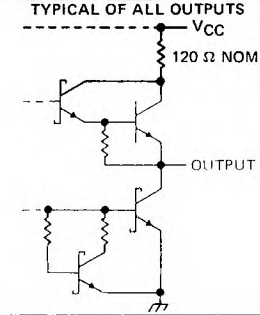

absolute maximum ratings over operating free-air temperature range (unless otherwise noted)

Supply voltage (see Note 1) . . . . . 7 V
Input voltage: SN54259, SN74259 . . . . . 5.5 V
SN54LS259B, SN74LS259B . . . . . 7 V
Operating free-air temperature range: SN54259, SN54LS259B . . . . . −55°C to 125°C
SN74259, SN74LS259B . . . . . 0°C to 70°C
Storage temperature range . . . . . −65°C to 150°C

NOTE 1: Voltage values are with respect to network ground terminal.

TEXAS INSTRUMENTS
POST OFFICE BOX 655012 • DALLAS, TEXAS 75265

recommended operating conditions

		SN54259			SN74259			UNIT
		MIN	NOM	MAX	MIN	NOM	MAX	
Supply voltage, V_{CC}		4.5	5	5.5	4.75	5	5.25	V
High-level output current, I_{OH}				−800			−800	μA
Low-level output current, I_{OL}				16			16	mA
Width of clear or enable pulse, t_w		15			15			ns
Setup time, t_{su}	Data	15↑			15↑			ns
	Address	5↑			5↑			
Hold time, t_h	Data	0↑			0↑			ns
	Address	20↑			20↑			
Operating free-air temperature, T_A		−55		125	0		70	°C

†The arrow indicates that the rising edge of the enable pulse is used for reference.

electrical characteristics over recommended operating free-air temperature range (unless otherwise noted)

PARAMETER			TEST CONDITIONS†		SN54259			SN74259			UNIT
					MIN	TYP‡	MAX	MIN	TYP‡	MAX	
V_{IH}	High-level input voltage				2			2			V
V_{IL}	Low-level input voltage						0.8			0.8	V
V_{IK}	Input clamp voltage		V_{CC} = MIN,	I_I = 12 mA			−1.5			−1.5	V
V_{OH}	High-level output voltage		V_{CC} = MIN, V_{IL} = 0.8 V,	V_{IH} = 2 V, I_{OH} = −800 μA	2.4	3.4		2.4	3.4		V
V_{OL}	Low-level output voltage		V_{CC} = MIN, V_{IL} = 0.8 V,	V_{IH} = 2 V, I_{OL} = 16 mA		0.2	0.4		0.2	0.4	V
I_I	Input current at maximum input voltage		V_{CC} = MAX,	V_I = 5.5 V			1			1	mA
I_{IH}	High-level input current	$\overline{G}$	V_{CC} = MAX,	V_I = 2.4 V			80			80	μA
		Other inputs					40			40	
I_{IL}	Low-level input current	$\overline{G}$	V_{CC} = MAX,	V_I = 0.4 V			−3.2			−3.2	mA
		Other inputs					−1.6			−1.6	
I_{OS}	Short-circuit output current§		V_{CC} = MAX		−18		−57	−18		−57	mA
I_{CC}	Supply current		V_{CC} = MAX,	See Note 2		60	90		60	90	mA

†For conditions shown as MIN or MAX, use the appropriate value specified under recommended operating conditions.
‡All typical values are at V_{CC} = 5 V, T_A = 25°C.
§Not more than one output should be shorted at a time.
NOTE 2: I_{CC} is measured with the inputs grounded and the outputs open.

switching characteristics, V_{CC} = 5 V, T_A = 25°C

PARAMETER	FROM (INPUT)	TO (OUTPUT)	TEST CONDITIONS	MIN	TYP	MAX	UNIT
t_{PHL}	$\overline{CLR}$	Any Q	C_L = 15 pF, R_L = 400 Ω, See Note 3		16	25	ns
t_{PLH}	Data	Any Q			14	24	ns
t_{PHL}					11	20	
t_{PLH}	Address	Any Q			15	28	ns
t_{PHL}					17	28	
t_{PLH}	$\overline{G}$	Any Q			12	20	ns
t_{PHL}					11	20	

t_{PLH} = propagation delay time, low-to-high-level output
t_{PHL} = propagation delay time, high-to-low-level output
NOTE 3: Load circuits and voltage waveforms are shown in Section 1.

recommended operating conditions

			SN54LS259B			SN74LS259B			UNIT
			MIN	NOM	MAX	MIN	NOM	MAX	
V_{CC}	Supply voltage		4.5	5	5.5	4.75	5	5.25	V
V_{IH}	High-level input voltage		2			2			V
V_{IL}	Low-level input voltage				0.7			0.8	V
I_{OH}	High-level output current				−0.4			−0.4	mA
I_{OL}	Low-level output current				4			8	mA
t_w	Pulse duration	$\overline{G}$ low	17			17			ns
		$\overline{CLR}$ low	10			10			
t_{su}	Set up time	Data before $\overline{G}\uparrow$	20			20			ns
		Address before $\overline{G}\uparrow$	17			17			
		Address before $\overline{G}\downarrow$	0			0			
t_h	Hold time	Data after $\overline{G}\uparrow$	0			0			ns
		Address after $\overline{G}\uparrow$	0			0			
T_A	Operating free-air temperature		−55		125	0		70	°C

electrical characteristics over recommended operating free-air temperature range (unless otherwise noted)

PARAMETER	TEST CONDITIONS†		SN54LS259B			SN74LS259B			UNIT
			MIN	TYP‡	MAX	MIN	TYP	MAX	
V_{IK}	V_{CC} = MIN, I_I = −18 mA				−1.5			−1.5	V
V_{OH}	V_{CC} = MIN, V_{IH} = 2 V, V_{IL} = MAX, I_{OH} = −0.4 mA		2.5	3.4		2.7	3.4		V
V_{OL}	V_{CC} = MIN, V_{IH} = 2 V, V_{IL} = MAX	I_{OL} = 4 mA		0.25	0.4		0.25	0.4	V
		I_{OL} = 8 mA					0.35	0.5	
I_I	V_{CC} = MAX, V_I = 7 V				0.1			0.1	mA
I_{IH}	V_{CC} = MAX, V_I = 2.7 V				20			20	μA
I_{IL}	V_{CC} = MAX, V_I = 0.4 V				−0.4			−0.4	mA
I_{OS}§	V_{CC} = MAX		−20		−100	−20		−100	mA
I_{CC}	V_{CC} = MAX, See Note 2			27	36		22	36	mA

†For conditions shown as MIN or MAX, use the appropriate value specified under recommended operating conditions
‡All typical values are at V_{CC} = 5 V, T_A = 25°C.
§Not more than one output should be shorted at a time, and duration short-circuit should not exceed one second.
NOTE 2: I_{CC} is measured with the inputs grounded and the outputs open.

switching characteristics, V_{CC} = 5 V, T_A = 25°C

PARAMETER	FROM (INPUT)	TO (OUTPUT)	TEST CONDITIONS	MIN	TYP	MAX	UNIT
t_{PHL}	$\overline{CLR}$	Any Q	C_L = 15 pF, R_L = 2 kΩ, See Note 3		12	18	ns
t_{PLH}	Data	Any Q			19	30	ns
t_{PHL}					13	20	
t_{PLH}	Address	Any Q			17	27	ns
t_{PHL}					14	20	
t_{PLH}	$\overline{G}$	Any Q			15	24	ns
t_{PHL}					15	24	

t_{PLH} = propagation delay time, low-to-high-level output
t_{PHL} = propagation delay time, high-to-low-level output
NOTE 3: Load circuits and voltage waveforms are shown in Section 1.

TEXAS INSTRUMENTS
POST OFFICE BOX 655012 • DALLAS, TEXAS 75265

DECEMBER 1983 – REVISED MARCH 1988

- **Package Options Include Ceramic Chip Carriers and Flat Packages in Addition to Plastic and Ceramic DIPs**
- **Dependable Texas Instruments Quality and Reliability**

description

These devices contain two independent 5-input positive-NOR gates. They perform the Boolean function $Y = \overline{A+B+C+D+E}$ in positive logic.

The SN54S260 is characterized for operation over the full military temperature range of −55°C to 125°C. The SN74S260 is characterized for operation from 0°C to 70°C.

logic diagram (each gate)

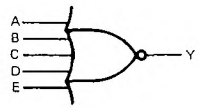

logic symbol†

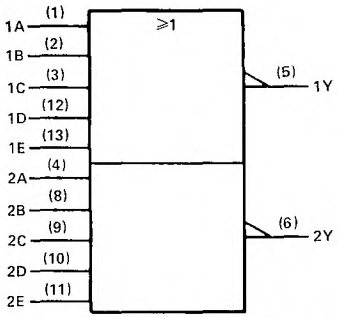

†This symbol is in accordance with ANSI/IEEE Std. 91-1984 and IEC Publication 617-12.

Pin numbers shown are for D, J, N, and W packages.

SN548260 . . . J OR W PACKAGE
SN74S260 . . . D OR N PACKAGE
(TOP VIEW)

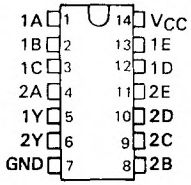

SN54S260 . . . FK PACKAGE
(TOP VIEW)

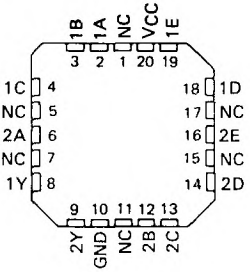

NC – No internal connection

PRODUCTION DATA documents contain information current as of publication date. Products conform to specifications per the terms of Texas Instruments standard warranty. Production processing does not necessarily include testing of all parameters.

schematic (each gate)

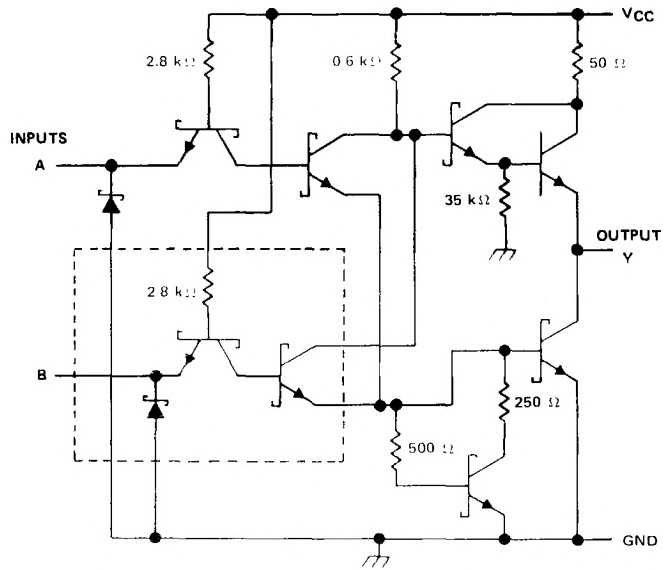

Resistor values shown are nominal.
The portion of the schematic within the dashed-line is repeated for each additional input.

absolute maximum ratings over operating free-air temperature range (unless otherwise noted)

Supply voltage, V_{CC} (see Note 1)		7 V
Input voltage		5.5 V
Operating free-air temperature range:	SN54'	−55°C to 125°C
	SN74'	0°C to 70°C
Storage temperature range		−65°C to 150°C

NOTE 1: Voltage values are with respect to network ground terminal.

TEXAS INSTRUMENTS
POST OFFICE BOX 655012 • DALLAS, TEXAS 75265

recommended operating conditions

		SN54S260			SN74S260			UNIT
		MIN	TYP	MAX	MIN	TYP	MAX	
V_{CC}	Supply voltage	4.5	5	5.5	4.75	5	5.25	V
V_{IH}	High-level input voltage	2			2			V
V_{IL}	Low-level input voltage			0.8			0.8	V
I_{OH}	High-level output current			−1			−1	mA
I_{OL}	Low-level output current			20			20	mA
T_A	Operating free-air temperature	−55		125	0		70	°C

electrical characteristics over recommended operating free-air temperature range (unless otherwise noted)

PARAMETER	TEST CONDITIONS †			SN54S260			SN74S260			UNIT
				MIN	TYP‡	MAX	MIN	TYP‡	MAX	
V_{IK}	V_{CC} = MIN	I_I = −18 mA				−1.2			−1.2	V
V_{OH}	V_{CC} = MIN,	V_{IL} = 0.8 V,	I_{OH} = −1 mA	2.5	3.4		2.7	3.4		V
V_{OL}	V_{CC} = MIN,	V_{IH} = 2 V,	I_{OL} = 20 mA			0.5			0.5	V
I_I	V_{CC} = MAX,	V_I = 5.5 V				1			1	mA
I_{IH}	V_{CC} = MAX,	V_{IH} = 2.7 V				50			50	μA
I_{IL}	V_{CC} = MAX,	V_{IL} = 0.5 V				−2			−2	mA
I_{OS}§	V_{CC} = MAX			−40		−100	−40		−100	mA
I_{CCH}	V_{CC} = MAX,	V_I = 0 V			17	29		17	29	mA
I_{CCL}	V_{CC} = MAX,	See Note 2			26	45		26	45	mA

† For conditions shown as MIN or MAX, use the appropriate value specified under recommended operating conditions.
‡ All typical values are at V_{CC} = 5 V, T_A = 25°C.
§ Not more than one output should be shorted at a time, and the duration of the short-circuit should not exceed one second.
NOTE 2: One input at 4.5 V, all others at GND.

switching characteristics, V_{CC} = 5 V, T_A = 25°C (see note 3)

PARAMETER	FROM (INPUT)	TO (OUTPUT)	TEST CONDITIONS		MIN	TYP	MAX	UNIT
t_{PLH}	Any	Y	R_L = 280 Ω,	C_L = 15 pF		4	5.5	ns
t_{PHL}						4	6	ns

NOTE 3: See General Information Section for load circuits and voltage waveforms.

MARCH 1974 – REVISED MARCH 1988

- Fast Multiplication . . . 5-Bit Product in 26 ns Typ
- Power Dissipation . . . 110 mW Typical
- Latch Outputs for Synchronous Operation
- Expandable for m-Bit-by-n-Bit Applications
- Fully Compatible with Most TTL and Other Saturated Low-Level Logic Families
- Diode-Clamped Inputs Simplify System Design

SN54LS261 . . . J OR W PACKAGE
SN74LS261 . . . D OR N PACKAGE
(TOP VIEW)

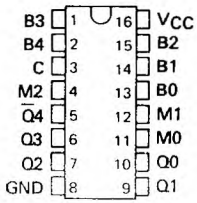

SN54LS261 . . . FK PACKAGE
(TOP VIEW)

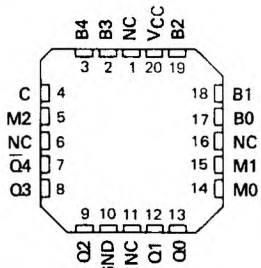

NC – No internal connection

description

These low-power Schottky circuits are designed to be used in parallel multiplication applications. They perform binary multiplication in two's-complement form, two bits at a time.

The M inputs are for the multiplier bits and the B inputs are for the multiplicand. The Q outputs represent the partial product as a recoded base-4 number. This recoding effectively reduces the Wallace-tree hardware requirements by a factor of two.

The outputs represent partial products in one's-complement form generated as a result of multiplication. A simple rounding scheme using two additional gates is needed for each partial product to generate two's complement.

The leading (most-significant) bit of the product is inverted for ease in extending the sign to square (left justify) the partial-product bits.

The SN54LS261 is characterized for operation over the full military temperature range of −55°C to 125°C; the SN74LS261 for operation from 0°C to 70°C.

logic symbol†

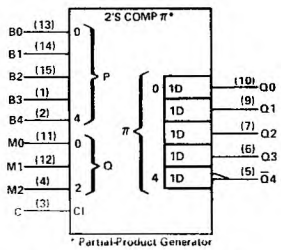

†This symbol is in accordance with ANSI/IEEE Std. 91-1984 and IEC Publication 617-12.

Pin numbers shown are for D, J, N, and W packages

FUNCTION TABLE

INPUTS				OUTPUTS				
LATCH CONTROL C	MULTIPLIER M2	MULTIPLIER M1	MULTIPLIER M0	$\overline{Q4}$	Q3	Q2	Q1	Q0
L	X	X	X	$\overline{Q4}_0$	$Q3_0$	$Q2_0$	$Q1_0$	$Q0_0$
H	L	L	L	H	L	L	L	L
H	L	L	H	$\overline{B4}$	B4	B3	B2	B1
H	L	H	L	$\overline{B4}$	B4	B3	B2	B1
H	L	H	H	$\overline{B4}$	B3	B2	B1	B0
H	H	L	L	B4	$\overline{B3}$	$\overline{B2}$	$\overline{B1}$	$\overline{B0}$
H	H	L	H	B4	$\overline{B4}$	$\overline{B3}$	$\overline{B2}$	$\overline{B1}$
H	H	H	L	B4	$\overline{B4}$	$\overline{B3}$	$\overline{B2}$	$\overline{B1}$
H	H	H	H	H	L	L	L	L

H = high level, L = low level, X = irrelevant
$\overline{Q4}_0$ . . . $Q0_0$ = The logic level of the same output before the high-to-low transition of C.
B4 . . . B0 = The logic level of the indicated multiplicand (B) input.

PRODUCTION DATA documents contain information current as of publication date. Products conform to specifications per the terms of Texas Instruments standard warranty. Production processing does not necessarily include testing of all parameters.

schematics of inputs and outputs

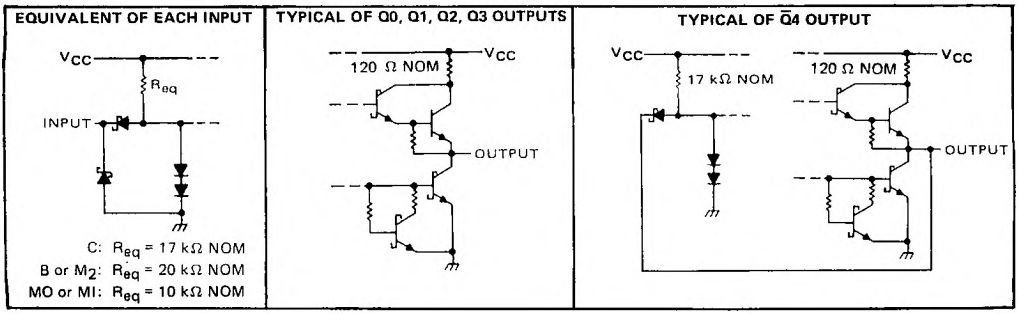

logic diagram (positive logic)

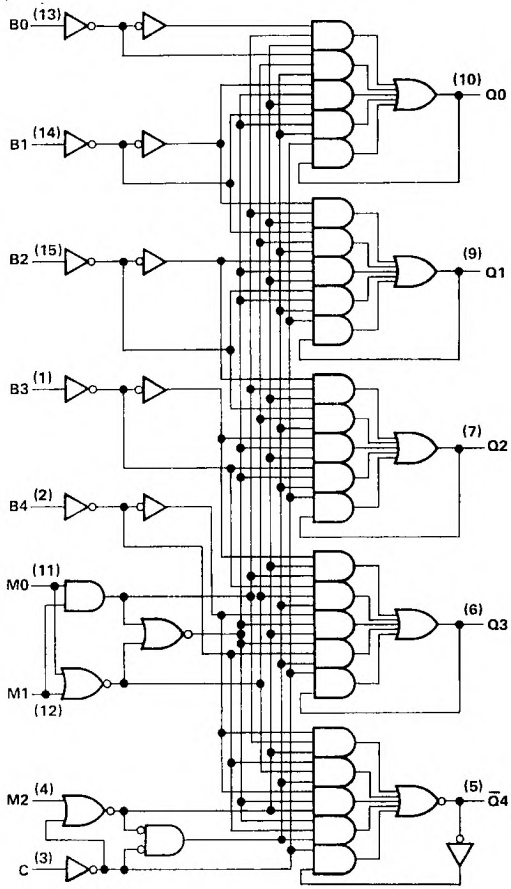

Pin numbers shown are for D, J, N, and W packages.

TEXAS INSTRUMENTS
POST OFFICE BOX 655012 • DALLAS, TEXAS 75265

absolute maximum ratings over operating free-air temperature range (unless otherwise noted)

Supply voltage, V_{CC} (see Note 1) . . . . . 7 V
Input voltage . . . . . 7 V
Operating free-air temperature range: SN54LS261 . . . . . −55°C to 125°C
SN74LS261 . . . . . 0°C to 70°C
Storage temperature range . . . . . −65°C to 150°C

NOTE 1: Voltage values are with respect to network ground terminal.

recommended operating conditions

		SN54LS261			SN74LS261			UNIT
		MIN	NOM	MAX	MIN	NOM	MAX	
Supply voltage, V_{CC}		4.5	5	5.5	4.75	5	5.25	V
High-level output current, I_{OH}				−400			−400	μA
Low-level output current, I_{OL}				4			8	mA
Width of enable pulse, t_w		25			25			ns
Setup time, t_{su}	Any M input	17↓			17↓			ns
	Any B input	15↓			15↓			
Hold time, t_h	Any M input	0↓			0↓			ns
	Any B input	0↓			0↓			
Operating free-air temperature, T_A		−55		125	0		70	°C

↓The arrow indicates that the falling edge of the enable pulse is used for reference.

electrical characteristics over recommended operating free-air temperature range (unless otherwise noted)

PARAMETER		TEST CONDITIONS†			SN54LS261			SN74LS261			UNIT
					MIN	TYP‡	MAX	MIN	TYP‡	MAX	
V_{IH}	High-level input voltage				2			2			V
V_{IL}	Low-level input voltage						0.7			0.8	V
V_{IK}	Input clamp voltage	V_{CC} = MIN,	I_I = −18 mA				−1.5			−1.5	V
V_{OH}	High-level output voltage	V_{CC} = MIN, V_{IL} = V_{IL} max,	V_{IH} = 2 V, I_{OH} = −400 μA		2.5	3.4		2.7	3.4		V
V_{OL}	Low-level output voltage	V_{CC} = MIN, V_{IH} = 2 V, V_{IL} = V_{IL} max		I_{OL} = 4 mA		0.25	0.4		0.25	0.4	V
				I_{OL} = 8 mA					0.35	0.5	
I_I	Input current at maximum input voltage	V_{CC} = MAX,	V_I = 7 V	MO or MI			0.2			0.2	mA
				All others			0.1			0.1	
I_{IH}	High-level input current	V_{CC} = MAX,	V_I = 2.7 V	MO or MI			40			40	μA
				All others			20			20	
I_{IL}	Low-level input current	V_{CC} = MAX,	V_I = 0.4 V	MO or MI			−0.8			−0.8	mA
				All others			−0.4			−0.4	
I_{OS}	Short-circuit output current§	V_{CC} = MAX			−20		−100	−20		−100	mA
I_{CC}	Supply current	V_{CC} = MAX, Outputs open	All inputs at 0 V,			20	38		20	40	mA

†For conditioning shown as MIN or MAX, use the appropriate value specified under recommended operating conditions.
‡All typical values are at V_{CC} = 5 V, T_A = 25°C.
§Not more than one output should be shorted at a time and duration of the output short-circuit should not exceed one second.

switching characteristics, V_{CC} = 5 V, T_A = 25°C

PARAMETER¶	FROM (INPUT)	TO (OUTPUT)	TEST CONDITIONS	MIN	TYP	MAX	UNIT
t_{PLH}	C	Any Q	C_L = 15 pF, R_L = 2 kΩ, See Note 2		22	35	ns
t_{PHL}					20	30	ns
t_{PLH}	Any M input	Any Q			25	40	ns
t_{PHL}					22	35	ns
t_{PLH}	Any B input	Any Q			27	42	ns
t_{PHL}					24	37	ns

¶t_{PLH} = propagation delay time, low-to-high-level output; t_{PHL} = propagation delay time, high-to-low-level output
NOTE 2: Load circuits and voltage waveforms are shown in Section 1.

TYPICAL APPLICATION DATA

Multiplication of the numbers 26 (multiplicand) by 29 (multiplier) in decimal, binary, and 2-bit-at-a-time-binary is shown here:

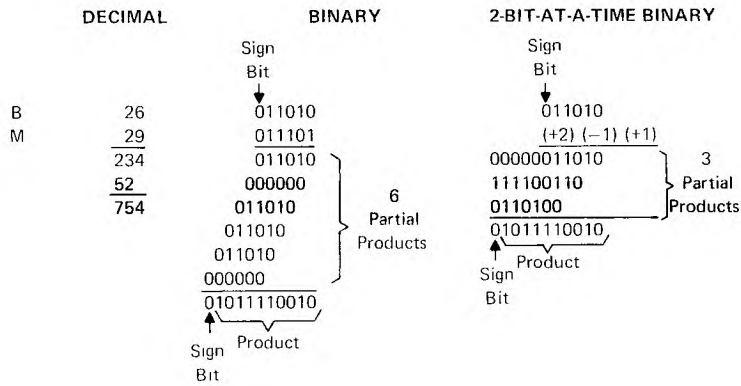

Two points should be noted in the two-bit-at-a-time-binary example above. First, in positioning the partial products beneath each other for final addition, each partial product is shifted two places to the left of the partial products above it instead of one place as is done in regular multiplication. Second, the msb of the partial product (the sign bit) is extended to the sign-bit column of the final answer.

A substantial reduction of multiplication time, cost, and power is obtained by implementing a parallel partial-product-generation scheme using a 2-bit-at-a-time algorithm, followed by a Wallace Tree summation.

Partial-product-generation rules of the algorithm are:

1. Examine two bits of multiplier M plus the next lower bit. For the first partial product (PP1) the next lower bit is zero.

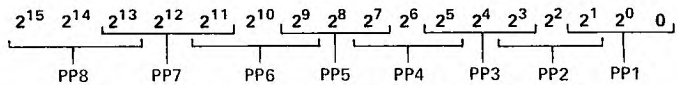

TEXAS INSTRUMENTS
POST OFFICE BOX 655012 • DALLAS, TEXAS 75265

TYPICAL APPLICATION DATA

2. Generate partial product (PPi) as shown in the following table:

MULTIPLIER BITS FROM STEP 1			OPERATOR SYMBOL	TO OBTAIN PARTIAL PRODUCT
2^{2i-1}	2^{2i-2}	2^{2i-3}		
0	0	0	0	Replace multiplicand by zero
0	0	1	+1 B	Copy multiplicand
0	1	0	+1 B	Copy multiplicand
0	1	1	+2 B	Shift multiplicand left one bit
1	0	0	−2 B	Shift two's complement of multiplicand left one bit
1	0	1	−1 B	Replace multiplicand by two's complement
1	1	0	−1 B	Replace multiplicand by two's complement
1	1	1	0	Replace multiplicand by zero

3. Weight the partial products by indexing each two places left relative to the next-less-significant product.

4. Extend the most-significant bit of the partial product to the sign-bit place value of the final product.

EXAMPLE OF ALGORITHM

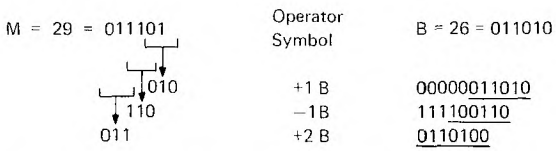

The summation of these partial products was shown in the 2-bit-at-a-time binary multiplication example above.

The 'LS261 generates partial products according to this algorithm with two exceptions:

1. The one's complement is generated for the cases requiring the two's complement. The two's complement can be obtained by adding one to the one's complement; this rounding can be done by using one NAND gate and one AND gate as shown in Figure B.

2. The most-significant bit is complemented to reduce the hardware required to extend the sign bit. This extension can be accomplished by adding a hard-wired logic 1 in bit position 2^{2i+15} of each partial product and also in bit position 2^{16} of the first partial product (PP1).

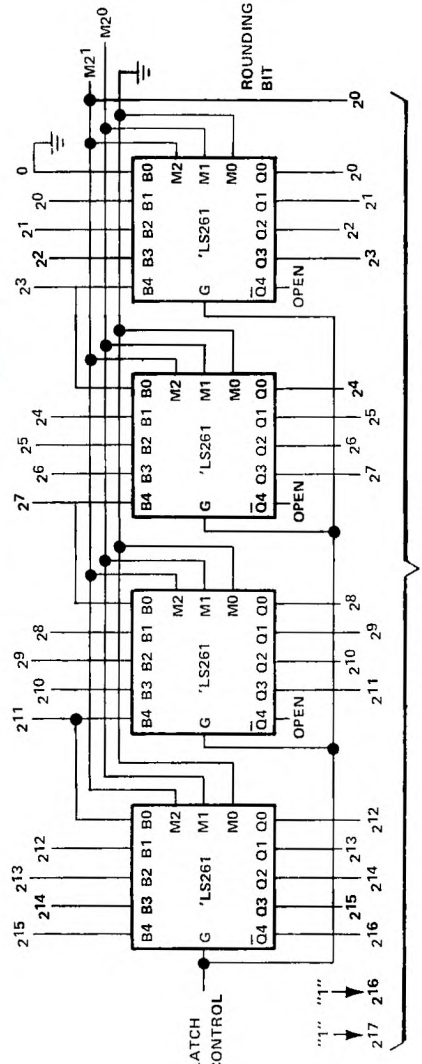

FIGURE A – FIRST PARTIAL PRODUCT, PP1

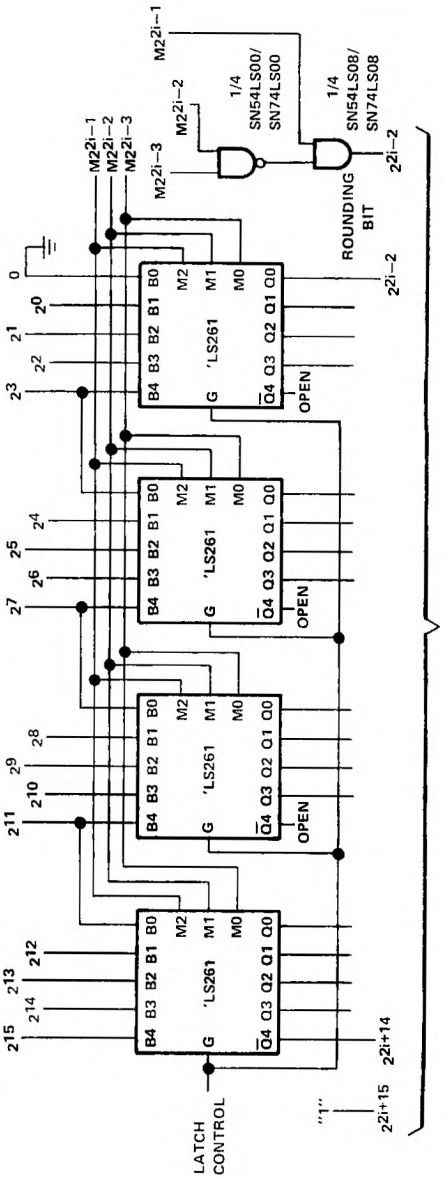

FIGURE B – OTHER PARTIAL PRODUCTS, PPi

TEXAS INSTRUMENTS
POST OFFICE BOX 655012 • DALLAS, TEXAS 75265

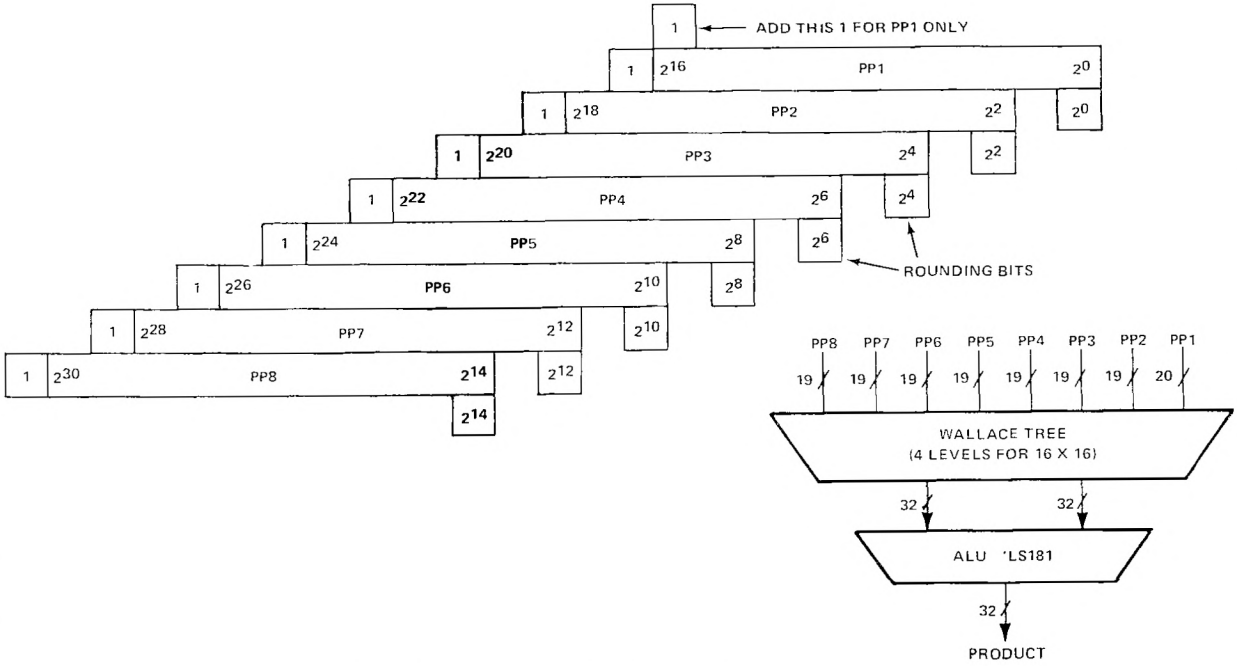

FIGURE C–MANIPULATION OF PARTIAL PRODUCTS FOR ENTRY INTO WALLACE TREE

In general, the 4 x 2 bit 'LS261 can be expanded for use in 4m x 2n bit multipliers. Partial-product generation uses m x n 'LS261s, m x n ÷ 16 'LS00s, and m x n ÷ 16 'LS08s. The size of the Wallace tree and ALU requirements vary depending on the size of the problem. The count for the 16 x 16 bit multiplier is:

32	SN54LS261/SN74LS261
2	SN54LS00/SN74LS00
2	SN54LS08/SN74LS08
56	SN54LS183/SN74LS183
7	SN54LS181/SN74LS181
2	SN54S182/SN74S182

DECEMBER 1983 – REVISED MARCH 1988

FOR SYMMETRICAL GENERATION OF COMPLEMENTARY TTL SIGNALS

- **Switching Time Skew of the Complementary Outputs Is Typically 0.5 ns . . . Not More than 3 ns at Rated Loading**
- **Full Fan-Out to 20 High-Level and 10 Low-Level 54/74 Loads**
- **Active Pull-Down Provides Square Transfer Characteristics**

description

The SN54265 and SN74265 circuits feature complementary outputs from each logic element, which have virtually symmetrical switching time delays from the triggering input. They are designed specifically for use in applications such as:

- Symmetrical clock/$\overline{\text{clock}}$ generators
- Complementary input circuit for decoders and code converters
- Switch debouncing
- Differential line driver

Examples of these four functions are illustrated in the typical application data.

The SN54265 is characterized for operation over the full military temperature range of −55°C to 125°C; the SN74265 is characterized for operation from 0°C to 70°C.

logic symbol†

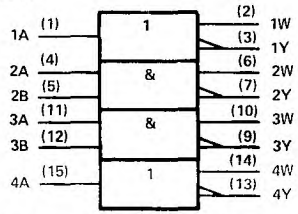

†This symbol is in accordance with ANSI/IEEE Std. 91-1984 and IEC Publication 617-12

logic diagrams

ELEMENTS 1 and 4

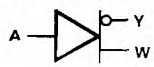

ELEMENTS 2 and 3

positive logic

$Y = \overline{A}$ $W = A$

$Y = \overline{AB}$ or $Y = \overline{A} + \overline{B}$
$W = AB$ or $W = \overline{\overline{A} + \overline{B}}$

SN54265 . . . J OR W PACKAGE
SN74265 . . . N PACKAGE
(TOP VIEW)

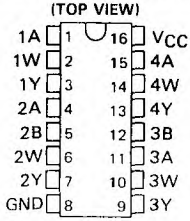

NC - No internal connection

schematics of inputs and outputs

EQUIVALENT OF EACH INPUT

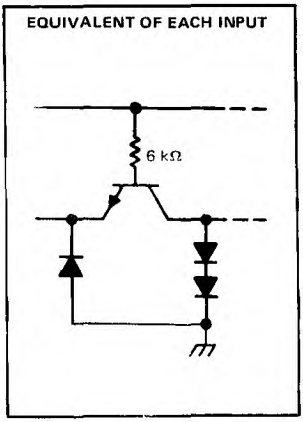

TYPICAL OF ALL OUTPUTS

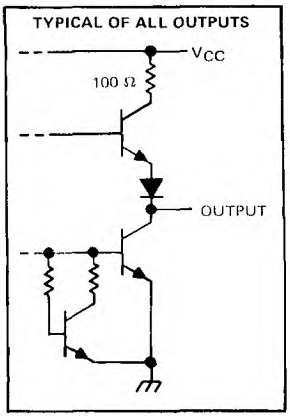

PRODUCTION DATA documents contain information current as of publication date. Products conform to specifications per the terms of Texas Instruments standard warranty. Production processing does not necessarily include testing of all parameters.

absolute maximum ratings over operating free-air temperature range (unless otherwise noted)

Supply voltage, V_{CC} (see Note 1) ..... 7 V
Input voltage ..... 5.5 V
Operating free-air temperature range: SN54265 ..... −55°C to 125°C
SN74265 ..... 0°C to 70°C
Storage temperature range ..... −65°C to 150°C

NOTE 1. Voltage values are with respect to network ground terminal.

recommended operating conditions

	SN54265			SN74265			UNIT
	MIN		MAX	MIN		MAX	
Supply voltage, V_{CC}	4.5	5	5.5	4.75	5	5.25	V
High-level output current, I_{OH}			−800			−800	μA
Low-level output current, I_{OL}			16			16	mA
Operating free-air temperature, T_A	−55		125	0		70	°C

2

TTL Devices

electrical characteristics over recommended operating free-air temperature range (unless otherwise noted)

PARAMETER		TEST CONDITIONS†		MIN	TYP‡	MAX	UNIT
V_{IH}	High-level input voltage			2			V
V_{IL}	Low-level input voltage					0.8	V
V_{IK}	Input clamp voltage	V_{CC} = MIN,	I_I = −12 mA			−1.5	V
V_{OH}	High-level output voltage	V_{CC} = MIN,	I_{OH} = −800 μA	2.4	3.4		V
V_{OL}	Low-level output voltage	V_{CC} = MIN,	I_{OL} = 16 mA		0.2	0.4	V
I_I	Input current at maximum input voltage	V_{CC} = MAX,	V_I = 5.5 V			1	mA
I_{IH}	High-level input current	V_{CC} = MAX,	V_I = 2.4 V			40	μA
I_{IL}	Low-level input current	V_{CC} = MAX,	V_I = 0.4 V			−1.6	mA
I_{OS}	Short-circuit output current§	V_{CC} = MAX,		−20		−57	mA
				−18		−57	
I_{CC}	Supply current	V_{CC} = MAX,	See Note 2		25	34	mA

†For conditions shown as MIN or MAX, use the appropriate value specified under recommended operating conditions.
‡All typical values are at V_{CC} = 5 V, T_A = 25°C.
§Not more than one output should be shorted at a time.
NOTE 2: I_{CC} is measured with all outputs open and all inputs grounded.

switching characteristics, V_{CC} = 5 V, T_A = 25°C

PARAMETER¶	FROM (INPUT)	TO (OUTPUT)	TEST CONDITIONS	MIN	TYP	MAX	UNIT
$t_{PLH(W)}$	A or B	W	R_L = 400 Ω, C_L = 15 pF, See Note 3		11.6	18	ns
$t_{PHL(Y)}$	(as applicable)	Y			11.3	18	
$t_{PHL(W)}$	A or B	W			9.8	18	ns
$t_{PLH(Y)}$	(as applicable)	Y			10.2	18	
$t_{PLH(W)}-t_{PHL(Y)}$	A or B	W with			+0.3	±3	ns
$t_{PHL(W)}-t_{PLH(Y)}$	(as applicable)	respect to Y			−0.4	±3	

t_{PLH} = propagation delay time, low-to-high-level output
t_{PHL} = propagation delay time, high-to-low-level output
$t_{PXX(W)}-t_{PXX(Y)}$ = Difference in indicated propagation delay times at the W and Y outputs, respectively.
NOTE 3: Load circuits and voltage waveforms are shown in Section 1.

TEXAS INSTRUMENTS
POST OFFICE BOX 655012 • DALLAS, TEXAS 75265

TYPICAL CHARACTERISTICS†

PROPAGATION DELAY TIME DIFFERENCE vs FREE-AIR TEMPERATURE

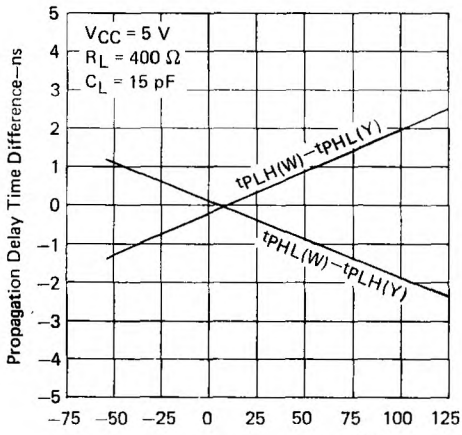

FIGURE 1

PROPAGATION DELAY TIME DIFFERENCE vs SUPPLY VOLTAGE

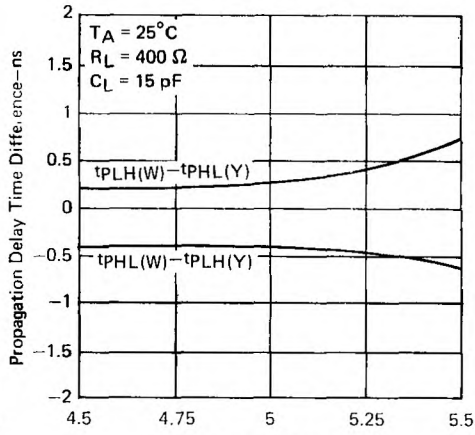

FIGURE 2

PROPAGATION DELAY TIME DIFFERENCE vs LOAD CAPACITANCE

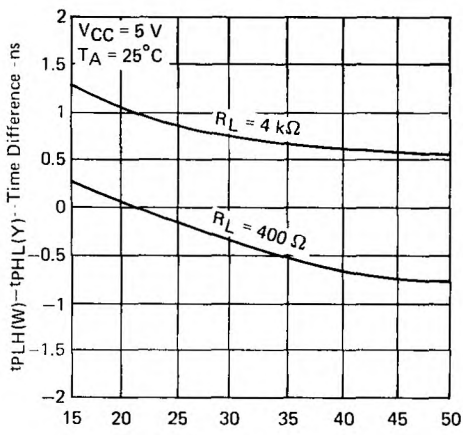

FIGURE 3

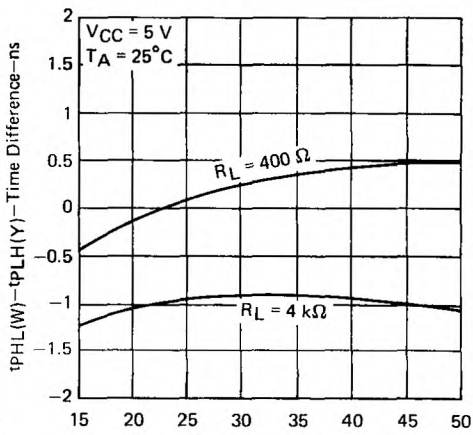

FIGURE 4

† Data for temperatures below 0°C and above 70°C and for supply voltages below 4.75 V and above 5.25 V are applicable for SN54265 only.

TYPICAL APPLICATION DATA

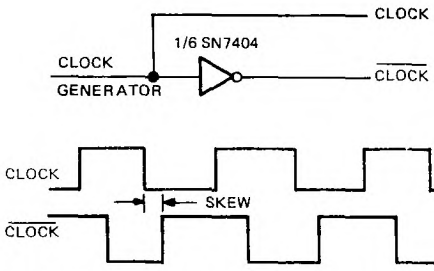

FIGURE A – TYPICAL CLOCK/$\overline{\text{CLOCK}}$ GENERATOR CIRCUIT

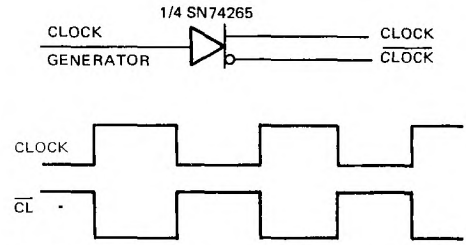

FIGURE B – SKEWLESS CLOCK/$\overline{\text{CLOCK}}$ GENERATOR CIRCUIT

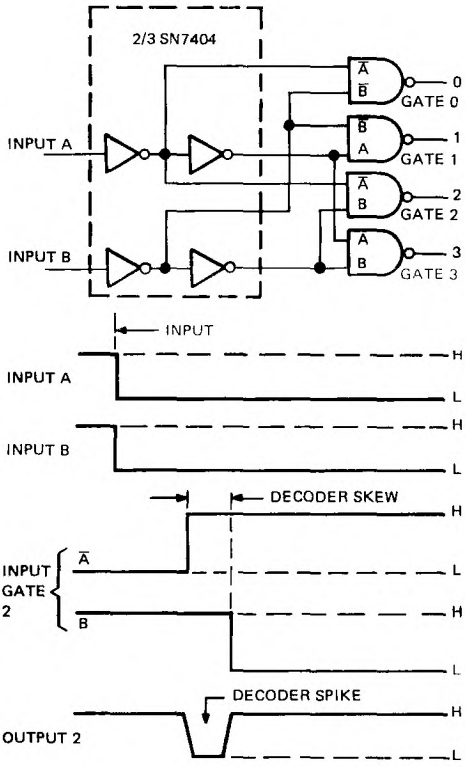

FIGURE C – TYPICAL DECODER/CODE CONVERTER

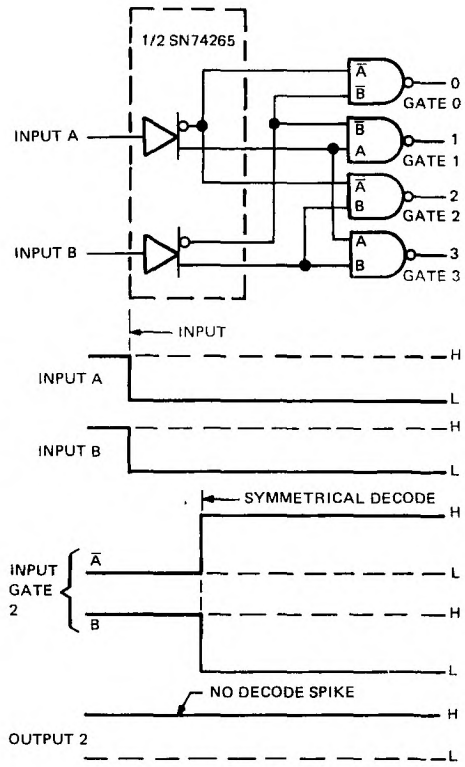

FIGURE D – SYMMETRICAL DECODER/CODE CONVERTER

TEXAS INSTRUMENTS
POST OFFICE BOX 655012 • DALLAS, TEXAS 75265

TYPICAL APPLICATION DATA

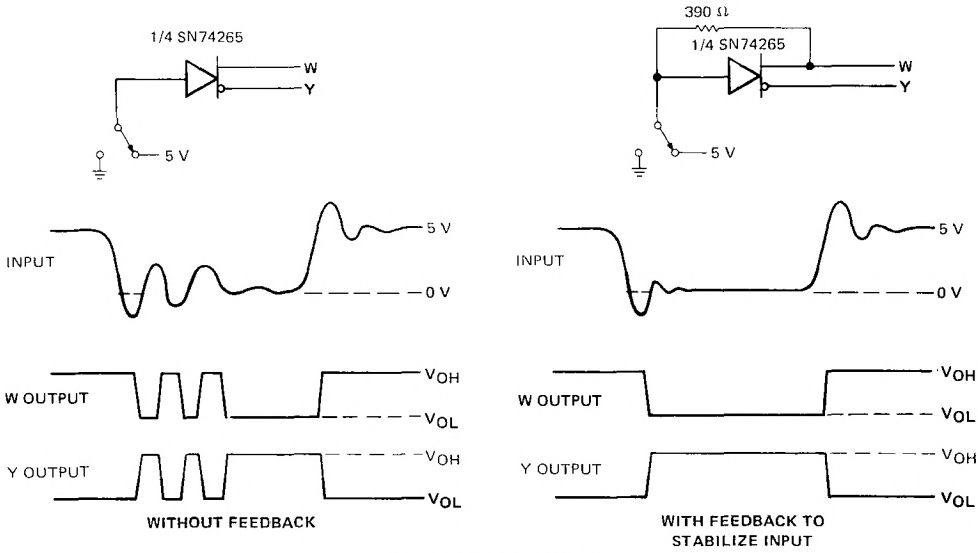

FIGURE E – SWITCH DEBOUNCER

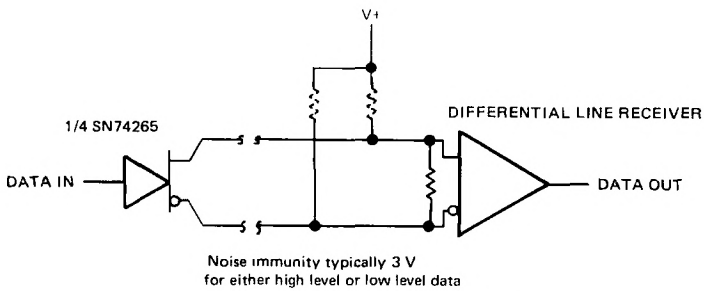

Noise immunity typically 3 V
for either high level or low level data

FIGURE F – DIFFERENTIAL LINE DRIVER

- Can Be Used as a 4-Bit Digital Comparator
- Input Clamping Diodes Simplify System Design
- Fully Compatible with Most TTL Circuits

FUNCTION TABLE

INPUTS		OUTPUT
A	B	Y
L	L	H
L	H	L
H	L	L
H	H	H

H = high level, L = low level

SN54LS266 . . . J OR W PACKAGE
SN74LS266 . . . D OR N PACKAGE
(TOP VIEW)

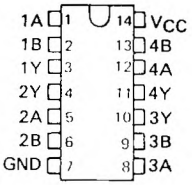

SN54LS266 . . . FK PACKAGE
(TOP VIEW)

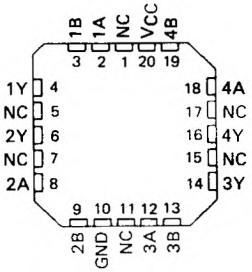

NC – No internal connection

description

The 'LS266 is comprised of four independent 2-input exclusive-NOR gates with open-collector outputs. The open-collector outputs permit tying outputs together for multiple-bit comparisons.

logic symbol (each gate)

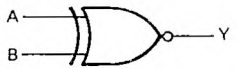

logic symbol†

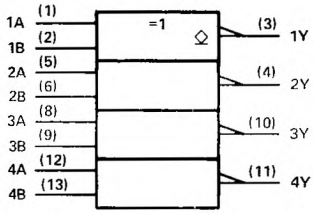

positive logic: $Y = \overline{A \oplus B} = AB + \overline{A}\,\overline{B}$

†This symbol is in accordance with ANSI/IEEE Std. 91-1984 and IEC Publication 617-12.

Pin numbers shown are for D, J, N, and W packages.

schematic of inputs and outputs

EQUIVALENT OF EACH INPUT

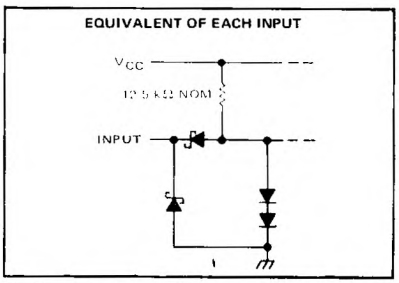

TYPICAL OF ALL OUTPUTS

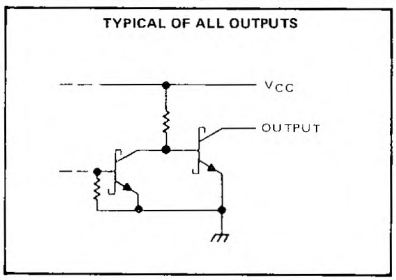

PRODUCTION DATA documents contain information current as of publication date. Products conform to specifications per the terms of Texas Instruments standard warranty. Production processing does not necessarily include testing of all parameters.

absolute maximum ratings over operating free-air temperature range (unless otherwise noted)

Supply voltage, V_{CC} (see Note 1) . . . . . 7 V
Input voltage . . . . . 7 V
Operating free-air temperature range: SN54LS266 . . . . . −55°C to 125°C
SN74LS266 . . . . . 0°C to 70°C
Storage temperature range . . . . . −65°C to 150°C

NOTE 1. Voltage values are with respect to network ground terminal.

recommended operating conditions

	SN54LS266			SN74LS266			UNIT
	MIN	NOM	MAX	MIN	NOM	MAX	
Supply voltage, V_{CC}	4.5	5	5.5	4.75	5	5.25	V
High-level output voltage, V_{OH}			5.5			5.5	V
Low-level output current, I_{OL}			4			8	mA
Operating free-air temperature, T_A	−55		125	0		70	°C

electrical characteristics over recommended operating free-air temperature range (unless otherwise noted)

PARAMETER		TEST CONDITIONS†		SN54LS266			SN74LS266			UNIT
				MIN	TYP‡	MAX	MIN	TYP‡	MAX	
V_{IH}	High-level input voltage			2			2			V
V_{IL}	Low-level input voltage					0.7			0.8	V
V_{IK}	Input clamp voltage	V_{CC} = MIN,	I_I = −18 mA			−1.5			−1.5	V
I_{OH}	High-level output current	V_{CC} = MIN, V_{IL} = V_{IL} max,	V_{IH} = 2 V, V_{OH} = 5.5 V			100			100	μA
V_{OL}	Low-level output voltage	V_{CC} = MIN, V_{IH} = 2 V, V_{IL} = V_{IL} max	I_{OL} = 4 mA		0.25	0.4		0.25	0.4	V
			I_{OL} = 8 mA					0.35	0.5	
I_I	Input current at maximum input voltage	V_{CC} = MAX,	V_I = 7 V			0.2			0.2	mA
I_{IH}	High-level input current	V_{CC} = MAX,	V_I = 2.7 V			40			40	μA
I_{IL}	Low-level input current	V_{CC} = MAX,	V_I = 0.4 V			−0.8			−0.8	mA
I_{CC}	Supply current	V_{CC} = MAX,	See Note 2		8	13		8	13	mA

† For conditions shown as MIN or MAX, use the appropriate value specified under recommended operating conditions for the applicable type.
‡ All typical values are at V_{CC} = 5 V, T_A = 25°C.
NOTE 2: I_{CC} is measured with one input of each gate at 4.5 V, the other inputs grounded, and the outputs open.

switching characteristics, V_{CC} = 5 V, T_A = 25°C

PARAMETER§	FROM (INPUT)	TEST CONDITIONS		MIN	TYP	MAX	UNIT
t_{PLH}	A or B	Other input low	C_L = 15 pF, R_L = 2 kΩ, See Note 3		18	30	ns
t_{PHL}					18	30	
t_{PLH}	A or B	Other input high			18	30	ns
t_{PHL}					18	30	

§ t_{PLH} = propagation delay time, low-to-high-level output
t_{PHL} = propagation delay time, high-to-low-level output
NOTE 3: Load circuits and voltage waveforms are shown in Section 1.

TEXAS INSTRUMENTS
POST OFFICE BOX 655012 • DALLAS, TEXAS 75265

OCTOBER 1976 – REVISED MARCH 1988

- Contains Eight Flip-Flops with Single-Rail Outputs
- Buffered Clock and Direct Clear Inputs
- Individual Data Input to Each Flip-Flop
- Applications Include:
  - Buffer/Storage Registers
  - Shift Registers
  - Pattern Generators

SN54273, SN74LS273 . . . J OR W PACKAGE
SN74273 . . . N PACKAGE
SN74LS273 . . . DW OR N PACKAGE
(TOP VIEW)

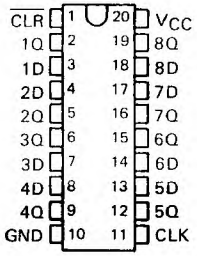

SN54LS273 . . . FK PACKAGE
(TOP VIEW)

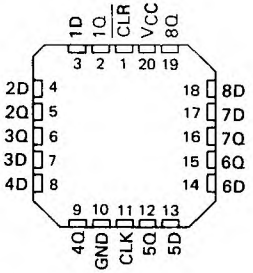

description

These monolithic, positive-edge-triggered flip-flops utilize TTL circuitry to implement D-type flip-flop logic with a direct clear input.

Information at the D inputs meeting the setup time requirements is transferred to the Q outputs on the positive-going edge of the clock pulse. Clock triggering occurs at a particular voltage level and is not directly related to the transition time of the positive-going pulse. When the clock input is at either the high or low level, the D input signal has no effect at the output.

These flip-flops are guaranteed to respond to clock frequencies ranging from 0 to 30 megahertz while maximum clock frequency is typically 40 megahertz. Typical power dissipation is 39 milliwatts per flip-flop for the '273 and 10 milliwatts for the 'LS273.

FUNCTION TABLE
(EACH FLIP-FLOP)

INPUTS			OUTPUT
CLEAR	CLOCK	D	Q
L	X	X	L
H	↑	H	H
H	↑	L	L
H	L	X	Q_0

logic symbol†

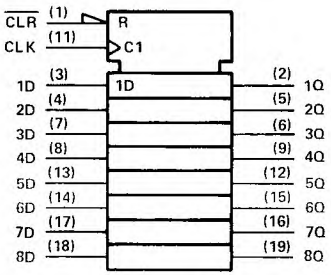

† This symbol is in accordance with ANSI/IEEE Std. 91-1984 and IEC Publication 617-12.
Pin numbers shown are for DW, J, N, and W packages

PRODUCTION DATA documents contain information current as of publication date. Products conform to specifications per the terms of Texas Instruments standard warranty. Production processing does not necessarily include testing of all parameters.

schematics of inputs and outputs

'273

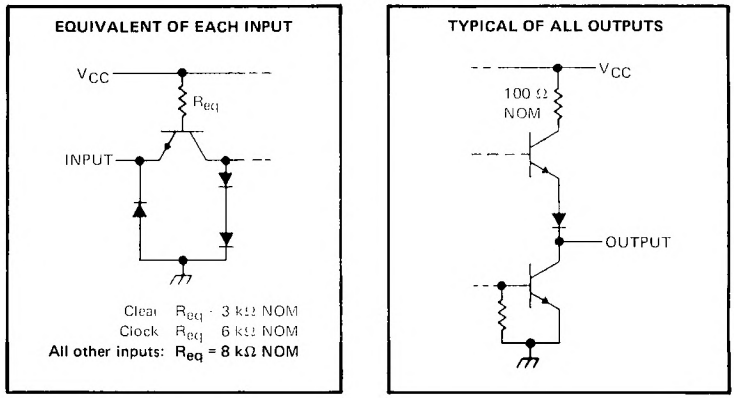

'LS273

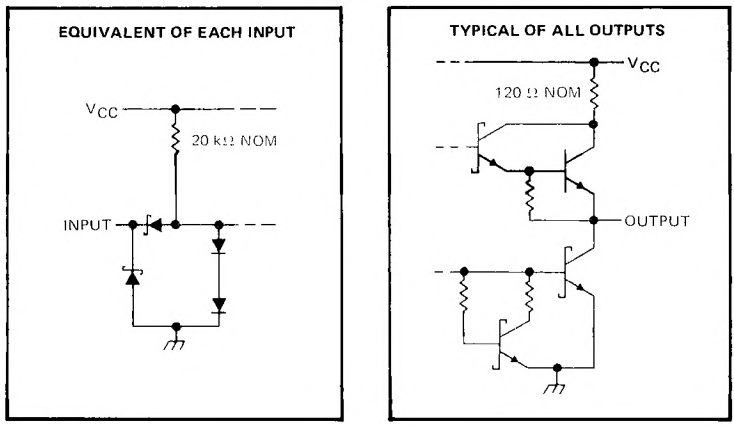

logic diagram (positive logic)

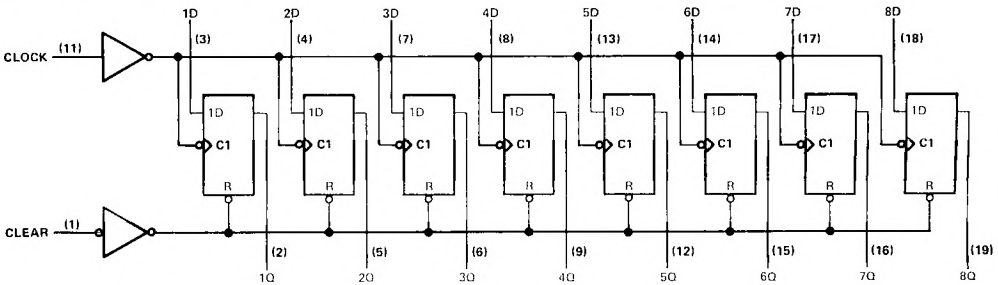

Pin numbers shown are for DW, J, N, and W packages.

TEXAS INSTRUMENTS
POST OFFICE BOX 655012 • DALLAS, TEXAS 75265

absolute maximum ratings over operating free-air temperature range (unless otherwise noted)

Supply voltage, V_{CC} (see Note 1) . . . . . 7 V
Input voltage . . . . . 5.5 V
Operating free-air temperature range: SN54273 . . . . . −55°C to 125°C
SN74273 . . . . . 0°C to 70°C
Storage temperature range . . . . . −65°C to 150°C

NOTE 1: Voltage values are with respect to network ground terminal.

recommended operating conditions

		SN54273			SN74273			UNIT
		MIN	NOM	MAX	MIN	NOM	MAX	
Supply voltage, V_{CC}		4.5	5	5.5	4.75	5	5.25	V
High-level output current, I_{OH}				−0.4			−0.4	mA
Low-level output current, I_{OL}				12			16	mA
Clock frequency, f_{clock}		0		30	0		30	MHz
Width of clock or clear pulse, t_w		16.5			16.5			ns
Set-up time, t_{su}	Data input	20↑			20↑			ns
	Clear inactive state	25↑			25↑			
Data hold time, t_h		5↑			5↑			ns
Operating free-air temperature, T_A		−55		125	0		70	°C

↑The arrow indicates that the rising edge of the clock pulse is used for reference

electrical characteristics over recommended operating free-air temperature range (unless otherwise noted)

PARAMETER			TEST CONDITIONS†	MIN	TYP‡	MAX	UNIT
V_{IH}	High-level input voltage			2			V
V_{IL}	Low-level input voltage					0.8	V
V_{IK}	Input clamp voltage		V_{CC} = MIN, I_I = −12 mA			−1.5	V
V_{OH}	High-level output voltage		V_{CC} = MIN, V_{IH} = 2 V, V_{IL} = 0.8 V, I_{OH} = −800 μA	2.4	3.4		V
V_{OL}	Low-level output voltage		V_{CC} = MIN, V_{IH} = 2 V, V_{IL} = 0.8 V, I_{OL} = 16 mA			0.4	V
I_I	Input current at maximum input voltage		V_{CC} = MAX, V_I = 5.5 V			1	mA
I_{IH}	High-level input current	Clear	V_{CC} = MAX, V_I = 2.4 V			80	μA
		Clock or D				40	
I_{IL}	Low-level input current	Clear	V_{CC} = MAX, V_I = 0.4 V			−3.2	mA
		Clock or D				−1.6	
I_{OS}	Short-circuit output current§		V_{CC} = MAX	−18		−57	mA
I_{CC}	Supply current		V_{CC} = MAX, See Note 2		62	94	mA

†For conditions shown as MIN or MAX, use the appropriate value specified under recommended operating conditions.
‡All typical values are at V_{CC} = 5 V, T_A = 25°C.
§Not more than one output should be shorted at a time.

NOTE 2: With all outputs open and 4.5 V applied to all data and clear inputs, I_{CC} is measured after a momentary ground, then 4.5 V, is applied to clock.

switching characteristics, V_{CC} = 5 V, T_A = 25°C

PARAMETER		TEST CONDITIONS	MIN	TYP	MAX	UNIT
f_{max}	Maximum clock frequency	C_L = 15 pF, R_L = 400 Ω, See Note 3	30	40		MHz
t_{PHL}	Propagation delay time, high-to-low-level output from clear			18	27	ns
t_{PLH}	Propagation delay time, low-to-high-level output from clock			17	27	ns
t_{PHL}	Propagation delay time, high-to-low-level output from clock			18	27	ns

NOTE 3: Load circuits and voltage waveforms are shown in Section 1.

absolute maximum ratings over operating free-air temperature range (unless otherwise noted)

Supply voltage, V_{CC} (see Note 1) . . . . . 7 V
Input voltage . . . . . 7 V
Operating free-air temperature range: SN54LS273 . . . . . −55°C to 125°C
SN74LS273 . . . . . 0°C to 70°C
Storage temperature range . . . . . −65°C to 150°C

NOTE 1: Voltage values are with respect to network ground terminal

recommended operating conditions

		SN54LS273			SN74LS273			UNIT
		MIN	NOM	MAX	MIN	NOM	MAX	
Supply voltage, V_{CC}		4.5	5	5.5	4.75	5	5.25	V
High-level output current, I_{OH}				−400			−400	μA
Low-level output current, I_{OL}				4			8	mA
Clock frequency, f_{clock}		0		30	0		30	MHz
Width of clock or clear pulse, t_w		20			20			ns
Set-up time, t_{su}	Data input	20↑			20↑			ns
	Clear inactive state	25↑			25↑			
Data hold time, t_h		5↑			5↑			ns
Operating free-air temperature, T_A		−55		125	0		70	°C

↑The arrow indicates that the rising edge of the clock pulse is used for reference.

electrical characteristics over recommended operating free-air temperature range (unless otherwise noted)

PARAMETER		TEST CONDITIONS†		SN54LS273			SN74LS273			UNIT
				MIN	TYP‡	MAX	MIN	TYP‡	MAX	
V_{IH}	High-level input voltage			2			2			V
V_{IL}	Low-level input voltage					0.7			0.8	V
V_{IK}	Input clamp voltage	V_{CC} = MIN, I_I = −18 mA				−1.5			−1.5	V
V_{OH}	High-level output voltage	V_{CC} = MIN, V_{IH} = 2 V, V_{IL} = V_{IL}max, I_{OH} = −400 μA		2.5	3.4		2.7	3.4		V
V_{OL}	Low-level output voltage	V_{CC} = MIN, V_{IH} = 2 V, V_{IL} = V_{IL}max	I_{OL} = 4 mA		0.25	0.4		0.25	0.4	V
			I_{OL} = 8 mA					0.35	0.5	
I_I	Input current at maximum input voltage	V_{CC} = MAX, V_I = 7 V				0.1			0.1	mA
I_{IH}	High-level input current	V_{CC} = MAX, V_I = 2.7 V				20			20	μA
I_{IL}	Low-level input current	V_{CC} = MAX, V_I = 0.4 V				−0.4			−0.4	mA
I_{OS}	Short-circuit output current§	V_{CC} = MAX		−20		−100	−20		−100	mA
I_{CC}	Supply current	V_{CC} = MAX, See Note 2			17	27		17	27	mA

†For conditions shown as MIN or MAX, use the appropriate value specified under recommended operating conditions.
‡All typical values are at V_{CC} = 5 V, T_A = 25°C.
§Not more than one output should be shorted at a time and duration of short circuit should not exceed one second.
NOTE 2: With all outputs open and 4.5 V applied to all data and clear inputs. I_{CC} is measured after a momentary ground, then 4.5 V is applied to clock.

switching characteristics, V_{CC} = 5 V, T_A = 25°C

PARAMETER		TEST CONDITIONS	MIN	TYP	MAX	UNIT
f_{max}	Maximum clock frequency	C_L = 15 pF, R_L = 2 kΩ, See Note 4	30	40		MHz
t_{PHL}	Propagation delay time, high-to-low-level output from clear			18	27	ns
t_{PLH}	Propagation delay time, low-to-high-level output from clock			17	27	ns
t_{PHL}	Propagation delay time, high-to-low-level output from clock			18	27	ns

NOTE 4: Load circuits and voltage waveforms are shown in Section 1.

TEXAS INSTRUMENTS
POST OFFICE BOX 655012 • DALLAS, TEXAS 75265

- Four J-$\overline{K}$ Flip-Flops in a Single Package . . . Can Reduce FF Package Count by 50%
- Separate Negative-Edge-Triggered Clocks with Hysteresis . . . Typically 200 mV
- Typical Clock Input Frequency . . . 50 MHz
- Fully Buffered Outputs

SN54276 . . . J PACKAGE
SN74276 . . . N PACKAGE
(TOP VIEW)

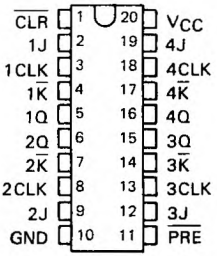

description

These quadruple TTL J-$\overline{K}$ flip-flops incorporate a number of third-generation IC features that can simplify system design and reduce flip-flop package count by up to 50%. They feature hysteresis at each clock input, fully buffered outputs, and direct clear capability, and are presettable through a buffer that also features an input hysteresis loop. The negative-edge-triggering clocks are directly compatible with earlier Series 54/74 single and dual pulse-triggered flip-flops. These circuits can be used to emulate D- or T-type flip-flops by hard-wiring the inputs, or to implement asychronous sequential functions.

The SN54276 is characterized for operation over the full military temperature range of −55°C to 125°C; the SN74726 is characterized for operation from 0°C to 70°C.

FUNCTION TABLE (EACH FLIP-FLOP)

[illegible] INPUTS		INPUTS			OUTPUT
[illegible]	$\overline{CLR}$	CLK	J	$\overline{K}$	Q
L	H	X	X	X	H
H	L	X	X	X	L
L	L	X	X	X	H†
H	H	↓	L	H	Q_0
H	H	↓	H	H	H
H	H	↓	L	L	L
H	H	↓	H	L	TOGGLE
H	H	H	X	X	Q_0

† This configuration is nonstable; that is, it may not persist when preset and clear return to their inactive (high) level.

logic symbol‡

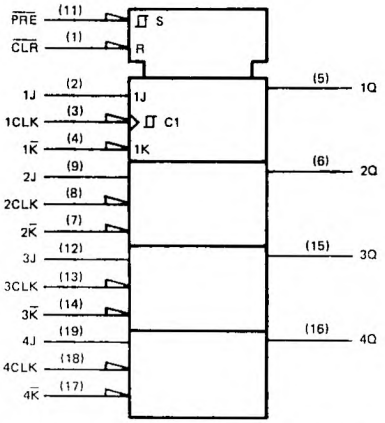

‡ This symbol is in accordance with ANSI/IEEE Std 91-1984 and IEC Publication 617-12.

PRODUCTION DATA documents contain information current as of publication date. Products conform to specifications per the terms of Texas Instruments standard warranty. Production processing does not necessarily include testing of all parameters.

schematics of inputs and outputs

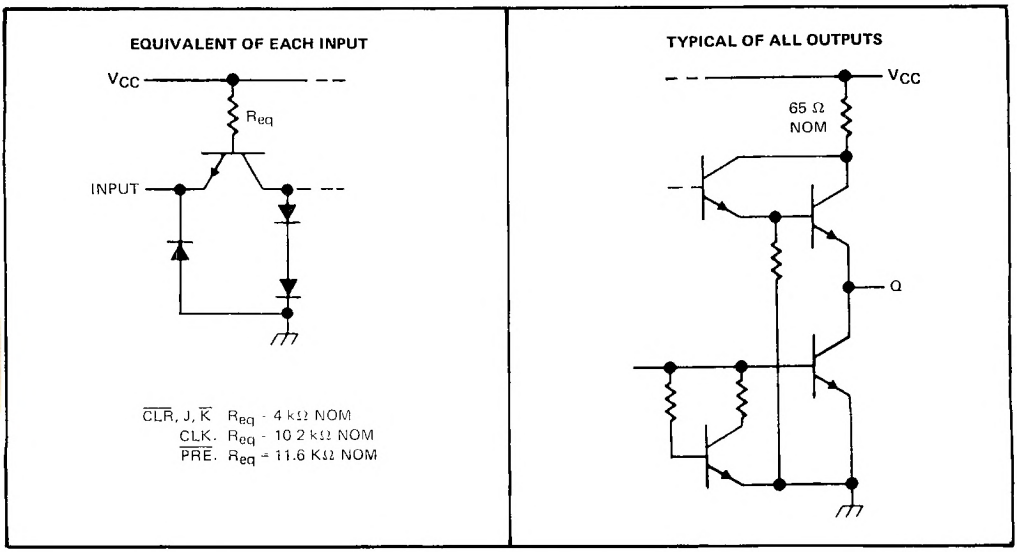

absolute maximum ratings over operating free-air temperature range (unless otherwise noted)

Supply voltage, V_{CC} (see Note 1) . . . . . 7 V
Input voltage . . . . . 5.5 V
Operating free-air temperature range: SN54276 . . . . . −55°C to 125°C
SN74276 . . . . . 0°C to 70°C
Storage temperature range . . . . . −65°C to 150°C

NOTE 1: Voltage values are with respect to network ground terminal.

TEXAS INSTRUMENTS
POST OFFICE BOX 655012 • DALLAS, TEXAS 75265

recommended operating conditions

		SN54276			SN74276			UNIT
		MIN	NOM	MAX	MIN	NOM	MAX	
Supply voltage, V_{CC}		4.5	5	5.5	4.75	5	5.25	V
High-level output current, I_{OH}				−800			−800	μA
Low-level output current, I_{OL}				16			16	mA
Clock frequency		0		35	0		35	MHz
Pulse width, t_w	Clock high	13.5			13.5			ns
	Clock low	15			15			
	Preset or clear low	12			12			
Setup time, t_{su}	J, $\overline{K}$ inputs	3↓			3↓			ns
	Clear and preset inactive state	10↓			10↓			
Input hold time, t_h		10↓			10↓			ns
Operating free-air temperature, T_A		−55		125	0		70	°C

↓ The arrow indicates that the falling edge of the clock pulse is used for reference.

electrical characteristics over recommended operating free-air temperature range (unless otherwise noted)

PARAMETER		TEST CONDITIONS†		MIN	TYP‡	MAX	UNIT
V_{IH}	High-level input voltage			2			V
V_{IL}	Low-level input voltage					0.8	V
V_{IK}	Input clamp voltage	V_{CC} = MIN,	I_I = −12 mA			−1.5	V
V_{OH}	High-level output voltage	V_{CC} = MIN, V_{IL} = 0.8 V,	V_{IH} = 2 V, I_{OH} = −800 μA	2.4	3.4		V
V_{OL}	Low-level output voltage	V_{CC} = MIN, V_{IL} = 0.8 V,	V_{IH} = 2 V, I_{OL} = 16 mA		0.2	0.4	V
I_I	Input current at maximum input voltage	V_{CC} = MAX,	V_I = 5.5 V			1	mA
I_{IH}	High-level input current	V_{CC} = MAX,	V_I = 2.4 V			40	μA
I_{IL}	Low-level input current	V_{CC} = MAX,	V_I = 0.4 V			−1.6	mA
I_{OS}	Short-circuit output current§	V_{CC} = MAX		−30		−85	mA
I_{CC}	Supply current	V_{CC} = MAX			60	81	mA

†For conditions shown as MIN or MAX, use the appropriate value specified under recommended operating conditions.
‡All typical values are at V_{CC} = 5 V, T_A = 25°C.
§Not more than one output should be shorted at a time.

switching characteristics, V_{CC} = 5 V, T_A = 25°C

PARAMETER		TEST CONDITIONS	MIN	TYP	MAX	UNIT
f_{max}	Maximum clock frequency	C_L = 15 pF, R_L = 400 Ω, See Note 2	35	50		MHz
t_{PLH}	Propagation delay time, low-to-high-level output from preset			15	25	ns
t_{PHL}	Propagation delay time, high-to-low-level output from clear			18	30	ns
t_{PLH}	Propagation delay time, low-to-high level output from clock			17	30	ns
t_{PHL}	Propagation delay time, high-to-low level output from clock			20	30	ns

NOTE 2: Load circuits and voltage waveforms are shown in Section 1.

MAY 1972—REVISED MARCH 1988

- Latched Data Inputs Serve as Buffer Register and Can also:
  - Synchronize Data Acquisition
  - "Debounce" Mechanical Switch Input
- Cascading Input P0 and Output P1 Provides "Busy"Signal Inhibiting All Lower-Order Bits
- Full TTL Compatibility
- Use for:
  - Priority Interrupt
  - Synchronous Priority Line Selection

SN54278 . . . J OR W PACKAGE
SN74278 . . . N PACKAGE
(TOP VIEW)

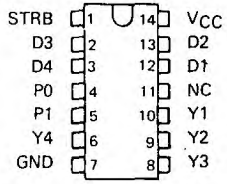

NC—No internal connection

description

The SN54278 and SN74278 each consist of four data latches, full priority output gating, and a cascading gate. The highest-order data applied at a D latch input is transferred to the appropriate Y output while the strobe input is high, and when the strobe goes low all data is latched. The cascading input P0 is fully overriding and on the highest-order package this input must be held at a low logic level. The P1 output is intended for connection to the P0 input of the next lower-order package and will provide a "busy" (high-level) signal to inhibit all subsequent lower-order packages.

After the overriding P0 input, the order of priority is D1, D2, D3, and D4, respectively, within the package.

FUNCTION TABLE

INPUTS						INTERNAL LATCH NODES				OUTPUTS				
P0	G	D1	D2	D3	D4	$\bar{Q}1$	$\bar{Q}2$	$\bar{Q}3$	$\bar{Q}4$	Y1	Y2	Y3	Y4	P1
L	H	H	X	X	X	L	X	X	X	H	L	L	L	H
L	H	L	H	X	X	H	L	X	X	L	H	L	L	H
L	H	L	L	H	X	H	H	L	X	L	L	H	L	H
L	H	L	L	L	H	H	H	H	L	L	L	L	H	H
L	H	L	L	L	L	H	H	H	H	L	L	L	L	L
L	L	X	X	X	X	Latched when G goes low				Same function of $\bar{Q}$ nodes as on 1st 5 lines				
H	L	X	X	X	X					L	L	L	L	H
H	H	Internal $\bar{Q}$ levels are same function of D inputs as on first 5 lines								L	L	L	L	H

H = high level, L = low level, X = irrelevant

logic diagram (positive logic)

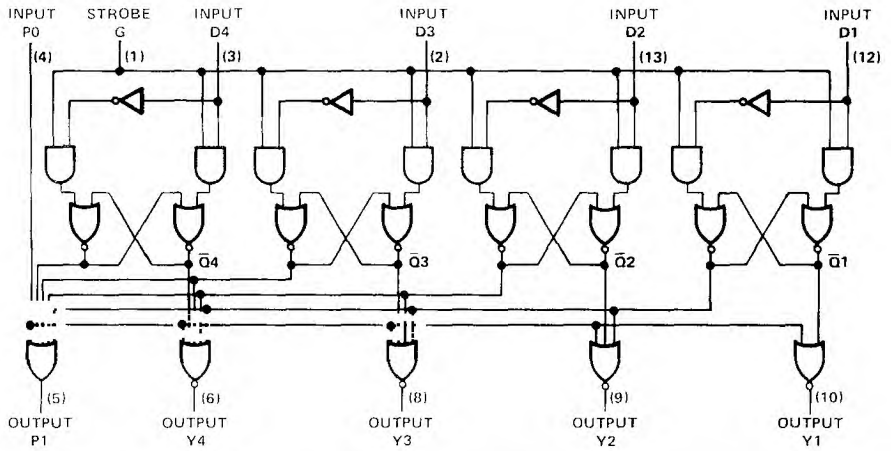

PRODUCTION DATA documents contain information current as of publication date. Products conform to specifications per the terms of Texas Instruments standard warranty. Production processing does not necessarily include testing of all parameters.

absolute maximum ratings over operating free-air temperature range (unless otherwise noted)

Supply voltage, V_{CC} (see Note 1) . . . . . 7 V
Input voltage . . . . . 5.5 V
Interemitter voltage (see Note 2) . . . . . 5.5 V
Operating free-air temperature range: SN54278 Circuits . . . . . −55°C to 125°C
SN74278 Circuits . . . . . 0°C to 70°C
Storage temperature range . . . . . −65°C to 150°C

NOTES: 1. Voltage values, except interemitter voltage, are with respect to network ground terminal.
2. This is the voltage between two emitters of a multiple-emitter transistor. For this circuit, this rating applies between the strobe input and any of the four data inputs.

recommended operating conditions

	SN54278			SN74278			UNIT
	MIN	NOM	MAX	MIN	NOM	MAX	
Supply voltage, V_{CC}	4.5	5	5.5	4.75	5	5.25	V
High-level output current, I_{OH}			−800			−800	μA
Low-level output current, I_{OL}			16			16	mA
Data setup time, t_{su} (see Figure 1)	20			20			ns
Data hold time, t_h (see Figure 1)	5			5			ns
Strobe pulse width, t_w (see Figure 1)	20			20			ns
Operating free-air temperature, T_A	−55		125	0		70	°C

electrical characteristics over recommended operating free-air temperature range (unless otherwise noted)

PARAMETER			TEST CONDITIONS†		MIN	TYP	MAX	UNIT
V_{IH}	High-level input voltage				2			V
V_{IL}	Low-level input voltage						0.8	V
V_{IK}	Input clamp voltage		V_{CC} = MIN, I_I = −12 mA				−1.5	V
V_{OH}	High-level output voltage		V_{CC} = MIN, V_{IH} = 2 V, V_{IL} = 0.8 V, I_{OH} = −800 μA		2.4	3.4		V
V_{OL}	Low-level output voltage		V_{CC} = MIN, V_{IH} = 2 V, V_{IL} = 0.8 V, I_{OL} = 16 mA			0.2	0.4	V
I_I	Input current at maximum input voltage		V_{CC} = MAX, V_I = 5.5 V				1	mA
I_{IH}	High-level input current	Any D input	V_{CC} = MAX, V_I = 2.4 V				80	μA
		P0 input					200	
		G input					320	
I_{IL}	Low-level input current	Any D input	V_{CC} = MAX, V_I = 0.4 V				−3.2	mA
		P0 input					−8	
		G input					−12.8	
I_{OS}	Short-circuit output current§		V_{CC} = MAX	SN54278	−18		−55	mA
				SN74278	−18		−57	
I_{CC}	Supply current		V_{CC} = MAX, See Note 3			55	80	mA

† For conditions shown as MIN or MAX, use the appropriate value specified under recommended operating conditions for the applicable type.
‡ All typical values are at V_{CC} = 5 V, T_A = 25°C.
§ Not more than one output should be shorted at a time.
NOTE 3: I_{CC} is measured with the P0 input grounded, all other inputs at 4.5 V, and outputs open.

TEXAS INSTRUMENTS
POST OFFICE BOX 655012 • DALLAS, TEXAS 75265

switching characteristics, V_{CC} = 5 V, T_A = 25°C

PARAMETER†	FROM (INPUT)	TO (OUTPUT)	WAVEFORMS	TEST CONDITIONS	MIN	TYP	MAX	UNIT
t_{PLH}	Data	Y	A and C (with strobe high)	C_L = 15 pF, R_L = 400 Ω, See Figure 1			30	ns
t_{PHL}							39	
t_{PLH}	Data	Y	A and D (with strobe high)				38	ns
t_{PHL}							31	
t_{PLH}	Data	P1	A and E (with strobe high)				46	ns
t_{PHL}							39	
t_{PLH}	Strobe	Any Y	B and C or B and D				30	ns
t_{PHL}							31	
t_{PLH}	Strobe	P1	B and E				38	ns
t_{PHL}							42	
t_{PLH}	P0	P1	F and G				23	ns
t_{PHL}							30	

†t_{PLH} = propagation delay time, low-to-high-level output
t_{PHL} = propagation delay time, high-to-low-level output

schematics of inputs and outputs

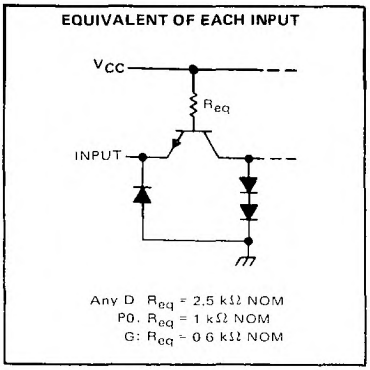

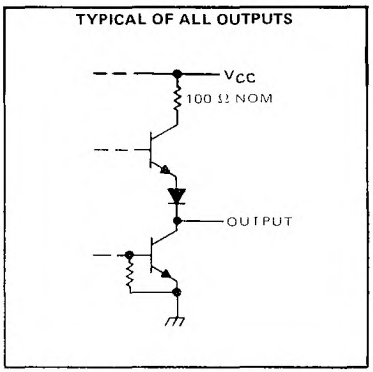

logic symbol†

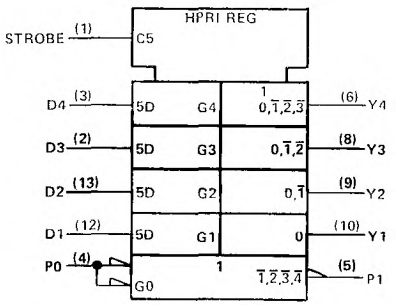

†This symbol is in accordance with ANSI/IEEE Std 91-1984 and IEC Publication 617-12.

PARAMETER MEASUREMENT INFORMATION

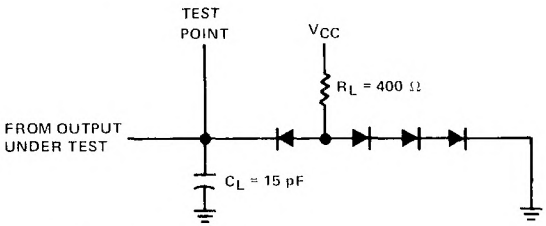

C_L includes probe and jig capacitance
All diodes are 1N3064

LOAD CIRCUIT

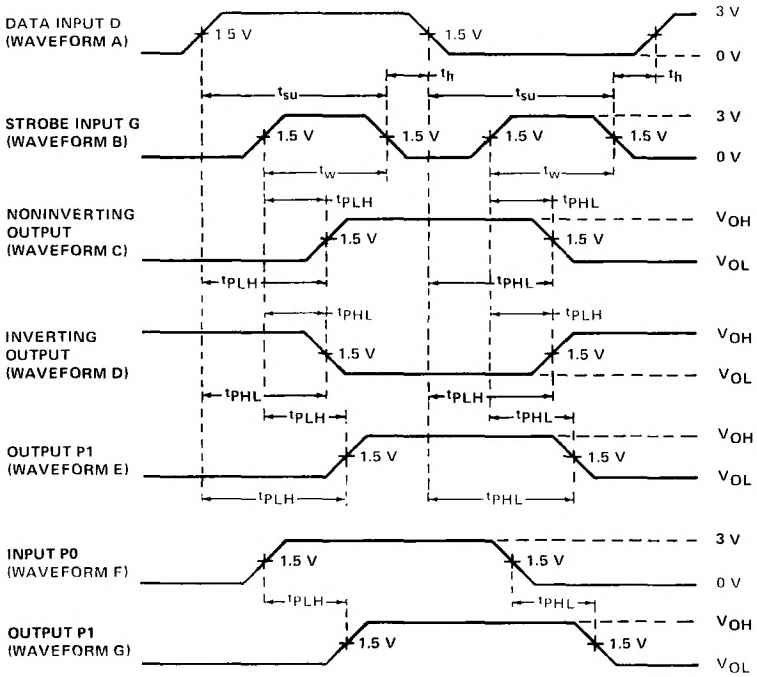

VOLTAGE WAVEFORMS

NOTE: Input pulses are supplied by a generator having the following characteristics: $t_r \leq 7$ ns, $t_f \leq 7$ ns, PRR ≤ MHz, $Z_{out} \approx 50\Omega$.

FIGURE 1–SWITCHING TIMES

TEXAS INSTRUMENTS
POST OFFICE BOX 655012 • DALLAS, TEXAS 75265

DECEMBER 1983 – REVISED MARCH 1988

- **Package Options Include Plastic "Small Outline" Packages, Ceramic Chip Carriers and Flat Packages, and Plastic and Ceramic DIPs**
- **Dependable Texas Instruments Quality and Reliability**

description

The '279 offers 4 basic $\overline{S}$-$\overline{R}$ flip-flop latches in one 16-pin, 300-mil package. Under conventional operation, the $\overline{S}$-$\overline{R}$ inputs are normally held high. When the $\overline{S}$ input is pulsed low, the Q output will be set high. When $\overline{R}$ is pulsed low, the Q output will be reset low. Normally, the $\overline{S}$-$\overline{R}$ inputs should not be taken low simultaneously. The Q output will be unpredictable in this condition.

FUNCTION TABLE
(each latch)

INPUTS		OUTPUT
$\overline{S}$†	$\overline{R}$	Q
H	H	Q_0
L	H	H
H	L	L
L	L	H‡

H = high level L = low level

†For latches with double S inputs:

Q_0 = the level of Q before the indicated input conditions were established.

‡This configuration is nonstable: that is, it may not persist when the $\overline{S}$ and $\overline{R}$ inputs return to their inactive (high) level.

H = both $\overline{S}$ inputs high

L = one or both $\overline{S}$ inputs low

logic diagram (positive logic)

(latches 1 and 3)

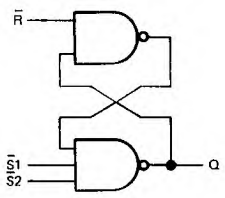

(latches 2 and 4)

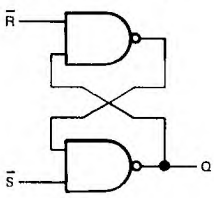

SN54279, SN54LS279A . . . J OR W PACKAGE
SN74279 . . . N PACKAGE
SN74LS279A . . . D OR N PACKAGE
(TOP VIEW)

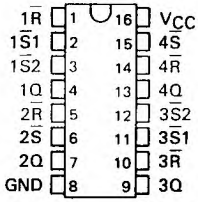

SN54LS279A . . . FK PACKAGE
(TOP VIEW)

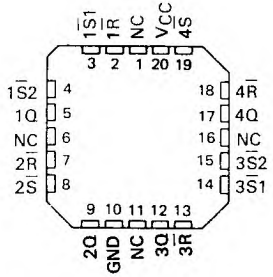

NC – No internal connection

logic symbol§

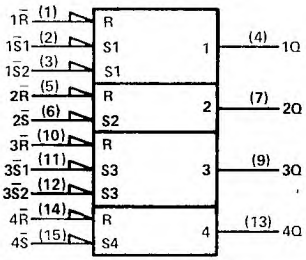

§This symbol is in accordance with ANSI/IEEE Std. 91-1984 and IEC Publication 617-12.

Pin numbers shown are for D, J, N, and W packages.

PRODUCTION DATA documents contain information current as of publication date. Products conform to specifications per the terms of Texas Instruments standard warranty. Production processing does not necessarily include testing of all parameters.

schematics of inputs and outputs

'279 CIRCUITS

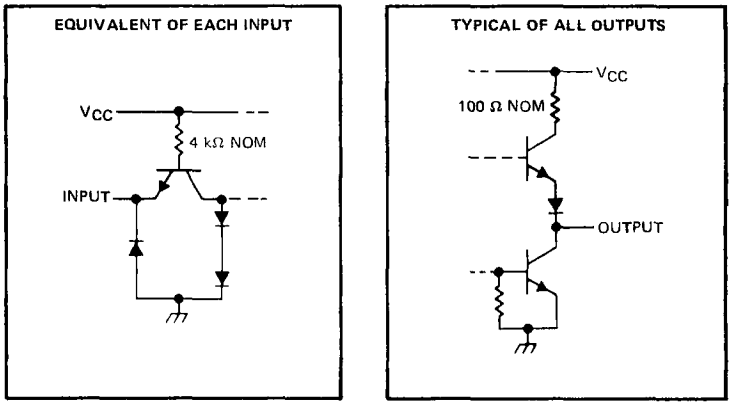

'LS279A CIRCUITS

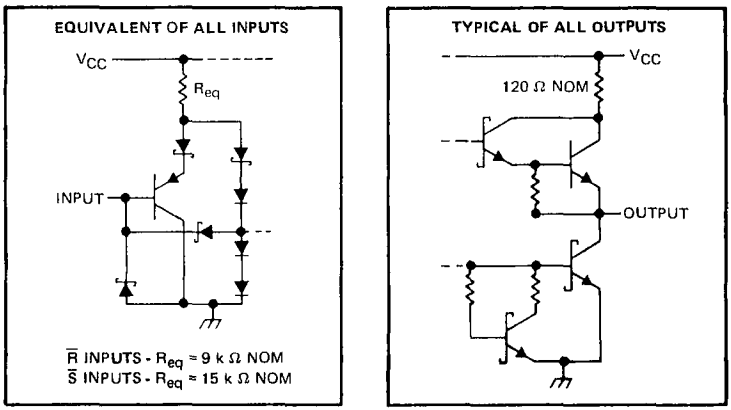

absolute maximum ratings over operating free-air temperature range (unless otherwise noted)

Supply voltage, V_{CC} (see Note 1) . . . . . 7 V
Input voltage: '279 . . . . . 5.5 V
' LS279A . . . . . 7 V
Operating free-air temperature range: SN54' TYPES . . . . . −55°C to 125°C
SN74' TYPES . . . . . 0°C to 70°C
Storage temperature range . . . . . −65°C to 150°C

NOTE 1: Voltage values are with respect to network ground terminal.

TEXAS INSTRUMENTS
POST OFFICE BOX 655012 • DALLAS, TEXAS 75265

recommended operating conditions

		SN54279			SN74279			UNIT
		MIN	NOM	MAX	MIN	NOM	MAX	
V_{CC}	Supply voltage	4.5	5	5.5	4.75	5	5.25	V
V_{IH}	High-level input voltage	2			2			V
V_{IL}	Low-level input voltage			0.8			0.8	V
I_{OH}	High-level output current			−0.8			−0.8	mA
I_{OL}	Low-level output current			16			16	mA
t_w	Pulse duration, low	20			20			ns
T_A	Operating free-air temperature	−55		125	0		70	°C

electrical characteristics over recommended operating free-air temperature range (unless otherwise noted)

PARAMETER	TEST CONDITIONS†			SN54279			SN74279			UNIT
				MIN	TYP‡	MAX	MIN	TYP‡	MAX	
V_{IK}	V_{CC} = MIN,	I_I = −12 mA				−1.5			−1.5	V
V_{OH}	V_{CC} = MIN,	V_{IL} = 0.8 V,	I_{OH} = −0.8 mA	2.4	3.4		2.4	3.4		V
V_{OL}	V_{CC} = MIN,	V_{IH} = 2 V,	I_{OL} = 16 mA		0.2	0.4		0.2	0.4	V
I_I	V_{CC} = MAX,	V_I = 5.5 V				1			1	mA
I_{IH}	V_{CC} = MAX,	V_I = 2.4 V				40			40	μA
I_{IL}	V_{CC} = MAX,	V_I = 0.4 V				−1.6			−1.6	mA
I_{OS}§	V_{CC} = MAX			−18		−55	−18		−57	mA
I_{CC}	V_{CC} = MAX,	See Note 2			18	30		18	30	mA

† For conditions shown as MIN or MAX, use the appropriate value specified under recommended operating conditions.
‡ All typical values are at V_{CC} = 5 V, T_A = 25°C.
§ Not more than one output should be shorted at a time.
NOTE 2: I_{CC} is measured with all R inputs grounded, all S inputs at 4.5 V, and all outputs open.

switching characteristics, V_{CC} = 5 V, T_A = 25°C (see note 3)

PARAMETER	FROM (INPUT)	TO (OUTPUT)	TEST CONDITIONS	MIN	TYP	MAX	UNIT
t_{PLH}	$\overline{S}$	Q	R_L = 400 Ω, C_L = 15 pF		12	22	ns
t_{PHL}					9	15	
t_{PHL}	$\overline{R}$	Q			15	27	ns

NOTE 3: Load circuits and voltage waveforms are shown in Section 1.

recommended operating conditions

		SN54LS279A			SN74LS279A			UNIT
		MIN	NOM	MAX	MIN	NOM	MAX	
V_{CC}	Supply voltage	4.5	5	5.5	4.75	5	5.25	V
V_{IH}	High-level input voltage	2			2			V
V_{IL}	Low-level input voltage			0.7			0.8	V
I_{OH}	High-level output current			−0.4			−0.4	mA
I_{OL}	Low-level output current			4			8	mA
t_w	Pulse duration, low	20			20			ns
T_A	Operating free-air temperature	−55		125	0		70	°C

electrical characteristics over recommended operating free-air temperature range (unless otherwise noted)

PARAMETER	TEST CONDITIONS†			SN54LS279A			SN74LS279A			UNIT
				MIN	TYP‡	MAX	MIN	TYP‡	MAX	
V_{IK}	V_{CC} = MIN,	I_I = −18 mA				−1.5			−1.5	V
V_{OH}	V_{CC} = MIN	V_{IL} = MAX,	I_{OH} = −0.4 mA	2.5	3.4		2.7	3.4		V
V_{OL}	V_{CC} = MIN,	V_{IH} = 2 V,	I_{OL} = 4 mA		0.25	0.4		0.25	0.4	V
	V_{CC} = MIN,	V_{IH} = 2 V,	I_{OL} = 8 mA					0.25	0.5	
I_I	V_{CC} = MAX,	V_I = 7 V				0.1			0.1	mA
I_{IH}	V_{CC} = MAX,	V_I = 2.7 V				20			20	μA
I_{IL}	V_{CC} = MAX,	V_I = 0.4 V				−0.2			−0.2	mA
I_{OS}§	V_{CC} = MAX			−20		−100	−20		−100	mA
I_{CC}	V_{CC} = MAX,	See note 2			3.8	7		3.8	7	mA

† For conditions shown as MIN or MAX, use the appropriate value specified under recommended operating conditions.

‡ All typical values are at V_{CC} = 5 V, T_A = 25°C.

§ Not more than one output should be shorted at a time, and the duration of the short-circuit should be less than one second.

NOTE 2: I_{CC} is measured with all R inputs grounded, all S inputs at 4.5 V, and all outputs open.

switching characteristics, V_{CC} = 5 V, T_A = 25°C (see note 3)

PARAMETER	FROM (INPUT)	TO (OUTPUT)	TEST CONDITIONS	MIN	TYP	MAX	UNIT
t_{PLH}	$\overline{S}$	Q	R_L = 2 kΩ, C_L = 15 pF		12	22	ns
t_{PHL}					13	21	
t_{PHL}	$\overline{R}$	Q			15	27	ns

NOTE 3: Load circuits and voltage waveforms are shown in Section 1.

TEXAS INSTRUMENTS
POST OFFICE BOX 655012 • DALLAS, TEXAS 75265

DECEMBER 1972 – REVISED MARCH 1988

- **Generates Either Odd or Even Parity for Nine Data Lines**
- **Cascadable for n-Bits**
- **Can Be Used to Upgrade Existing Systems using MSI Parity Circuits**
- **Typical Data-to-Output Delay of Only 14 ns for 'S280 and 33 ns for 'LS280**
- **Typical Power Dissipation:**
  'LS280 . . . 80 mW
  'S280 . . . 335 mW

SN54LS280, SN54S280 . . . J OR W PACKAGE
SN74LS280, SN74S280 . . . D OR N PACKAGE
(TOP VIEW)

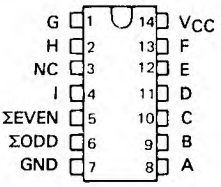

SN54LS280, SN54S280 . . . FK PACKAGE
(TOP VIEW)

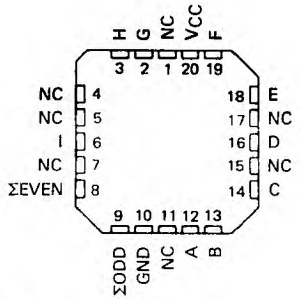

NC – No internal connection

FUNCTION TABLE

NUMBER OF INPUTS A THRU I THAT ARE HIGH	OUTPUTS Σ EVEN	OUTPUTS Σ ODD
0, 2, 4, 6, 8	H	L
1, 3, 5, 7, 9	L	H

H = high level, L = low level

logic symbol†

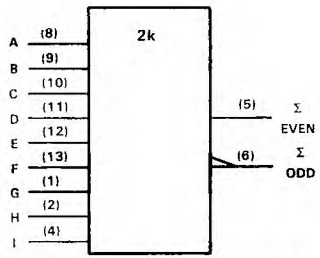

†This symbol is in accordance with ANSI/IEEE Std. 91-1984 and IEC Publication 617-12.
Pin numbers shown are for D, J, N, and W packages.

description

These universal, monolithic, nine-bit parity generators/checkers utilize Schottky-clamped TTL high-performance circuitry and feature odd/even outputs to faciliate operation of either odd or even parity application. The word-length capability is easily expanded by cascading as shown under typical application data.

Series 54LS/74LS and Series 54S/74S parity generators/checkers offer the designer a trade-off between reduced power consumption and high performance. These devices can be used to upgrade the performance of most systems utilizing the '180 parity generator/checker. Although the 'LS280 and 'S280 are implemented without expander inputs, the corresponding function is provided by the availability of an input at pin 4 and the absence of any internal connection at pin 3. This permits the 'LS280 and 'S280 to be substituted for the '180 in existing designs to produce an identical function even if 'LS280's and 'S280's are mixed with existing '180's.

These devices are fully compatible with most other TTL circuits. All 'LS280 and 'S280 inputs are buffered to lower the drive requirements to one Series 54LS/74LS or Series 54S/74S standard load, respectively.

PRODUCTION DATA documents contain information current as of publication date. Products conform to specifications per the terms of Texas Instruments standard warranty. Production processing does not necessarily include testing of all parameters.

schematics of inputs and outputs

'LS280

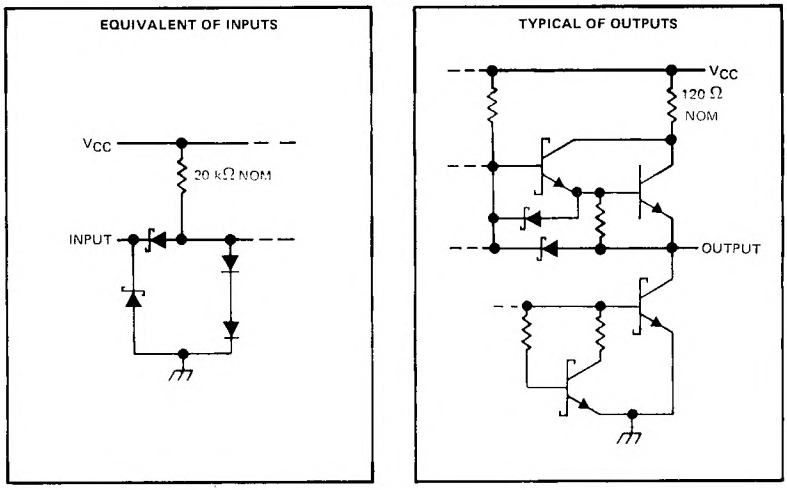

'S280

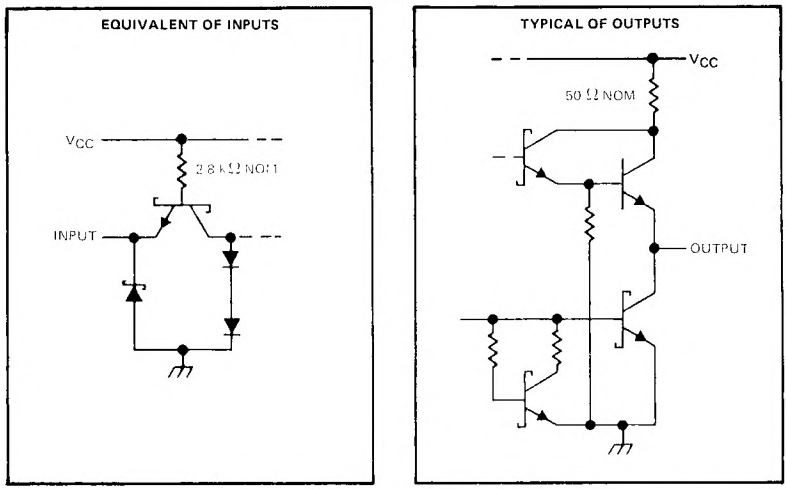

absolute maximum ratings over operating free-air temperature range (unless otherwise noted)

Supply voltage (see Note 1)	7 V
Input voltage: 'LS280	7 V
'S280	5.5 V
Operating free-air temperature range: SN54'	−55°C to 125°C
SN74'	0°C to 70°C
Storage temperature range	−65°C to 150°C

NOTE 1: Voltage values are with respect to network ground terminal.

TEXAS INSTRUMENTS
POST OFFICE BOX 655012 • DALLAS, TEXAS 75265

recommended operating conditions

		SN54LS280			SN74LS280			UNIT
		MIN	NOM	MAX	MIN	NOM	MAX	
V_{CC}	Supply voltage	4.5	5	5.5	4.75	5	5.25	V
V_{IH}	High-level input voltage	2			2			V
V_{IL}	Low-level input voltage			0.7			0.8	V
I_{OH}	High-level output current			−0.4			−0.4	mA
I_{OL}	Low-level output current			4			8	mA
T_A	Operating free-air temperature	−55		125	0		70	°C

electrical characteristics over recommended operating free-air temperature range (unless otherwise noted)

PARAMETER	TEST CONDITIONS		SN54L . .			SN74L . .			UNIT
			MIN	TYP‡	MAX	MIN	TYP‡	MAX	
V_{IK}	V_{CC} = MIN, I_I = −18 mA				−1.5			−1.5	V
V_{OH}	V_{CC} = MIN, V_{IH} = 2 V, V_{IL} = MAX, I_{OH} = −0.4 mA		2.5	3.4		2.7	3.4		V
V_{OL}	V_{CC} = MIN, V_{IH} = 2 V, V_{IL} = MAX	I_{OL} = 4 mA		0.25	0.4		0.25	0.4	V
		I_{OL} = 8 mA					0.35	0.5	
I_I	V_{CC} = MAX, V_I = 7 V				0.1			0.1	mA
I_{IH}	V_{CC} = MAX, V_I = 2.7 V				20			20	μA
I_{IL}	V_{CC} = MAX, V_I = 0.4 V				−0.4			−0.4	mA
I_{OS}§	V_{CC} = MAX		−20		−100	−20		−100	mA
I_{CC}	V_{CC} = MAX, See Note 2			16	27		16	27	mA

† For conditions shown as MIN or MAX, use the appropriate value specified under recommended operating conditions.
‡ All typical values are at V_{CC} = 5 V, T_A = 25°C.
§ Not more than one output should be shorted at a time and duration of the short circuit should not exceed one second.
NOTE 2: I_{CC} is measured with all inputs grounded and all outputs open.

switching characteristics, V_{CC} = 5 V, T_A = 25°C

PARAMETER¶	FROM (INPUT)	TO (OUTPUT)	TEST CONDITIONS	MIN	TYP	MAX	UNIT
t_{PLH}	Data	Σ Even	C_L = 15 pF, R_L = 2 kΩ, Inputs not under test at 0 V, See Note 3		33	50	ns
t_{PHL}					29	45	
t_{PLH}	Data	Σ Odd			23	35	ns
t_{PHL}					31	50	

¶ t_{PLH} = propagation delay time, low-to-high-level output, t_{PHL} = propagation delay time, high-to-low-level output
NOTE 3: Load circuits and voltage waveforms are shown in Section 1.

recommended operating conditions

	SN54S280			SN74S280			UNIT
	MIN	NOM	MAX	MIN	NOM	MAX	
Supply voltage, V_{CC}	4.5	5	5.5	4.75	5	5.25	V
High-level output current, I_{OH}			−1			−1	mA
Low-level output current, I_{OL}			20			20	mA
Operating free-air temperature, T_A	−55		125	0		70	°C

electrical characteristics over recommended operating free-air temperature range (unless otherwise noted)

PARAMETER		TEST CONDITIONS†		MIN	TYP‡	MAX	UNIT
V_{IH}	High-level input voltage			2			V
V_{IL}	Low-level input voltage					0.8	V
V_{IK}	Input clamp voltage	V_{CC} = MIN, I_I = −18 mA				−1.2	V
V_{OH}	High-level output voltage	V_{CC} = MIN, V_{IH} = 2 V, V_{IL} = 0.8 V, I_{OH} = −1 mA	SN54S'	2.5	3.4		V
			SN74S'	2.7	3.4		
V_{OL}	Low-level output voltage	V_{CC} = MIN, V_{IH} = 2 V, V_{IL} = 0.8 V, I_{OL} = 20 mA				0.5	V
I_I	Input current at maximum input voltage	V_{CC} = MAX, V_I = 5.5 V				1	mA
I_{IH}	High-level input current	V_{CC} = MAX, V_I = 2.7 V				50	μA
I_{IL}	Low-level input current	V_{CC} = MAX, V_I = 0.5 V				−2	mA
I_{OS}	Short-circuit output current§	V_{CC} = MAX		−40		−100	mA
I_{CC}	Supply current	V_{CC} = MAX, See Note 2	—		67	99	mA
					67	105	
		V_{CC} = MAX, T_A = 125°C, See Note 2	SN54S280N			94	mA

† For conditions shown as MIN or MAX, use the appropriate value specified under recommended operating conditions.
‡ All typical values are at V_{CC} = 5 V, T_A = 25°C.
§ Not more than one output should be shorted at a time and duration of the short circuit should not exceed one second.
NOTE 2: I_{CC} is measured with all inputs grounded and all outputs open.

switching characteristics, V_{CC} = 5 V, T_A = 25°C

PARAMETER¶	FROM (INPUT)	TO (OUTPUT)	TEST CONDITIONS	MIN	TYP	MAX	UNIT
t_{PLH}	Data	Σ Even	C_L = 15 pF, R_L = 280 Ω, See Note 3		14	21	ns
t_{PHL}					11.5	18	
t_{PLH}	Data	Σ Odd			14	21	ns
t_{PHL}					11.5	18	

¶ t_{PLH} = propagation delay time, low-to-high-level output; t_{PHL} = propagation delay time, high-to-low-level output
NOTE 3: Load circuits and voltage waveforms are shown in Section 1.

TEXAS INSTRUMENTS
POST OFFICE BOX 655012 • DALLAS, TEXAS 75265

logic diagram (positive logic)

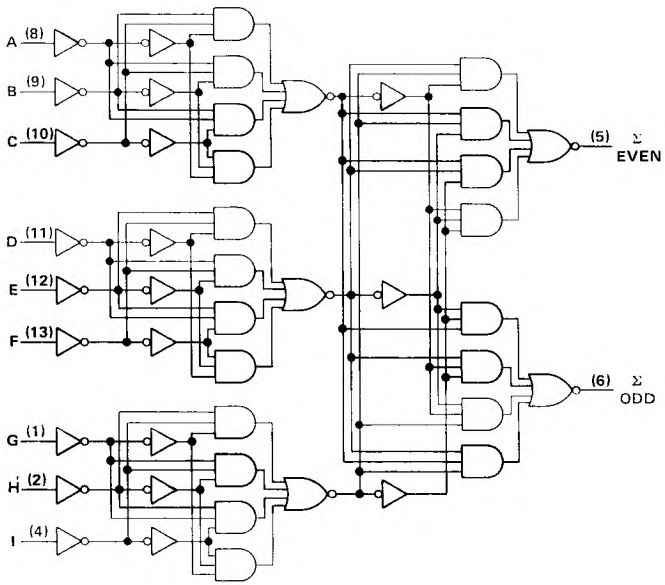

Pin numbers shown are for D, J, N, and W packages.

TYPICAL APPLICATION DATA

25-LINE PARITY/GENERATOR CHECKER

Three 'LS280's or 'S280's can be used to implement a 25-line parity generator/checker. This arrangement will provide parity in typically 75 or 25 nanoseconds respectively.

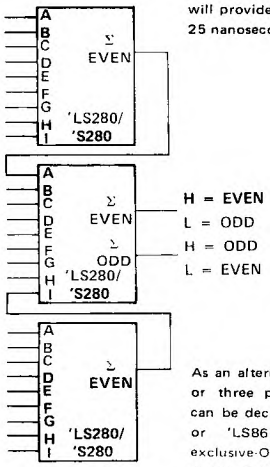

As an alternative, the outputs of two or three parity generators/checkers can be decoded with a 2-input ('S86 or 'LS86) or 3-input ('S135) exclusive-OR gate for 18 or 27 line parity applications

81-LINE PARITY/GENERATOR CHECKER

Longer word lengths can be implemented by cascading 'LS280's or 'S280's. As shown here, parity can be generated for word lengths up to 81 bits in typically 75 or 25 nanoseconds respectively

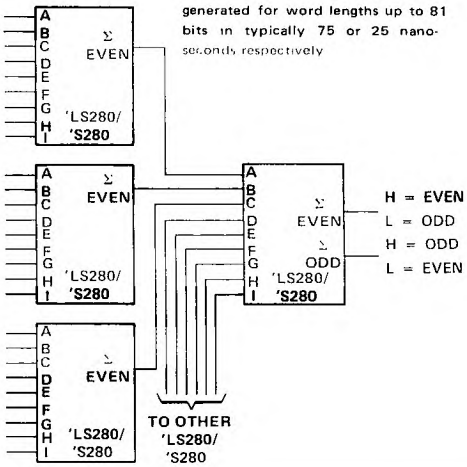

- Full-Carry Look-Ahead Across the Four Bits
- Systems Achieve Partial Look-Ahead Performance with the Economy of Ripple Carry
- Supply Voltage and Ground on Corner Pins to Simplify P-C Board Layout

TYPICAL ADD TIMES

TYPE	TWO 8-BIT WORDS	TWO 16-BIT WORDS	TYPICAL POWER DISSIPATION PER ADDER
'283	23ns	43ns	310 mW
'LS283	25ns	45ns	95 mW
'S283	15ns	30ns	510 mW

description

The '283 and 'LS283 adders are electrically and functionally identical to the '83A and 'LS83A, respectively; only the arrangement of the terminals has been changed. The 'S283 high performance versions are also functionally identical.

These improved full adders perform the addition of two 4-bit binary words. The sum (Σ) outputs are provided for each bit and the resultant carry (C4) is obtained from the fourth bit. These adders feature full internal look-ahead across all four bits generating the carry term in ten nanoseconds, typically, for the '283 and 'LS283, and 7.5 nanoseconds for the 'S283. This capability provides the system designer with partial look-ahead performance at the economy and reduced package count of a ripple-carry implementation.

The adder logic, including the carry, is implemented in its true form. End around carry can be accomplished without the need for logic or level inversion.

Series 54, Series 54LS, and Series 54S circuits are characterized for operation over the full temperature range of −55°C to 125°C. Series 74, Series 74LS, and Series 74S circuits are characterized for 0°C to 70°C operation.

SN54283, SN54LS283 . . . J OR W PACKAGE
SN54S283 . . . J PACKAGE
SN74283 . . . N PACKAGE
SN74LS283, SN74S283 . . . D OR N PACKAGE
(TOP VIEW)

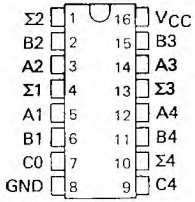

SN54LS283, SN54S283 . . . FK PACKAGE
(TOP VIEW)

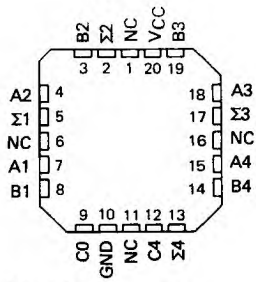

NC – No internal connection

FUNCTION TABLE

INPUT						OUTPUT					
						WHEN C0 = L			WHEN C0 = H		
						WHEN C2 = L			WHEN C2 = H		
A1 / A3	B1 / B3	A2 / A4	B2 / B4	Σ1 / Σ3	Σ2 / Σ4	C2 / C4	Σ1 / Σ3	Σ2 / Σ4	C2 / C4
L	L	L	L	L	L	L	H	L	L
H	L	L	L	H	L	L	L	H	L
L	H	L	L	H	L	L	L	H	L
H	H	L	L	L	H	L	H	H	L
L	L	H	L	L	H	L	H	H	L
H	L	H	L	H	H	L	L	L	H
L	H	H	L	H	H	L	L	L	H
H	H	H	L	L	L	H	H	L	H
L	L	L	H	L	H	L	H	H	L
H	L	L	H	H	H	L	L	L	H
L	H	L	H	H	H	L	L	L	H
H	H	L	H	L	L	H	H	L	H
L	L	H	H	L	L	H	H	L	H
H	L	H	H	H	L	H	L	H	H
L	H	H	H	H	L	H	L	H	H
H	H	H	H	L	H	H	H	H	H

H = high level, L = low level

NOTE: Input conditions at A1, B1, A2, B2, and C0 are used to determine outputs Σ1 and Σ2 and the value of the internal carry C2. The values at C2, A3, B3, A4, and B4 are then used to determine outputs Σ3, Σ4, and C4.

PRODUCTION DATA documents contain information current as of publication date. Products conform to specifications per the terms of Texas Instruments standard warranty. Production processing does not necessarily include testing of all parameters.

logic symbol†

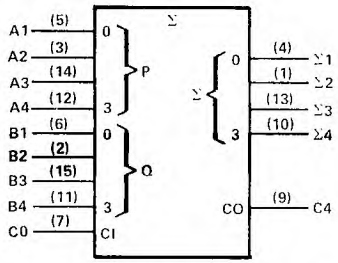

†This symbol is in accordance with ANSI/IEEE Std. 91-1984 and IEC Publication 617-12.
Pin numbers shown are for D, J, N, and W packages.

logic diagram (positive logic)

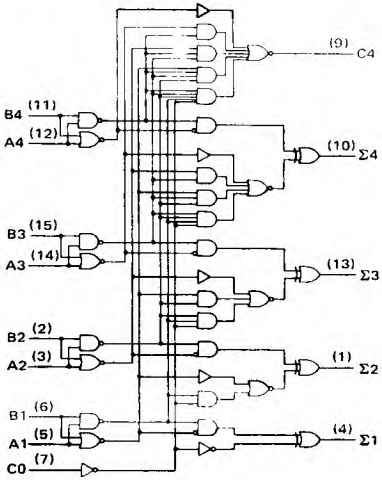

Pin numbers shown are for D, J, N, and W packages.

schematics of inputs and outputs

'283

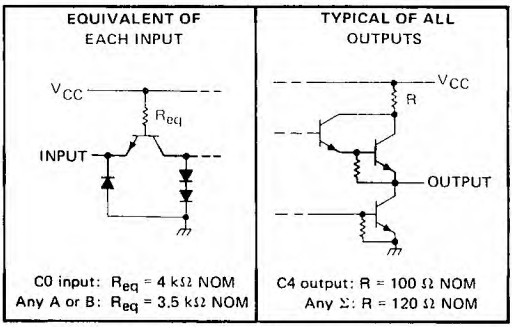

'LS283

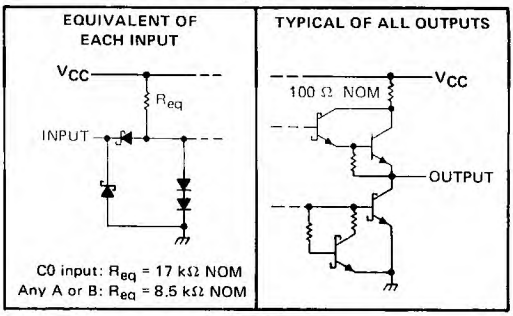

'S283

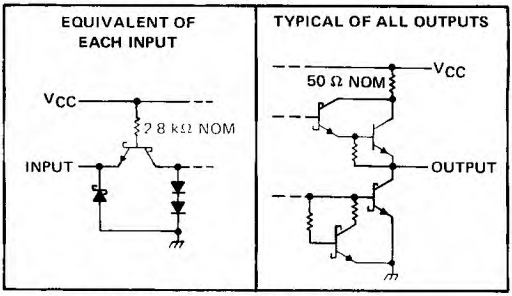

absolute maximum ratings over operating free-air temperature range (unless otherwise noted)

Supply voltage, V_{CC} (see Note 1)		7V
Input voltage: '283, 'S283		5.5V
'LS283		7V
Interemitter voltage (see Note 2)		5.5V
Operating free-air temperature range:	SN54283, SN54LS283, SN54S283	−55°C to 125°C
	SN74283, SN74LS283, SN74S283	0°C to 70°C
Storage temperature range		−65°C to 150°C

NOTES: 1. Voltage values, except interemitter voltage, are with respect to network ground terminal.
2. This is the voltage between two emitters of a multiple-emitter transistor. This rating applies for the '283 and 'S283 only between the following pairs: A1 and B1, A2 and B2, A3 and B3, A4 and B4.

TEXAS INSTRUMENTS
POST OFFICE BOX 655012 • DALLAS, TEXAS 75265

recommended operating conditions

		SN54283			SN74283			UNIT
		MIN	NOM	MAX	MIN	NOM	MAX	
Supply Voltage, V_{CC}		4.5	5	5.5	4.75	5	5.25	V
High-level output current, I_{OH}	Any output except C4			−800			−800	μA
	Output C4			−400			−400	
Low-level output current, I_{OL}	Any output except C4			16			16	mA
	Output C4			8			8	
Operating free-air temperature, T_A		−55		125	0		70	°C

electrical characteristics over recommended operating free-air temperature range (unless otherwise noted)

PARAMETER		TEST CONDITIONS†		SN54283			SN74283			UNIT
				MIN	TYP‡	MAX	MIN	TYP‡	MAX	
V_{IH}	High-level input voltage			2			2			V
V_{IL}	Low-level input voltage					0.8			0.8	V
V_{IK}	Input clamp voltage	V_{CC} = MIN, I_I = −12 mA				−1.5			−1.5	V
V_{OH}	High-level output voltage	V_{CC} = MIN, V_{IH} = 2 V, V_{IL} = 0.8 V, I_{OH} = MAX		2.4	3.6		2.4	3.6		V
V_{OL}	Low-level output voltage	V_{CC} = MIN, V_{IH} = 2 V, V_{IL} = 0.8 V, I_{OL} = MAX			0.2	0.4		0.2	0.4	V
I_I	Input current at maximum input voltage	V_{CC} = MAX, V_I = 5.5 V				1			1	mA
I_{IH}	High-level input current	V_{CC} = MAX, V_I = 2.4 V				40			40	μA
I_{IL}	Low-level input current	V_{CC} = MAX, V_I = 0.4 V				−1.6			−1.6	mA
I_{OS}	Short-circuit output current§	V_{CC} = MAX	Any output except C4	−20		−55	−18		−55	mA
			Output C4	−20		−70	−18		−70	
I_{CC}	Supply current	V_{CC} = MAX, Outputs open	All B low, other inputs at 4.5 V		56			56		mA
			All inputs at 4.5 V		66	99		66	110	

† For conditions shown as MIN or MAX, use the appropriate value specified under recommended operating conditions.
‡ All typical values are at V_{CC} = 5 V, T_A = 25°C.
§ Only one output should be shorted at a time.

switching characteristics, V_{CC} = 5 V, T_A = 25°C

PARAMETER¶	FROM (INPUT)	TO (OUTPUT)	TEST CONDITIONS	MIN	TYP	MAX	UNIT
t_{PLH}	C0	Any Σ	C_L = 15 pF, R_L = 400 Ω, See Note 3		14	21	ns
t_{PHL}					12	21	
t_{PLH}	A_i or B_i	Σ_i			16	24	ns
t_{PHL}					16	24	
t_{PLH}	C0	C4	C_L = 15 pF, R_L = 780 Ω, See Note 3		9	14	ns
t_{PHL}					11	16	
t_{PLH}	A_i or B_i	C4			9	14	ns
t_{PHL}					11	16	

¶ t_{PLH} = propagation delay time, low-to-high-level output
t_{PHL} = propagation delay time, high-to-low-level output
NOTE 3: Load circuits and voltage waveforms are shown in Section 1.

recommended operating conditions

	SN54LS283			SN74LS283			UNIT
	MIN	NOM	MAX	MIN	NOM	MAX	
Supply voltage, V_{CC}	4.5	5	5.5	4.75	5	5.25	V
High-level output current, I_{OH}			−400			−400	μA
Low-level output current, I_{OL}			4			8	mA
Operating free-air temperature, T_A	−55		125	0		70	°C

electrical characteristics over recommended operating free-air temperature range (unless otherwise noted)

PARAMETER			TEST CONDITIONS†		SN54LS283			SN74LS283			UNIT
					MIN	TYP‡	MAX	MIN	TYP‡	MAX	
V_{IH}	High-level input voltage				2			2			V
V_{IL}	Low-level input voltage						0.7			0.8	V
V_{IK}	Input clamp voltage		V_{CC} = MIN, I_I = −18 mA				−1.5			−1.5	V
V_{OH}	High-level output voltage		V_{CC} = MIN, V_{IH} = 2 V, V_{IL} = V_{IL} max, I_{OH} = −400 μA		2.5	3.4		2.7	3.4		V
V_{OL}	Low-level output voltage		V_{CC} = MIN, V_{IH} = 2 V, V_{IL} = V_{IL} max	I_{OL} = 4 mA		0.25	0.4		0.25	0.4	V
				I_{OL} = 8 mA					0.35	0.5	
I_I	Input current at maximum input voltage	Any A or B	V_{CC} = MAX, V_I = 7 V				0.2			0.2	mA
		C0					0.1			0.1	
I_{IH}	High-level input current	Any A or B	V_{CC} = MAX, V_I = 2.7 V				40			40	μA
		C0					20			20	
I_{IL}	Low-level input current	Any A or B	V_{CC} = MAX, V_I = 0.4 V				−0.8			−0.8	mA
		C0					−0.4			−0.4	
I_{OS}	Short-circuit output current§		V_{CC} = MAX		−20		−100	−20		−100	mA
I_{CC}	Supply current		V_{CC} = MAX, Outputs open	All inputs grounded		22	39		22	39	mA
				All B low, other inputs at 4.5 V		19	34		19	34	
				All inputs at 4.5 V		19	34		19	34	

†For conditions shown as MIN or MAX, use the appropriate value specified under recommended operating conditions.
‡All typical values are at V_{CC} = 5 V, T_A = 25°C.
§Only one output should be shorted at a time and duration of the short-circuit should not exceed one second.

switching characteristics, V_{CC} = 5 V, T_A = 25°C

PARAMETER¶	FROM (INPUT)	TO (OUTPUT)	TEST CONDITIONS	MIN	TYP	MAX	UNIT
t_{PLH}	C0	Any Σ	C_L = 15 pF, R_L = 2 kΩ, See Note 3		16	24	ns
t_{PHL}					15	24	
t_{PLH}	A_i or B_i	Σ_i			15	24	ns
t_{PHL}					15	24	
t_{PLH}	C0	C4			11	17	ns
t_{PHL}					11	22	
t_{PLH}	A_i or B_i	C4			11	17	ns
t_{PHL}					12	17	

¶t_{PLH} = propagation delay time, low-to-high-level output
t_{PHL} = propagation delay time, high-to-low-level output
NOTE 3: Load circuits and voltage waveforms are shown in Section 1.

TEXAS INSTRUMENTS
POST OFFICE BOX 655012 • DALLAS, TEXAS 75265

recommended operating conditions

		SN54S283			SN74S283			UNIT
		MIN	NOM	MAX	MIN	NOM	MAX	
Supply voltage, V_{CC}		4.5	5	5.5	4.75	5	5.25	V
High-level output current, I_{OH}	Any output except C4			−1			−1	mA
	Output C4			−500			−[illegible]	μA
Low-level output current, I_{OL}	Any output except C4			20			20	mA
	Output C4			10			10	
Operating free-air temperature, T_A		−55		125	0		70	°C

electrical characteristics over recommended operating free-air temperature range (unless otherwise noted)

PARAMETER			TEST CONDITIONS†		MIN	TYP‡	MAX	UNIT
V_{IH}	High-level input voltage				2			V
V_{IL}	Low-level input voltage						0.8	V
V_{IK}	Input clamp voltage		V_{CC} = [illegible],	I_I = −18 mA			−1.2	V
V_{OH}	High-level output voltage	SN54S283	V_{CC} = [illegible],	V_{IH} = 2 V,	2.5	3.4		V
		SN74S283	V_{IL} = 0.8 V,	I_{OH} = MAX	2.7	3.4		
V_{OL}	Low-level output voltage		V_{CC} = MIN, V_{IL} = 0.8 V,	V_{IH} = 2 V, I_{OL} = MAX			0.5	V
I_I	Input current at maximum input voltage		V_{CC} = MAX,	V_I = 5.5 V			1	mA
I_{IH}	High-level input current		V_{CC} = MAX,	V_I = 2.7 V			50	μA
I_{IL}	Low-level input current		V_{CC} = MAX,	V_I = 0.5 V			−2	mA
I_{OS}	Short-circuit output current§	Any output except C4	V_{CC} = MAX		−40		−100	mA
		Output C4			−20		−100	
I_{CC}	Supply current		V_{CC} = MAX, Outputs open	All B low, other inputs at 4.5 V		80		mA
				All inputs at 4.5 V		95	160	

†For conditions shown as MIN or MAX, use the appropriate value specified under recommended operating conditions for the applicable device type.

‡All typical values are at V_{CC} = 5 V, T_A = 25°C.

§Only one output should be shorted at a time, and duration of the short-circuit should not exceed one second.

switching characteristics, V_{CC} = 5 V, T_A = 25°C

PARAMETER¶	FROM (INPUT)	TO (OUTPUT)	TEST CONDITIONS	MIN	TYP	MAX	UNIT
t_{PLH}	C0	Any Σ	C_L = 15 pF, R_L = 280 Ω, See Note 3		11	18	ns
t_{PHL}					12	18	
t_{PLH}	A_i or B_i	Σ_i			12	18	ns
t_{PHL}					11.5	18	
t_{PLH}	C0	C4	C_L = 15 pF, R_L = 560 Ω, See Note 3		6	11	ns
t_{PHL}					7.5	11	
t_{PLH}	A_i or B_i	C4			7.5	12	ns
t_{PHL}					8.5	12	

¶t_{PLH} = propagation delay time, low-to-high-level output
t_{PHL} = propagation delay time, high-to-low-level output
NOTE 3: Load circuits and voltage waveforms are shown in Section 1.

MAY 1972 – REVISED 1988

- Fast Multiplication of Two Binary Numbers
  8-Bit Product in 40 ns Typical
- Expandable for N-Bit-by-n-Bit Applications:
  16-Bit Product in 70 ns Typical
  32-Bit Product in 103 ns Typical
- Fully Compatible with Most TTL Circuits
- Diode-Clamped Inputs Simplify System Design

description

These high-speed TTL circuits are designed to be used in high-performance parallel multiplication applications. When connected as shown in Figure A, these circuits perform the positive-logic multiplication of two 4-bit binary words. The eight-bit binary product is generated with typically only 40 nanoseconds delay.

This basic four-by-four multiplier can be utilized as a fundamental building block for implementing larger multipliers. For example, the four-by-four building blocks can be connected as shown in Figure B to generate submultiple partial products. These results can then be summed in a Wallace tree, and, as illustrated, will produce a 16-bit product for the two eight-bit words typically in 70 nanoseconds. SN54H183/SN74H183 carry-save adders and SN54S181/SN74S181 arithmetic logic units with the SN54S182/SN74S182 look-ahead generator are used to achieve this high performance. The scheme is expandable for implementing N × M bit multipliers.

The SN54284 and SN54285 are characterized for operation over the full military temperature range of −55°C to 125°C; the SN74284 and SN74285 are characterized for operation from 0°C to 70°C.

SN54284 . . . J OR W PACKAGE
SN74284 . . . N PACKAGE
(TOP VIEW)

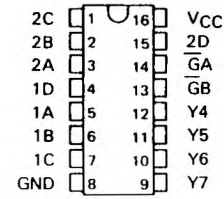

SN54285 . . . J OR W PACKAGE
SN74285 . . . N PACKAGE
(TOP VIEW)

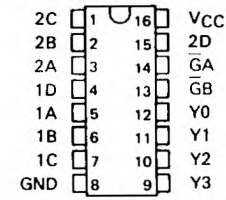

logic symbols†

'284

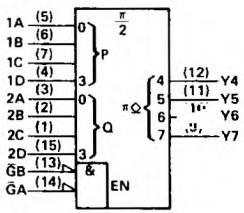

'285

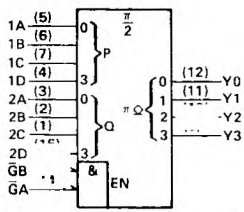

†These symbols are in accordance with ANSI/IEEE Std. 91-1984 and IEC Publication 617-12

PRODUCTION DATA documents contain information current as of publication date. Products conform to specifications per the terms of Texas Instruments standard warranty. Production processing does not necessarily include testing of all parameters.

schematics

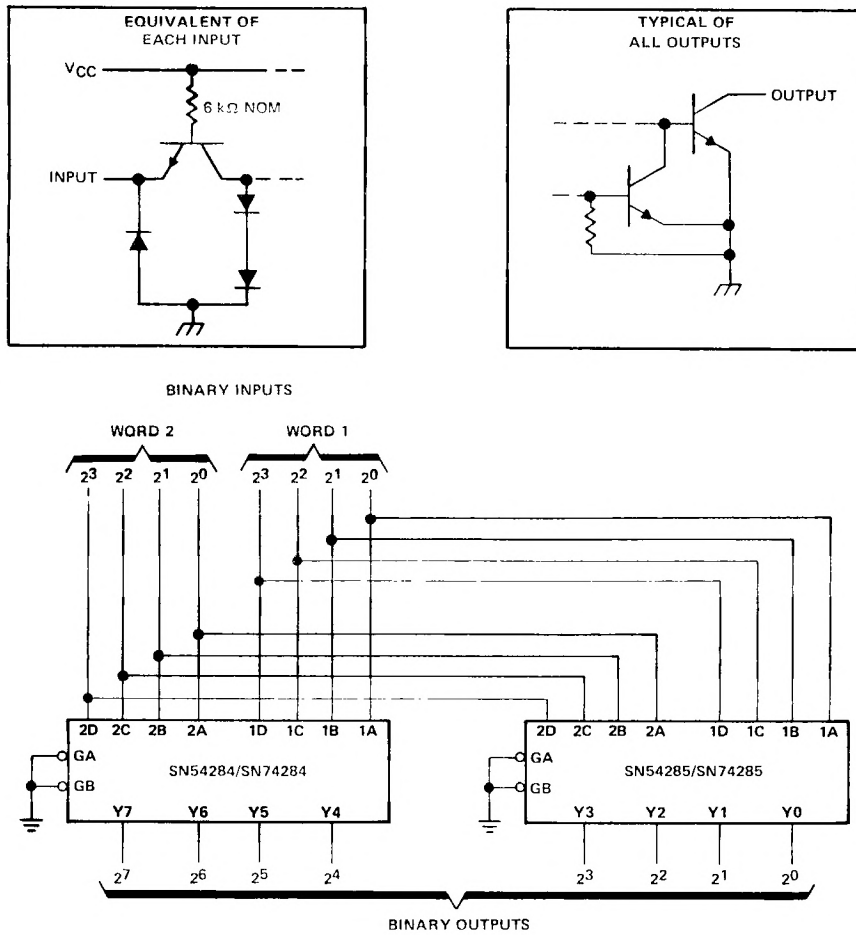

FIGURE A–4 X 4 MULTIPLIER

TEXAS INSTRUMENTS
POST OFFICE BOX 655012 • DALLAS, TEXAS 75265

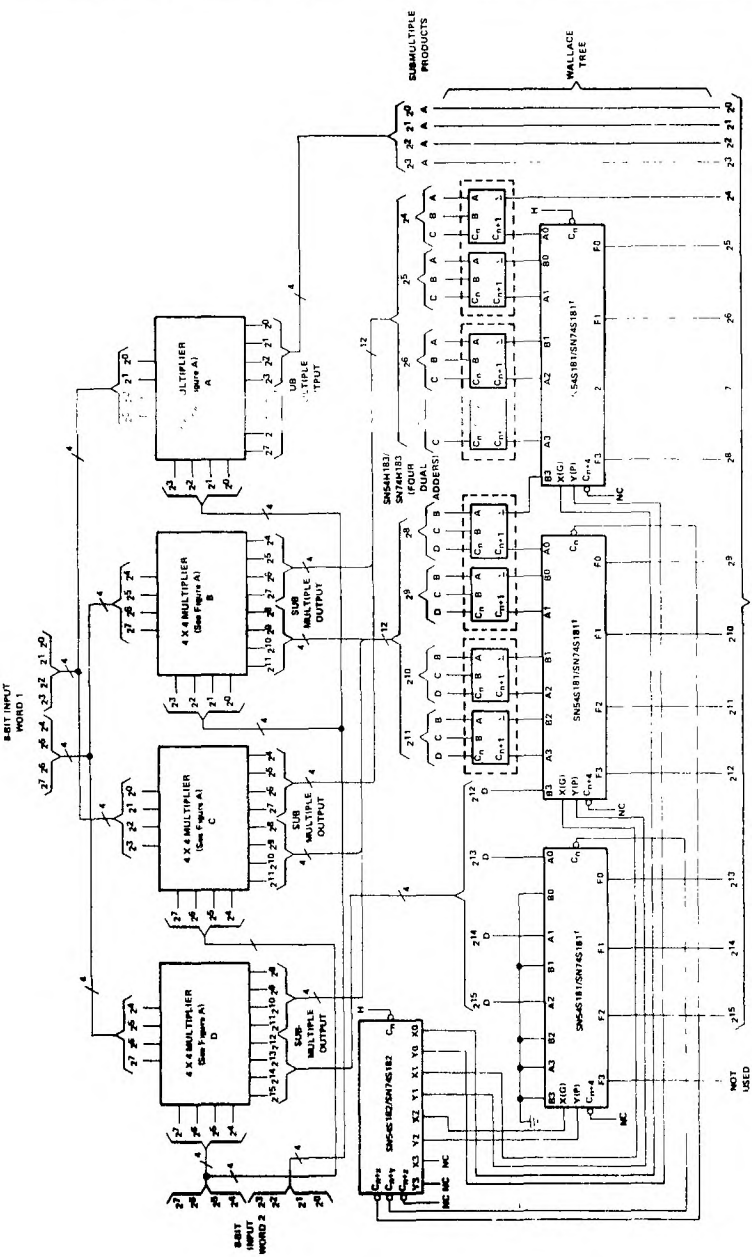

FIGURE 8–8 X 8 MULTIPLIER

†Other terminals of the three SN54S181/SN74S181 ALU's are connected as follows: S3 = H, S2 = L, S1 = L, S0 = H, M = L. Output A = B is not used for this application.

absolute maximum ratings over operating free-air temperature range (unless otherwise noted)

Supply voltage, V_{CC} (see Note 1) . . . . . 7 V
Input voltage . . . . . 5.5 V
Operating free-air temperature range: SN54' Circuits . . . . . −55°C to 125°C
SN74' Circuits . . . . . 0°C to 70°C
Storage temperature range . . . . . −65°C to 150°C

NOTE 1: Voltage values are with respect to network ground terminal.

recommended operating conditions

	SN54284 SN54285			SN74284 SN74285			UNIT
	MIN	NOM	MAX	MIN	NOM	MAX	
Supply voltage, V_{CC}	4.5	5	5.5	4.75	5	5.25	V
High-level output voltage, V_{OH}			5.5			5.5	V
Low-level output current, I_{OL}			16			16	mA
Operating free-air temperature, T_A	−55		125	0		70	°C

electrical characteristics over recommended operating free-air temperature range (unless otherwise noted)

PARAMETER		TEST CONDITIONS†		MIN	TYP‡	MAX	UNIT
V_{IH}	High-level input voltage			2			V
V_{IL}	Low-level input voltage					0.8	V
V_I	Input clamp voltage	V_{CC} = MIN,	I_I = −12 mA			−1.5	V
I_{OH}	High-level output current	V_{CC} = MIN, V_{IH} = 2 V, V_{IL} = 0.8 V,	V_{OH} = 5.5 V			40	μA
V_{OL}	Low-level output voltage	V_{CC} = MIN, V_{IH} = 2 V, V_{IL} = 0.8 V	I_{OL} = 12 mA			0.4	V
			I_{OL} = 16 mA			0.45	
I_I	Input current at maximum input voltage	V_{CC} = MAX,	V_I = 5.5 V			1	mA
I_{IH}	High-level input current	V_{CC} = MAX,	V_I = 2.4 V			40	μA
I_{IL}	Low-level input current	V_{CC} = MAX,	V_I = 0.4 V			−1	mA
I_{CC}	Supply current	V_{CC} = MAX, T_A = 125°C, See Note 2	SN54284, SN54285 N package only			99	mA
		V_{CC} = MAX, See Note 2			92	110	
					92	130	

†For conditions shown as MIN or MAX, use the appropriate value specified under recommended operating conditions for the applicable device type.
‡All typical values are at V_{CC} = 5 V, T_A = 25°C.
NOTE 2: With outputs open and both enable inputs grounded, I_{CC} is measured first by selecting an output product which contains three or more high-level bits, then by selecting an output product which contains four low-level bits.

switching characteristics, V_{CC} = 5 V, T_A = 25°C

PARAMETER		TEST CONDITIONS	MIN	TYP	MAX	UNIT
t_{PLH}	Propagation delay time, low-to-high-level output from enable	C_L = 30 pF to GND, R_{L1} = 300 Ω to V_{CC}, R_{L2} = 600 Ω to GND, See Note 3		20	30	ns
t_{PHL}	Propagation delay time, high-to-low-level output from enable			20	30	
t_{PLH}	Propagation delay time, low-to-high-level output from word inputs			40	60	ns
t_{PHL}	Propagation delay time, high-to-low-level output from word inputs			40	60	

NOTE 3: Load circuits and voltage waveforms are shown in Section 1.

TEXAS INSTRUMENTS
POST OFFICE BOX 655012 • DALLAS, TEXAS 75265

'290, 'LS290 . . . DECADE COUNTERS
'293, 'LS293 . . . 4-BIT BINARY COUNTERS

- GND and V_{CC} on Corner Pins (Pins 7 and 14 Respectively)

SN54290, SN54LS290, SN54293, SN54LS293 . . . J OR W PACKAGE
SN74290, SN74293 . . . N PACKAGE
SN74LS290, SN74LS293 . . . D OR N PACKAGE
(TOP VIEW)

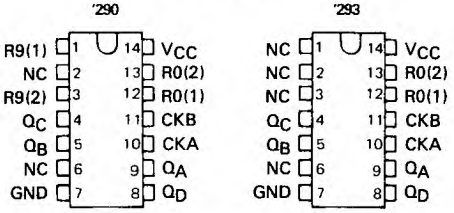

SN54LS290, SN54LS293 . . . FK PACKAGE
(TOP VIEW)

'LS290

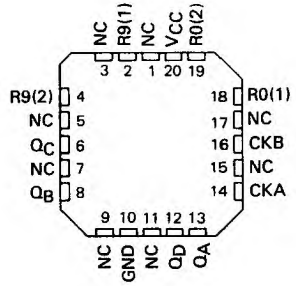

'LS293

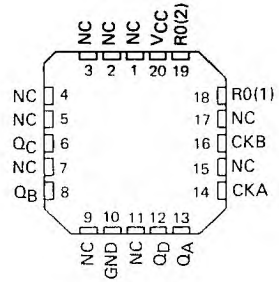

NC – No internal connection

description

The SN54290/SN74290, SN54LS290/SN74LS290, SN54293/SN74293, and SN54LS293/SN74LS293 counters are electrically and functionally identical to the SN5490A/SN7490A, SN54LS90/SN74LS90, SN5493A/SN7493A, and SN54LS93/SN74LS93, respectively. Only the arrangement of the terminals has been changed for the '290, 'LS290, '293, and 'LS293.

Each of these monolithic counters contains four master-slave flip-flops and additional gating to provide a divide-by-two counter and a three-stage binary counter for which the count cycle length is divide-by-five for the '290 and 'LS290 and divide-by-eight for the '293 and 'LS293.

All of these counters have a gated zero reset and the '290 and 'LS290 also have gated set-to-nine inputs for use in BCD nine's complement applications.

To use the maximum count length (decade or four-bit binary) of these counters, the B input is connected to the Q_A output. The input count pulses are applied to input A and the outputs are as described in the appropriate function table. A symmetrical divide-by-ten count can be obtained from the '290 and 'LS290 counters by connecting the Q_D output to the A input and applying the input count to the B input which gives a divide-by-ten square wave at output Q_A.

PRODUCTION DATA documents contain information current as of publication date. Products conform to specifications per the terms of Texas Instruments standard warranty. Production processing does not necessarily include testing of all parameters.

logic symbols†

'290, 'LS290

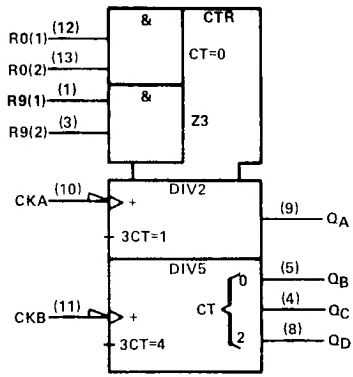

'293, 'LS293

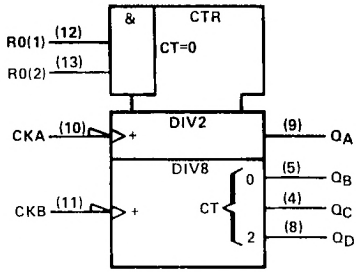

† These symbols are in accordance with ANSI/IEEE Std 91-1984 and IEC Publication 617-12.
Pin numbers shown are for D, J, N, and W packages.

TEXAS INSTRUMENTS
POST OFFICE BOX 655012 • DALLAS, TEXAS 75265

'290, 'LS290
BCD COUNT SEQUENCE
(See Note A)

COUNT	OUTPUT			
	Q_D	Q_C	Q_B	Q_A
0	L	L	L	L
1	L	L	L	H
2	L	L	H	L
3	L	L	H	H
4	L	H	L	L
5	L	H	L	H
6	L	H	H	L
7	L	H	H	H
8	H	L	L	L
9	H	L	L	H

'290, 'LS290
BI-QUINARY (5-2)
(See Note B)

COUNT	OUTPUT			
	Q_A	Q_D	Q_C	Q_B
0	L	L	L	L
1	L	L	L	H
2	L	L	H	L
3	L	L	H	H
4	L	H	L	L
5	H	L	L	L
6	H	L	L	H
7	H	L	H	L
8	H	L	H	H
9	H	H	L	L

'290, 'LS290
RESET/COUNT FUNCTION TABLE

RESET INPUTS				OUTPUT			
$R_{0(1)}$	$R_{0(2)}$	$R_{9(1)}$	$R_{9(2)}$	Q_D	Q_C	Q_B	Q_A
H	H	L	X	L	L	L	L
H	H	X	L	L	L	L	L
X	X	H	H	H	L	L	H
X	L	X	L	COUNT			
L	X	L	X	COUNT			
L	X	X	L	COUNT			
X	L	L	X	COUNT			

'293, 'LS293
RESET/COUNT FUNCTION TABLE

RESET INPUTS		OUTPUT			
$R_{0(1)}$	$R_{0(2)}$	Q_D	Q_C	Q_B	Q_A
H	H	L	L	L	L
L	X	COUNT			
X	L	COUNT			

'293, 'LS293
COUNT SEQUENCE
(See Note C)

COUNT	OUTPUT			
	Q_D	Q_C	Q_B	Q_A
0	L	L	L	L
1	L	L	L	H
2	L	L	H	L
3	L	L	H	H
4	L	H	L	L
5	L	H	L	H
6	L	H	H	L
7	L	H	H	H
8	H	L	L	L
9	H	L	L	H
10	H	L	H	L
11	H	L	H	H
12	H	H	L	L
13	H	H	L	H
14	H	H	H	L
15	H	H	H	H

NOTES: A. Output Q_A is connected to input B for BCD count.
B. Output Q_D is connected to input A for bi-quinary count.
C. Output Q_A is connected to input B.
D. H = high level, L = low level, X = irrelevant

logic diagrams (positive logic)

'290, 'LS290

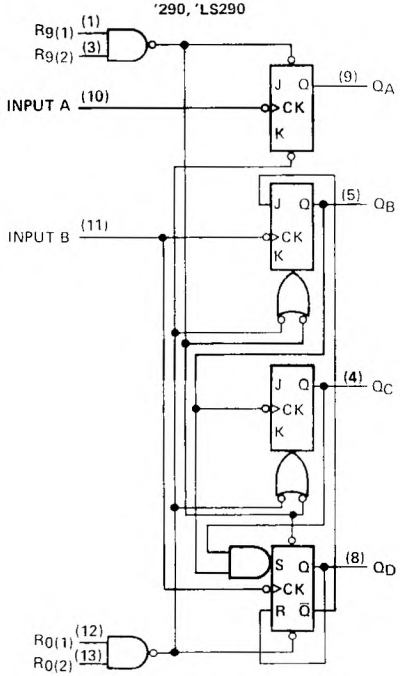

'293, 'LS293

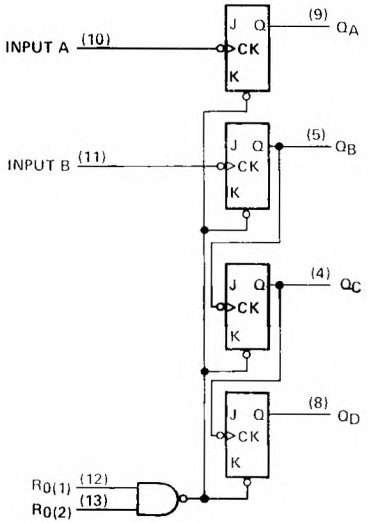

Pin numbers shown are for D, J, N, and W packages.
The J and K inputs shown without connection are for reference only and are functionally at a high level.

schematics of inputs and outputs

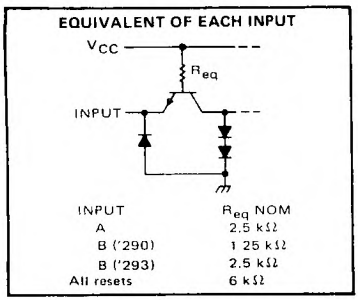

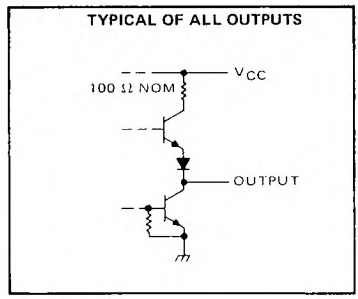

absolute maximum ratings over operating free-air temperature range (unless otherwise noted)

Supply voltage, V_{CC} (see Note 1) . . . . . 7 V
Input voltage . . . . . 5.5 V
Interemitter voltage (see Note 2) . . . . . 5.5 V
Operating free-air temperature range: SN54' Circuits . . . . . −55°C to 125°C
SN74' Circuits . . . . . 0°C to 70°C
Storage temperature range . . . . . −65°C to 150°C

NOTES: 1. Voltage values, except interemitter voltage, are with respect to network ground terminal.
2. This is the voltage between two emitters of a multiple-emitter transistor. For these circuits, this rating applies between the two R_0 inputs, and for the '290 circuit, it also applies between the two R9 inputs.

recommended operating conditions

		SN54'			SN74'			UNIT
		MIN	NOM	MAX	MIN	NOM	MAX	
Supply voltage, V_{CC}		4.5	5	5.5	4.75	5	5.25	V
High-level output current, I_{OH}				−800			−800	μA
Low-level output current, I_{OL}				16			16	mA
Count frequency, f_{count}	A input	0		32	0		32	MHz
	B input	0		16	0		16	
Pulse width, t_w	A input	15			15			ns
	B input	30			30			
	Reset inputs	15			15			
Reset inactive-state setup time, t_{su}		25			25			ns
Operating free-air temperature, T_A		−55		125	0		70	°C

TEXAS INSTRUMENTS
POST OFFICE BOX 655012 • DALLAS, TEXAS 75265

electrical characteristics over recommended operating free-air temperature range (unless otherwise noted)

PARAMETER			TEST CONDITIONS†		'290			'293			UNIT
					MIN	TYP‡	MAX	MIN	TYP‡	MAX	
V_{IH}	High-level input voltage				2			2			V
V_{IL}	Low-level input voltage						0.8			0.8	V
V_{IK}	Input clamp voltage		V_{CC} = MIN, I_I = −12 mA				−1.5			−1.5	V
V_{OH}	High-level output voltage		V_{CC} = MIN, V_{IH} = 2 V, V_{IL} = 0.8 V, I_{OH} = −800 μA		2.4	3.4		2.4	3.4		V
V_{OL}	Low-level output voltage		V_{CC} = MIN, V_{IH} = 2 V, V_{IL} = 0.8 V, I_{OL} = 16 mA¶			0.2	0.4		0.2	0.4	V
I_I	Input current at maximum input voltage		V_{CC} = MAX, V_I = 5.5 V				1			1	mA
I_{IH}	High-level input current	Any	V_{CC} = MAX, V_I = 2.4 V				40			40	μA
		A input					80			80	
		B input					120			80	
I_{IL}	Low-level input current	Any	V_{CC} = MAX, V_I = 0.4 V				−1.6			−1.6	mA
		A input					−3.2			−3.2	
		B input					−4.8			−3.2	
I_{OS}	Short-circuit output current§		V_{CC} = MAX	SN54'	−20		−57	−20		−57	mA
				SN74'	−18		−57	−18		−57	
I_{CC}	Supply current		V_{CC} = MAX, See Note 3			29	42		26	39	mA

†For conditions shown as MIN or MAX, use the appropriate value specified under recommended operating conditions.
‡All typical values are at V_{CC} = 5 V, T_A = 25°C.
§Not more than one output should be shorted at a time.
¶Q_A outputs are tested at I_{OL} = 16 mA plus the limit value of I_{IL} for the B input. This permits driving the B input while maintaining full fan-out capability.
NOTE 3: I_{CC} is measured with all outputs open, both R_0 inputs grounded following momentary connection to 4.5 V, and all other inputs grounded.

switching characteristics, V_{CC} = 5 V, T_A = 25°C

PARAMETER#	FROM (INPUT)	TO (OUTPUT)	TEST CONDITIONS	'290			'293			UNIT
				MIN	TYP	MAX	MIN	TYP	MAX	
f_{max}	A	Q_A	C_L = 15 pF, R_L = 400 Ω, See Note 4	32	42		32	42		MHz
	B	Q_B		16			16			
t_{PLH}	A	Q_A			10	16		10	16	ns
t_{PHL}					12	18		12	18	
t_{PLH}	A	Q_D			32	48		46	70	ns
t_{PHL}					34	50		46	70	
t_{PLH}	B	Q_B			10	16		10	16	ns
t_{PHL}					14	21		14	21	
t_{PLH}	B	Q_C			21	32		21	32	ns
t_{PHL}					23	35		23	35	
t_{PLH}	B	Q_D			21	32		34	51	ns
t_{PHL}					23	35		34	51	
t_{PHL}	Set-to-0	Any			26	40		26	40	ns
t_{PLH}	Set-to-9	Q_A, Q_D			20	30				ns
t_{PHL}		Q_B, Q_C			26	40				

#f_{max} = maximum count frequency
t_{PLH} = propagation delay time, low-to-high-level output
t_{PHL} = propagation delay time, high-to-low-level output
NOTE 4: Load circuits and voltage waveforms are shown in Section 1.

schematics of inputs and outputs

EQUIVALENT OF EACH RESET INPUT

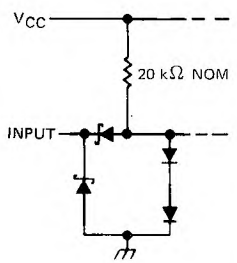

EQUIVALENT OF A AND B INPUTS

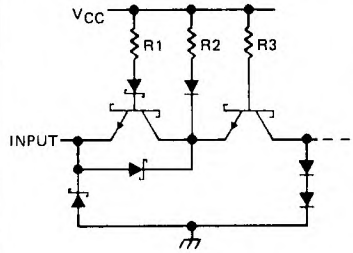

NOMINAL VALUES

INPUT	R1	R2	R3
A	10 kΩ	10 kΩ	10 kΩ
B ('LS290)	6.7 kΩ	6.7 kΩ	5 kΩ
B ('LS293)	15 kΩ	15 kΩ	10 kΩ

TYPICAL OF ALL OUTPUTS

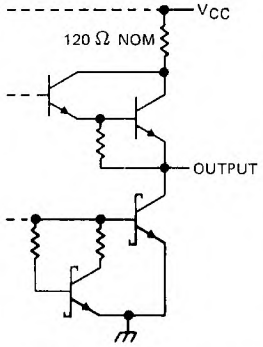

absolute maximum ratings over operating free-air temperature range (unless otherwise noted)

Supply voltage, V_{CC} (see Note 5) . . . . . 7 V
Input voltage: R inputs . . . . . 7 V
A and B inputs . . . . . 5.5 V
Operating free-air temperature range: SN54LS290, SN54LS293 . . . . . −55°C to 125°C
SN74LS290, SN74LS293 . . . . . 0°C to 70°C
Storage temperature range . . . . . −65°C to 150°C

NOTE 5: Voltage values are with respect to network ground terminal.

recommended operating conditions

		SN54LS'			SN74LS'			UNIT
		MIN	NOM	MAX	MIN	NOM	MAX	
Supply voltage, V_{CC}		4.5	5	5.5	4.75	5	5.25	V
High-level output current, I_{OH}				−400			−400	μA
Low-level output current, I_{OL}				4			8	mA
Count frequency, f_{count}	A input	0		32	0		32	MHz
	B input	0		16	0		16	
Pulse width, t_w	A input	15			15			ns
	B input	30			30			
	Reset inputs	30			30			
Reset inactive-state setup time, t_{su}		25			25			ns
Operating free-air temperature, T_A		−55		125	0		70	°C

TEXAS INSTRUMENTS
POST OFFICE BOX 655012 • DALLAS, TEXAS 75265

electrical characteristics over recommended operating free-air temperature range (unless otherwise noted)

PARAMETER		TEST CONDITIONS†			SN54LS'			SN74LS'			UNIT
					MIN	TYP‡	MAX	MIN	TYP‡	MAX	
V_{IH}	High-level input voltage				2			2			V
V_{IL}	Low-level input voltage						0.7			0.8	V
V_{IK}	Input clamp voltage	V_{CC} = MIN,	I_I = −18 mA				−1.5			−1.5	V
V_{OH}	High-level output voltage	V_{CC} = MIN, V_{IL} = V_{IL} max,	V_{IH} = 2 V, I_{OH} = −400 μA		2.5	3.4		2.7	3.4		V
V_{OL}	Low-level output voltage	V_{CC} = MIN, V_{IL} = V_{IL} max	V_{IH} = 2 V,	I_{OL} = 4 mA¶		0.25	0.4		0.25	0.4	V
				I_{OL} = 8 mA¶					0.35	0.5	
I_I	Input current at maximum input voltage	Any reset	V_{CC} = MAX,	V_I = 7 V			0.1			0.1	mA
		A input	V_{CC} = MAX,	V_I = 5.5 V			0.2			0.2	
		B of 'LS290					0.4			0.4	
		B of 'LS293					0.2			0.2	
I_{IH}	High-level input current	Any reset	V_{CC} = MAX,	V_I = 2.7 V			20			20	μA
		A input					40			40	
		B of 'LS290					80			80	
		B of 'LS293					40			40	
I_{IL}	Low-level input current	Any reset	V_{CC} = MAX,	V_I = 0.4 V			−0.4			−0.4	mA
		A input					−2.4			−2.4	
		B of 'LS290					−3.2			−3.2	
		B of 'LS293					−1.6			−1.6	
I_{OS}	Short-circuit output current§	V_{CC} = MAX			−20		−100	−20		−100	mA
I_{CC}	Supply current	V_{CC} = MAX,	See Note 3	'LS290		9	15		9	15	mA
				'LS293		9	15		9	15	

†For conditions shown as MIN or MAX, use the appropriate value specified under recommended operating conditions.
‡All typical values are at V_{CC} = 5 V, T_A = 25°C.
§Not more than one output should be shorted at a time, and duration of the short-circuit should not exceed one second.
¶Q_A outputs are tested at specified I_{OL} plus the limit value of I_{IL} for the B input. This permits driving the B input while maintaining full fan-out capability.
NOTE 3: I_{CC} is measured with all outputs open, both R_0 inputs grounded following momentary connection to 4.5 V, and all other inputs grounded.

switching characteristics, V_{CC} = 5 V, T_A = 25°C

PARAMETER#	FROM (INPUT)	TO (OUTPUT)	TEST CONDITIONS	'LS290			'LS293			UNIT
				MIN	TYP	MAX	MIN	TYP	MAX	
f_{max}	A	Q_A	C_L = 15 pF, R_L = 2 kΩ, See Note 4	32	42		32	42		MHz
	B	Q_B		16			16			
t_{PLH}	A	Q_A			10	16		10	16	ns
t_{PHL}					12	18		12	18	
t_{PLH}	A	Q_D			32	48		46	70	ns
t_{PHL}					34	50		46	70	
t_{PLH}	B	Q_B			10	16		10	16	ns
t_{PHL}					14	21		14	21	
t_{PLH}	B	Q_C			21	32		21	32	ns
t_{PHL}					23	35		23	35	
t_{PLH}	B	Q_D			21	32		34	51	ns
t_{PHL}					23	35		34	51	
t_{PHL}	Set-to-0	Any			26	40		26	40	ns
t_{PLH}	Set-to-9	Q_A, Q_D			20	30				ns
t_{PHL}		Q_B, Q_C			26	40				

#f_{max} = maximum count frequency
t_{PLH} = propagation delay time, low-to-high-level output
t_{PHL} = propagation delay time, high-to-low-level output
NOTE 4 Load circuits and voltage waveforms are shown in Section 1.

D2628, JANUARY 1981 – REVISED MARCH 1988

- **Count Divider Chain**
- **Digitally Programmable from 2^2 to 2^n (n = 31 for 'LS292, n = 15 for 'LS294)**
- **Useable Frequency Range from DC to 30 MHz**
- **Easily Expandable**
- **Applications**
  - **Frequency Division**
  - **Digital Timing**

description

These programmable frequency dividers/digital timers contain 31 flip-flops plus 30 gates ('LS292) or 15 flip-flops plus 29 gates ('LS294) on a single chip. The count modulo is under digital control of the inputs provided.

Both types feature an active-low clear input to initialize the state of all flip-flops. To facilitate incoming inspection, test points are provided (TP1, TP2, and TP3 on the 'LS292 and TP on the 'LS294). These test points are not intended to drive system loads. Both types feature two clock inputs; either one may be used for clock gating. (See the function table below.)

A brief look at the digital timing capabilities of the 'LS292 will show that with a 1-MHz input frequency, programming for 2^{10} will give a period of 1.024 ms, and 2^{20} will give a period of 1.05 sec, 2^{26} will give a period of 1.12 min, and 2^{31} will give a period of 35.79 min.

These devices are easily cascadable giving limitless possibilities to timing delays that can be achieved.

FUNCTION TABLE

CLEAR	CLK 1	CLK 2	Q OUTPUT MODE
L	X	X	Cleared to L
H	↓	L	Count
H	L	↓	Count
H	H	X	Inhibit
H	X	H	Inhibit

SN54LS292 . . . J OR W PACKAGE
SN74LS292 . . . N PACKAGE
(TOP VIEW)

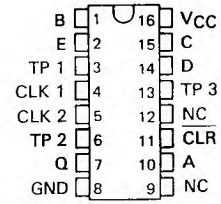

SN54LS292 . . . FK PACKAGE
(TOP VIEW)

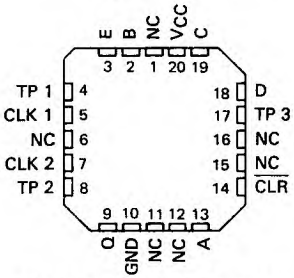

SN54LS294 . . . J OR W PACKAGE
SN74LS294 . . . N PACKAGE
(TOP VIEW)

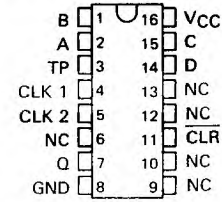

SN54LS294 . . . FK PACKAGE
(TOP VIEW)

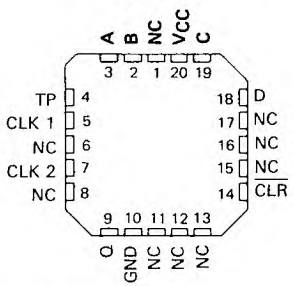

NC – No internal connection.

PRODUCTION DATA documents contain information current as of publication date. Products conform to specifications per the terms of Texas Instruments standard warranty. Production processing does not necessarily include testing of all parameters.

schematics of inputs and outputs

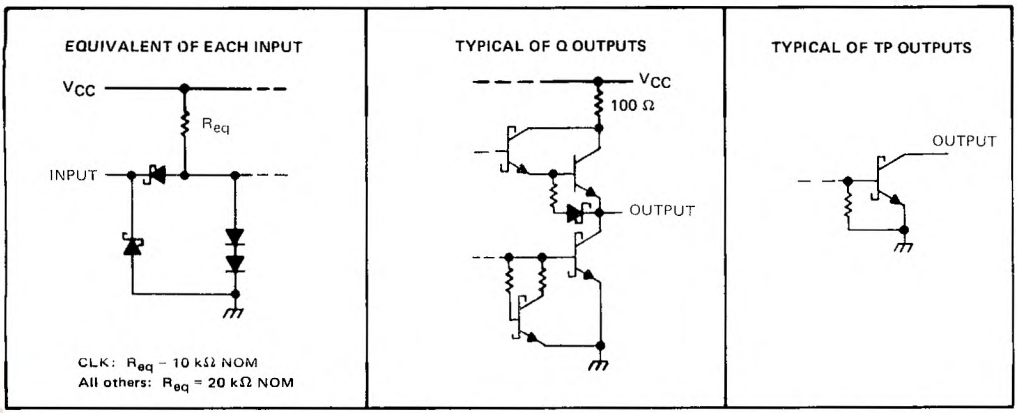

operation

The functional block diagram shows that the count modulo is controlled by an X/Y decoder connected to the mode control inputs of several flip-flops. These flip flops with mode controls each have a "D" input connected to the parallel clock line and a "T" input driven by the preceding stage. The parallel clock frequency is always the input frequency divided by four.

The X/Y decoder output selected by the programming inputs goes low. While a mode control is low, the "D" input of that flip-flop is enabled, and the signal from the parallel clock line ($f_{in} \div 4$) is passed to the "T" input of the following stage. All the other mode controls are high enabling the "T" inputs and causing each flip-flop in turn to divide by two.

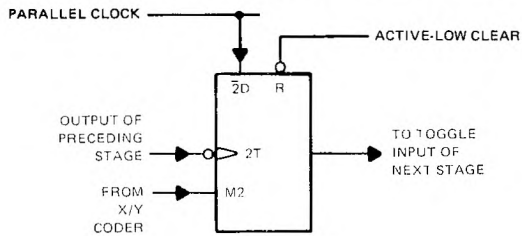

logic symbols†

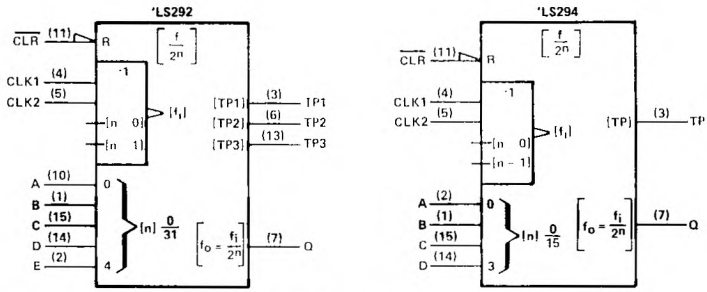

†These symbols are in accordance with ANSI/IEEE Std 91-1984 and IEC Publication 617-12.
Pin numbers shown are for J, N, and W packages.

TEXAS INSTRUMENTS
POST OFFICE BOX 655012 • DALLAS, TEXAS 75265

logic diagram (positive logic)

'LS292

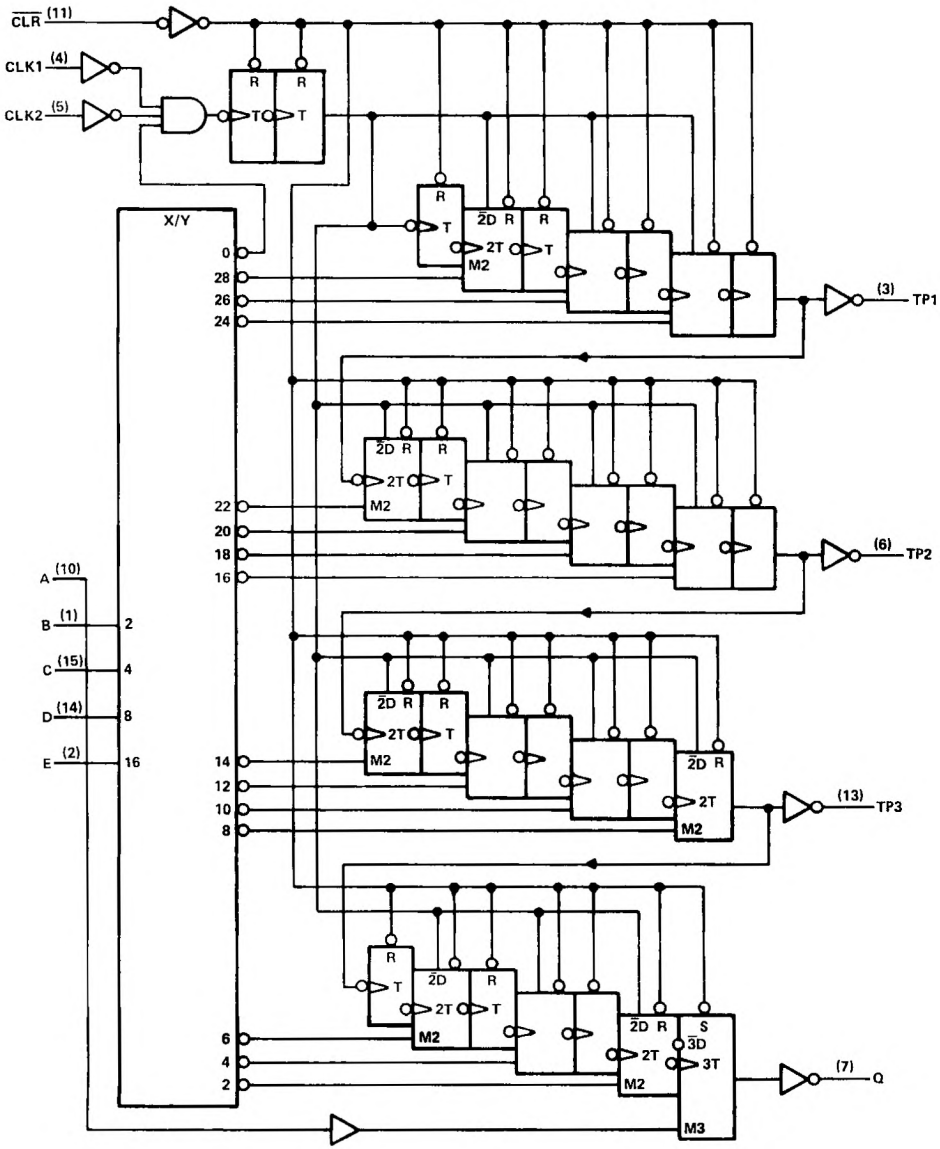

Pin numbers shown are for J, N, and W packages.

logic diagram (positive logic)

'LS294

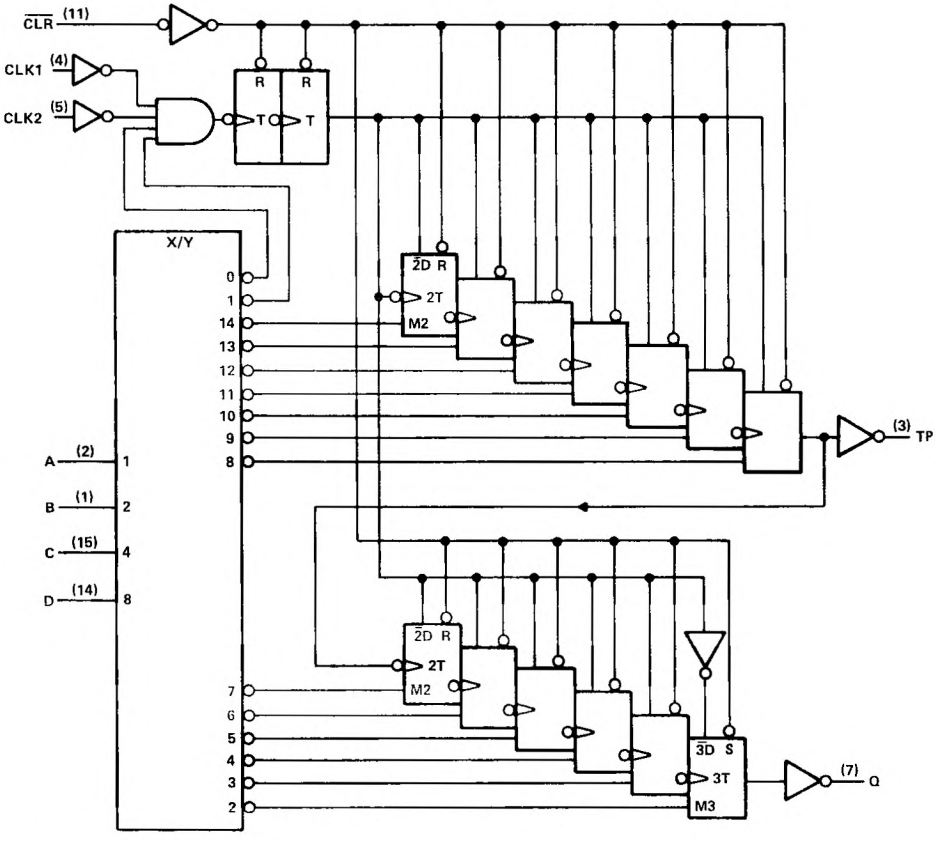

Pin numbers shown are for J, N, and W packages.

absolute maximum ratings over operating free-air temperature range (unless otherwise noted)

Supply voltage, V_{CC} (see Note 1)		7 V
Input voltage		7 V
Operating free-air temperature range:	SN54LS292, SN54LS294	−55°C to 125°C
	SN74LS292, SN74LS294	0°C to 70°C
Storage temperature range		−65°C to 150°C

NOTE 1: Voltage values are with respect to network ground terminal.

TEXAS INSTRUMENTS
POST OFFICE BOX 655012 • DALLAS, TEXAS 75265

recommended operating conditions

			SN54LS'			SN74LS'			UNIT
			MIN	NOM	MAX	MIN	NOM	MAX	
V_{CC}	Supply voltage		4.5	5	5.5	4.75	5	5.25	V
V_{IH}	High-level input voltage		2			2			V
V_{IL}	Low-level input voltage				0.7			0.8	V
I_{OH}	High-level output current (Q only)				−1.2			−1.2	mA
I_{OL}	Low-level output current (Q only)				12			24	mA
f_{clock}	Clock frequency		0		30	0		30	MHz
t_w	Duration of clock input pulse		16			16			ns
t_w	Duration of clear pulse	'LS292	55			55			ns
		'LS294	35			35			
t_{su}	Clear inactive-state setup time		15			15			ns
T_A	Operating free-air temperature		−55		125	0		70	°C

electrical characteristics over recommended operating free-air temperature range (unless otherwise noted)

PARAMETER		TEST CONDITIONS†		SN54LS'			SN74LS'			UNIT
				MIN	TYP‡	MAX	MIN	TYP‡	MAX	
V_{IK}		V_{CC} = MIN, I_I = −18 mA				−1.5			−1.5	V
V_{OH}	Q	V_{CC} = MIN, V_{IH} = 2 V, V_{IL} = MAX	I_{OH} = −1.2 mA,	2.4	3.4		2.4	3.4		V
V_{OL}	Q	V_{CC} = MIN, V_{IH} = 2 V, V_{IL} = MAX	I_{OL} = 12 mA		0.25	0.4		0.25	0.4	V
			I_{OL} = 24 mA					0.35	0.5	
	TP¶		I_{OL} = 0.5 mA					0.25	0.4	
I_I		V_{CC} = MAX, V_I = 7 V				0.1			0.1	mA
I_{IH}		V_{CC} = MAX, V_I = 2.7 V				20			20	μA
I_{IL}	CLK1, CLK2	V_{CC} = MAX, V_I = 0.4 V				−0.8			−0.8	mA
	All others					−0.4			−0.4	
I_{OS}§	Q	V_{CC} = MAX		−30		−130	−30		−130	mA
I_{CC}	'LS292	V_{CC} = MAX, All inputs grounded, All outputs open			40	75		40	75	mA
	'LS294				30	50		30	50	

† For conditions shown as MIN or MAX, use the appropriate value specified under recommended operating conditions.
‡ All typical values are at V_{CC} = 5 V, T_A = 25°C.
§ The duration of the short-circuit should not exceed one second.
¶ The TP output or outputs are not intended to drive external loads but are solely provided for test points.

switching characteristics, V_{CC} = 5 V, T_A = 25°C, R_L = 667 Ω, C_L = 45 pF (see Figure 1)

PARAMETER†	FROM (INPUT)	TO (OUTPUT)	TEST CONDITIONS	'LS292			'LS294			UNIT
				MIN	TYP	MAX	MIN	TYP	MAX	
f_{max}	CLK1 or 2			30	50		30	50		MHz
t_{PLH}	CLK1 or 2	Q	Modulo set at 22, A thru E = LLLHL ('LS292) A thru D = LLHL ('LS294)		55	90		55	90	ns
t_{PHL}	CLK1 or 2	Q	Modulo set at 22, A thru E = LLLHL ('LS292) A thru D = LLHL ('LS294)		80	120		80	120	ns
t_{PHL}	$\overline{CLR}$	Q			85	130		35	65	ns

†f_{MAX} = maximum clock frequency
t_{PLH} = Propagation delay time, low-to-high-level output
t_{PHL} = Propagation delay time, high-to-low-level output
NOTE 2: Load circuits and voltage waveforms are shown in Section 1. To be used on TP outputs only.

'LS292 FUNCTION TABLE

PROGRAMMING INPUTS					FREQUENCY DIVISION							
					Q		TP1		TP2		TP3	
E	D	C	B	A	BINARY	DECIMAL	BINARY	DECIMAL	BINARY	DECIMAL	BINARY	DECIMAL
L	L	L	L	L	Inhibit	Inhibit	Inhibit	Inhibit	Inhibit	Inhibit	Inhibit	Inhibit
L	L	L	L	H	Inhibit	Inhibit	Inhibit	Inhibit	Inhibit	Inhibit	Inhibit	Inhibit
L	L	L	H	L	2^2	4	2^9	512	2^{17}	131,072	2^{24}	16,777,216
L	L	L	H	H	2^3	8	2^9	512	2^{17}	131,072	2^{24}	16,777,216
L	L	H	L	L	2^4	16	2^9	512	2^{17}	131,072	2^{24}	16,777,216
L	L	H	L	H	2^5	32	2^9	512	2^{17}	131,072	2^{24}	16,777,216
L	L	H	H	L	2^6	64	2^9	512	2^{17}	131,072	2^{24}	16,777,216
L	L	H	H	H	2^7	128	2^9	512	2^{17}	131,072	2^{24}	16,777,216
L	H	L	L	L	2^8	256	2^9	512	2^{17}	131,072	2^2	4
L	H	L	L	H	2^9	512	2^9	512	2^{17}	131,072	2^2	4
L	H	L	H	L	2^{10}	1,024	2^9	512	2^{17}	131,072	2^4	16
L	H	L	H	H	2^{11}	2,048	2^9	512	2^{17}	131,072	2^4	16
L	H	H	L	L	2^{12}	4,096	2^9	512	2^{17}	131,072	2^6	64
L	H	H	L	H	2^{13}	8,192	2^9	512	2^{17}	131,072	2^6	64
L	H	H	H	L	2^{14}	16,384	2^9	512	Disabled Low		2^8	256
L	H	H	H	H	2^{15}	32,768	2^9	512	Disabled Low		2^8	256
H	L	L	L	L	2^{16}	65,536	2^9	512	2^3	8	2^{10}	1,024
H	L	L	L	H	2^{17}	131,072	2^9	512	2^3	8	2^{10}	1,024
H	L	L	H	L	2^{18}	262,144	2^9	512	2^5	32	2^{12}	4,096
H	L	L	H	H	2^{19}	524,288	2^9	512	2^5	32	2^{12}	4,096
H	L	H	L	L	2^{20}	1,048,576	2^9	512	2^7	128	2^{14}	16,384
H	L	H	L	H	2^{21}	2,097,152	2^9	512	2^7	128	2^{14}	16,384
H	L	H	H	L	2^{22}	4,194,304	Disabled Low		2^9	512	2^{16}	65,536
H	L	H	H	H	2^{23}	8,388,608	Disabled Low		2^9	512	2^{16}	65,536
H	H	L	L	L	2^{24}	16,777,216	2^3	8	2^{11}	2,048	2^{18}	262,144
H	H	L	L	H	2^{25}	33,554,432	2^3	8	2^{11}	2,048	2^{18}	262,144
H	H	L	H	L	2^{26}	67,108,864	2^5	32	2^{13}	8,192	2^{20}	1,048,576
H	H	L	H	H	2^{27}	134,217,728	2^5	32	2^{13}	8,192	2^{20}	1,048,576
H	H	H	L	L	2^{28}	268,435,456	2^7	128	2^{15}	32,768	2^{22}	4,194,304
H	H	H	L	H	2^{29}	536,870,912	2^7	128	2^{15}	32,768	2^{22}	4,194,304
H	H	H	H	L	2^{30}	1,073,741,824	2^9	512	2^{17}	131,072	2^{24}	16,777,216
H	H	H	H	H	2^{31}	2,147,483,648	2^9	512	2^{17}	131,072	2^{24}	16,777,216

TEXAS INSTRUMENTS
POST OFFICE BOX 655012 • DALLAS, TEXAS 75265

'LS294 FUNCTION TABLE

PROGRAMMING INPUTS				FREQUENCY DIVISION			
				Q		TP	
D	C	B	A	BINARY	DECIMAL	BINARY	DECIMAL
L	L	L	L	Inhibit	Inhibit	Inhibit	Inhibit
L	L	L	H	Inhibit	Inhibit	Inhibit	Inhibit
L	L	H	L	2^2	4	2^9	512
L	L	H	H	2^3	8	2^9	512
L	H	L	L	2^4	16	2^9	512
L	H	L	H	2^5	32	2^9	512
L	H	H	L	2^6	64	2^9	512
L	H	H	H	2^7	128	Disabled Low	
H	L	L	L	2^8	256	2^2	4
H	L	L	H	2^9	512	2^3	8
H	L	H	L	2^{10}	1,024	2^4	16
H	L	H	H	2^{11}	2,048	2^5	32
H	H	L	L	2^{12}	4,096	2^6	64
H	H	L	H	2^{13}	8,192	2^7	128
H	H	H	L	2^{14}	16,384	2^8	256
H	H	H	H	2^{15}	32,768	2^9	512

switching loads

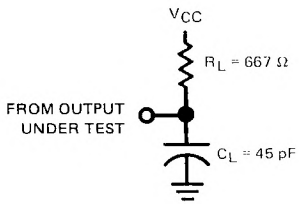

FIGURE 1

'LS292 and 'LS294 timing diagram

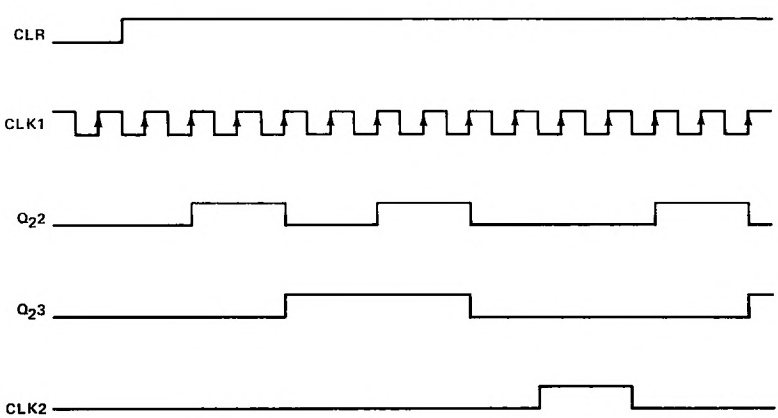

- **'LS295B Offers Three Times the Sink-Current Capability of 'LS295A**
- **Schottky-Diode-Clamped Transistors**
- **Low Power Dissipation . . . 80 mW Typical (Enabled)**
- **Applications:**
  - **N-Bit Serial-To-Parallel Converter**
  - **N-Bit Parallel-To-Serial Converter**
  - **N-Bit Storage Register**

SN54LS295B . . . J OR W PACKAGE
SN74LS295B . . . D OR N PACKAGE
(TOP VIEW)

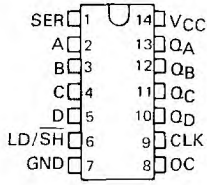

SN54LS295B . . . FK PACKAGE
(TOP VIEW)

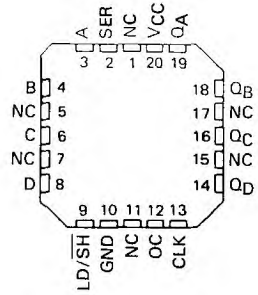

NC - No internal connection

description

These 4-bit registers feature parallel inputs, parallel outputs, and clock (CLK), serial (SER), mode (LD/$\overline{SH}$), and outputs control (OC) inputs. The registers have three modes of operation:

Parallel (broadside) load
Shift right (the direction Q_A toward Q_D)
Shift left (the direction Q_D toward Q_A)

Parallel loading is accomplished by applying the four bits of data and taking the mode control input high. The data is loaded into the associated flip-flops and appears at the outputs after the high-to-low transition of the clock input. During parallel loading, the entry of serial data is inhibited.

Shift right is accomplished when the mode control is low; shift left is accomplished when the mode control is high by connecting the output of each flip-flop to the parallel input of the previous flip-flop (Q_D to input C, etc.) and serial data is entered at input D.

When the output control is high, the normal logic levels of the four outputs are available for driving the loads or bus lines. The outputs are disabled independently from the level of the clock by a low logic level at the output control input. The outputs then present a high impedance and neither load nor drive the bus line; however, sequential operation of the registers is not affected.

The SN54LS295B is characterized for operation over the full military temperature range of −55°C to 125°C; the SN74LS295B is characterized for operation from 0°C to 70°C.

logic symbol†

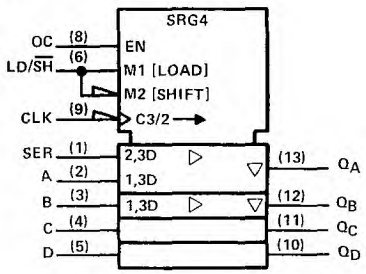

†This symbol is in accordance with ANSI/IEEE Std. 91-1984 and IEC Publication 617-12.
Pin numbers shown are for D, J, N, and W packages

PRODUCTION DATA documents contain information current as of publication date. Products conform to specifications per the terms of Texas Instruments standard warranty. Production processing does not necessarily include testing of all parameters.

logic diagram (positive logic)

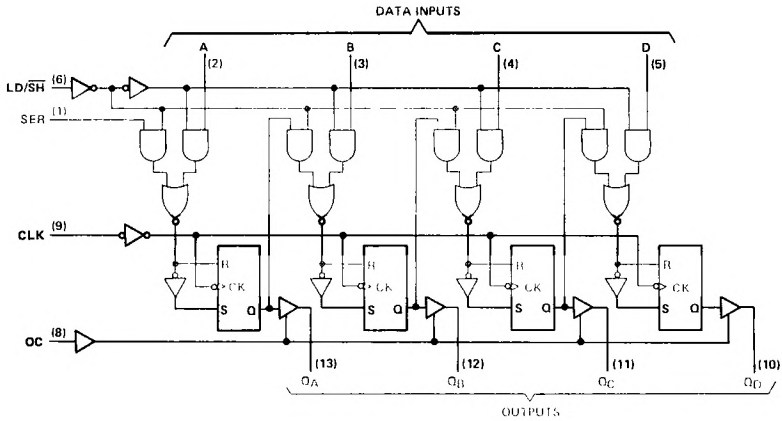

Pin numbers shown are for D, J, N, and W packages

schematics of inputs and outputs

EQUIVALENT OF SERIAL AND DATA INPUTS

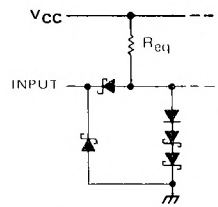

Serial: R_{eq} = 30 kΩ NOM
A, B, C, D: R_{eq} = 20 kΩ NOM

EQUIVALENT OF CLK, LD/SH, AND OC INPUTS

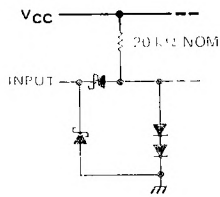

TYPICAL OF ALL OUTPUTS

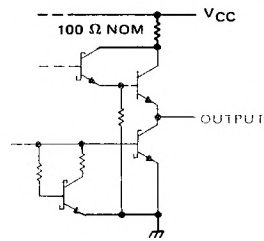

TEXAS INSTRUMENTS
POST OFFICE BOX 655012 • DALLAS, TEXAS 75265

FUNCTION TABLE

INPUTS							OUTPUTS			
LD/$\overline{SH}$	CLK	SER	PARALLEL				Q_A	Q_B	Q_C	Q_D
			A	B	C	D				
H	H	X	X	X	X	X	Q_{A0}	Q_{B0}	Q_{C0}	Q_{D0}
H	↓	X	a	b	c	d	a	b	c	d
H	↓	X	Q_B†	Q_C†	Q_D†	d	Q_{Bn}	Q_{Cn}	Q_{Dn}	d
L	H	X	X	X	X	X	Q_{A0}	Q_{B0}	Q_{C0}	Q_{D0}
L	↓	H	X	X	X	X	H	Q_{An}	Q_{Bn}	Q_{Cn}
L	↓	L	X	X	X	X	L	Q_{An}	Q_{Bn}	Q_{Cn}

When the output control is low, the outputs are disabled to the high-impedance state; however, sequential operation of the registers is not affected.

†Shifting left requires external connection of Q_B to A, Q_C to B, and Q_D to C. Serial data is entered at input D.

H = high level (steady state), L = low level (steady state), X = irrelevant (any input, including transitions)
↓ = transition from high to low level.
a, b, c, d = the level of steady-state input at inputs A, B, C, or D, respectively.
Q_{A0}, Q_{B0}, Q_{C0}, Q_{D0} = the level of Q_A, Q_B, Q_C, or Q_D, respectively, before the indicated steady-state input conditions were established.
Q_{An}, Q_{Bn}, Q_{Cn}, Q_{Dn} = the level of Q_A, Q_B, Q_C, or Q_D, respectively, before the most-recent ↓ transition of the clock.

absolute maximum ratings over operating free-air temperature range (unless otherwise noted)

Supply voltage, V_{CC} (see Note 1) . . . . . 7 V
Input voltage . . . . . 7 V
Operating free-air temperature range: SN54LS295B . . . . . −55°C to 125°C
SN74LS295B . . . . . 0°C to 70°C
Storage temperature range . . . . . −65°C to 150°C

NOTE 1: Voltage values are with respect to network ground terminal.

recommended operating conditions

			SN54LS295B			SN74LS295B			UNIT
			MIN	NOM	MAX	MIN	NOM	MAX	
V_{CC}	Supply voltage		4.5	5	5.5	4.75	5	5.25	V
I_{OH}	High-level output current				−1			−2.6	mA
I_{OL}	Low-level output current				12			24	mA
f_{clock}	Clock frequency		0		30	0		30	MHz
$t_{w(clock)}$	Width of clock pulse		16			16			ns
t_{su}	Setup time, high-level or low-level data		20			20			ns
t_{su}	Setup time, LD/$\overline{SH}$ to CLK	high-level	25			25			ns
		low-level	30			30			
t_h	Hold time, high-level or low-level data		20			20			ns
t_h	Hold time, high-level or low-level LD/$\overline{SH}$ to CLK		0			0			ns
T_A	Operating free-air temperature		−55		125	0		70	°C

electrical characteristics over recommended operating free-air temperature range (unless otherwise noted)

PARAMETER		TEST CONDITIONS†			SN54LS295B			SN74LS295B			UNIT
					MIN	TYP‡	MAX	MIN	TYP‡	MAX	
V_{IH}	High-level input voltage				2			2			V
V_{IL}	Low-level input voltage						0.7			0.8	V
V_{IK}	Input clamp voltage	V_{CC} = MIN,	I_I = −18 mA				−1.5			−1.5	V
V_{OH}	High-level output voltage	V_{CC} = MIN, V_{IL} = V_{IL} max,	V_{IH} = 2 V, I_{OH} = MAX		2.4	3.4		2.4	3.1		V
V_{OL}	Low-level output voltage	V_{CC} = MIN, V_{IL} = V_{IL} max	V_{IH} = 2 V,	I_{OL} = 12 mA		0.25	0.4		0.25	0.4	V
				I_{OL} = 24 mA					0.35	0.5	
I_{OZH}	Off-state output current, high-level voltage applied	V_{CC} = MAX, V_O = 2.7 V	V_{IL} = V_{IL} max,				20			20	μA
I_{OZL}	Off-state output current, low-level voltage applied	V_{CC} = MAX, V_O = 0.4 V	V_{IH} = 2 V,				−20			−20	μA
I_I	Input current at maximum input voltage	V_{CC} = MAX,	V_I = 7 V				0.1			0.1	mA
I_{IH}	High-level input current	V_{CC} = MAX,	V_I = 2.7 V				20			20	μA
I_{IL}	Low-level input current	V_{CC} = MAX,	V_I = 0.4 V				−0.4			−0.4	mA
I_{OS}	Short-circuit output current§	V_{CC} = MAX			−30		−130	−30		−130	mA
I_{CC}	Supply current	V_{CC} = MAX,	See Note 2	Condition A		20	29		20	29	mA
				Condition B		22	33		22	33	

†For conditions shown as MIN or MAX, use the appropriate value specified under recommended operating conditions.
‡All typical values are at V_{CC} = 5 V, T_A = 25°C.
§Not more than one output should be shorted at a time,and duration of the short-circuit should not exceed one second.
NOTE 2: I_{CC} is measured with the outputs open, the serial input and mode control at 4.5 V, and the data inputs grounded under the following conditions:
A. Output control at 4.5 V and a momentary 3 V, then ground, applied to clock input.
B. Output control and clock input grounded.

switching characteristics, V_{CC} = 5 V, T_A = 25 C, R_L = 667 Ω

PARAMETER		TEST CONDITIONS	MIN	TYP	MAX	UNIT
f_{max}	Maximum clock frequency	C_L = 45 pF, See Note 3	30	45		MHz
t_{PLH}	Propagation delay time, low-to-high-level output			14	20	ns
t_{PHL}	Propagation delay time, high-to-low-level output			19	30	ns
t_{PZH}	Output enable time to high level			18	26	ns
t_{PZL}	Output enable time to low level			20	30	ns
t_{PHZ}	Output disable time from high level	C_L = 5 pF, See Note 3		13	20	ns
t_{PLZ}	Output disable time from low level			13	20	ns

NOTE 3: Load circuits and voltage waveforms are shown in Section 1.

TEXAS INSTRUMENTS
POST OFFICE BOX 655012 • DALLAS, TEXAS 75265

D2629, JANUARY 1981 – REVISED MARCH 1988

- **Digital Design Avoids Analog Compensation Errors**
- **Easily Cascadable for Higher Order Loops**
- **Useful Frequency from DC to:**
  50 MHz Typical (K Clock)
  35 MHz Typical (I/D Clock)

SN54LS297 . . . J OR W PACKAGE
SN74LS297 . . . N PACKAGE
(TOP VIEW)

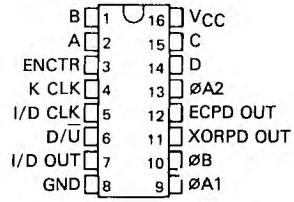

SN54LS297 . . . FK PACKAGE
(TOP VIEW)

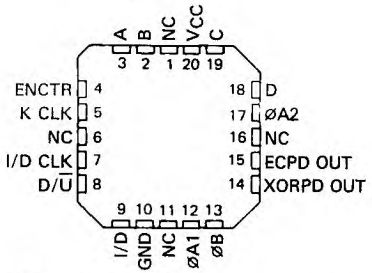

NC-No internal connection

description

The SN54LS297 and SN74LS297 devices are designed to provide a simple, cost-effective solution to high-accuracy, digital, phase-locked-loop applications. These devices contain all the necessary circuits, with the exception of the divide-by-N counter, to build first order phase-locked loops as described in Figure 1.

Both exclusive-OR (XORPD) and edge-controlled (ECPD) phase detectors are provided for maximum flexibility.

Proper partitioning of the loop function, with many of the building blocks external to the package, makes it easy for the designer to incorporate ripple cancellation or to cascade to higher order phase-locked loops.

The length of the up/down K counter is digitally programmable according to the K counter function table. With A, B, C, and D all low, the K counter is disabled. With A high and B, C, and D low, the K counter is only three stages long, which widens the bandwidth or capture range and shortens the lock time of the loop. When A, B, C, and D are all programmed high, the K counter becomes seventeen stages long, which narrows the bandwidth or capture range and lengthens the lock time. Real-time control of loop bandwidth by manipulating the A through D inputs can maximize the overall performance of the digital phase-locked loop.

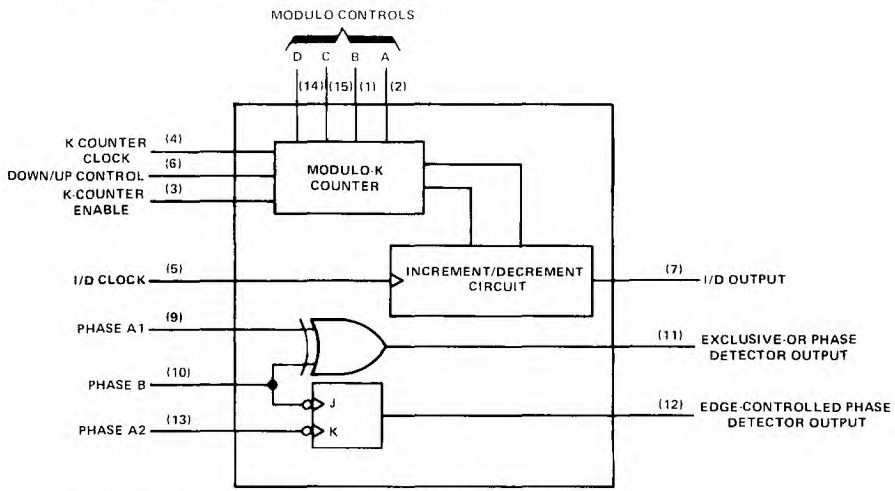

FIGURE 1–SIMPLIFIED BLOCK DIAGRAM

Pin numbers shown are for J, N and W packages.

PRODUCTION DATA documents contain information current as of publication date. Products conform to specifications per the terms of Texas Instruments standard warranty. Production processing does not necessarily include testing of all parameters.

description (continued)

The 'LS297 can perform the classic first-order phase-locked loop function without using analog components. The accuracy of the digital phase-locked loop (DPLL) is not affected by V_{CC} and temperature variations, but depends solely on accuracies of the K clock, I/D clock, and loop propagation delays. The I/D clock frequency and the divide-by-N modulos will determine the center frequency of the DPLL. The center frequency is defined by the relationship f_C = I/D Clock/2N (Hz).

logic diagram (positive logic)

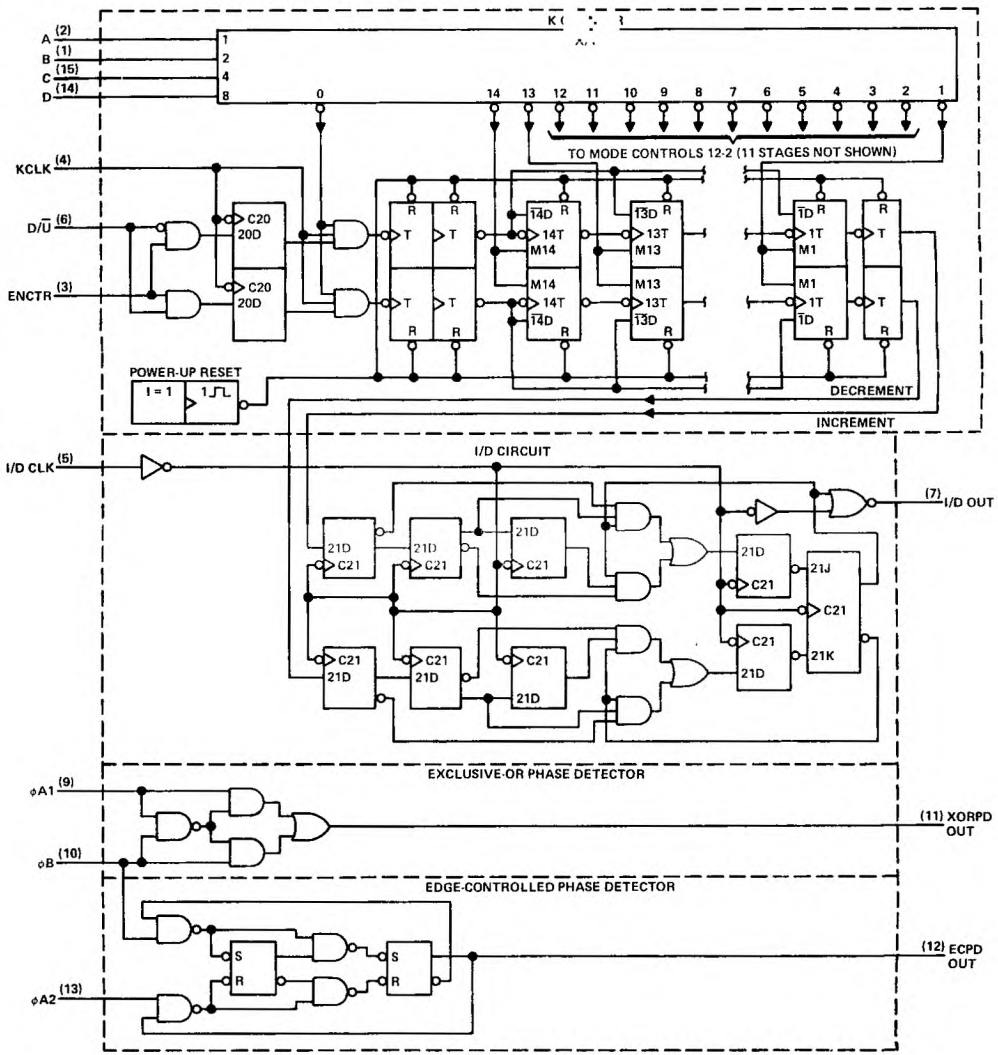

Pin numbers shown are for J, N, and W packages.

TEXAS INSTRUMENTS
POST OFFICE BOX 655012 • DALLAS, TEXAS 75265

K COUNTER FUNCTION TABLE
(DIGITAL CONTROL)

D	C	B	A	MODULO (K)
L	L	L	L	Inhibited
L	L	L	H	2^3
L	L	H	L	2^4
L	L	H	H	2^5
L	H	L	L	2^6
L	H	L	H	2^7
L	H	H	L	2^8
L	H	H	H	2^9
H	L	L	L	2^{10}
H	L	L	H	2^{11}
H	L	H	L	2^{12}
H	L	H	H	2^{13}
H	H	L	L	2^{14}
H	H	L	H	2^{15}
H	H	H	L	2^{16}
H	H	H	H	2^{17}

FUNCTION TABLE
EXCLUSIVE-OR PHASE DETECTOR

ϕA1	ϕB	XORPD OUT
L	L	L
L	H	H
H	L	H
H	H	L

FUNCTION TABLE
EDGE-CONTROLLED PHASE DETECTOR

ϕA2	ϕB	ECPD OUT
H or L	↓	H
↓	H or L	L
H or L	↑	No change
↑	H or L	No change

H = steady-state high level
L = steady-state low level
↓ = transition from high to low
↑ = transition from low to high

schematics of inputs and outputs

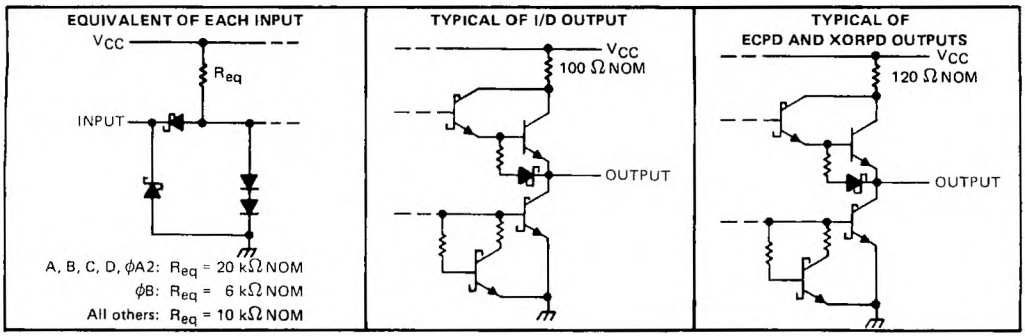

operation

The phase detector generates an error signal waveform that, at zero phase error, is a 50% duty cycle square wave. At the limits of linear operation, the phase detector output will be either high or low all of the time, depending on the direction of the phase error ($\phi_{in} - \phi_{out}$). Within these limits, the phase detector output varies linearly with the input phase error according to the gain k_d, which is expressed in terms of phase detector output per cycle of phase error. The phase detector output can be defined to vary between ±1 according to the relation:

$$\text{PD Output} = \frac{\%\ \text{high} - \%\ \text{low}}{100} \qquad (1)$$

The output of the phase detector will be $k_d\,\phi_e$, where the phase error $\phi_e = \phi_{in} - \phi_{out}$.

Exclusive-OR phase detectors (XORPD) and edge-controlled phase detectors (ECPD) are commonly used digital types. The ECPD is more complex than the XORPD logic function, but can be described generally as a circuit that changes states on one of the transitions of its inputs. k_d for an XORPD is 4 because its output remains high (PD output = 1) for a phase error of 1/4 cycle. Similarly, k_d for the ECPD is 2 since its output remains high for a phase error of 1/2 cycle. The type of phase detector will determine the zero-phase-error point, i.e., the phase separation of the phase detector inputs for ϕ_e defined to be zero. For the basic DPLL system of Figure 2, $\phi_e = 0$ when the phase detector output is a square wave. The XORPD inputs are 1/4 cycle out of phase for zero phase error. For the ECPD, $\phi_e = 0$ when the inputs are 1/2 cycle out of phase.

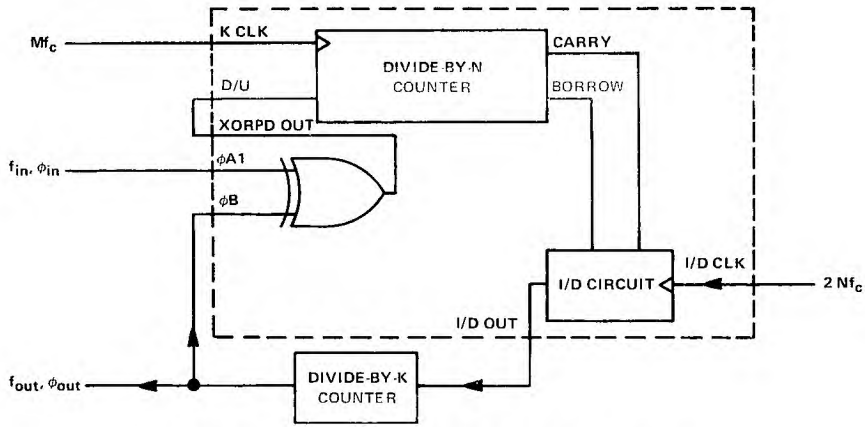

FIGURE 2–DPLL USING EXCLUSIVE-OR PHASE DETECTION

The phase detector output controls the up/down input to the K counter. The counter is clocked by input frequency Mf_c, which is a multiple M of the loop center frequency f_c. When the K counter recycles up, it generates a carry pulse. Recycling while counting down generates a borrow pulse. If the carry and borrow outputs are conceptually combined into one output that is positive for a carry and negative for a borrow, and if the K counter is considered as a frequency divider with the ratio Mf_c/K, the output of the K counter will equal the input frequency multiplied by the division ratio. Thus the output from the K counter is $(k_d \phi_e Mf_c)/K$.

The carry and borrow pulses go to the increment/decrement (I/D) circuit, which, in the absence of any carry or borrow pulse, has an output that is 1/2 of the input clock I/D CLK. The input clock is just a multiple, 2N, of the loop center frequency. In response to a carry or borrow pulse, the I/D circuit will either add or delete a pulse at I/D OUT. Thus the output of the I/D circuit will be $Nf_c + (k_d \phi_e Mf_c)/2K$.

The output of the N counter (or the output of the phase-locked loop) is thus:

$$f_o = f_c + (k_d \phi_e Mf_c)/2KN$$

If this result is compared to the equation for a first-order analog phase-locked loop, the digital equivalent of the gain of the VCO is just $Mf_c/2KN$ or f_c/K for $M = 2N$.

Thus the simple first-order phase-locked loop with an adjustable K counter is the equivalent of an analog phase-locked loop with a programmable VCO gain.

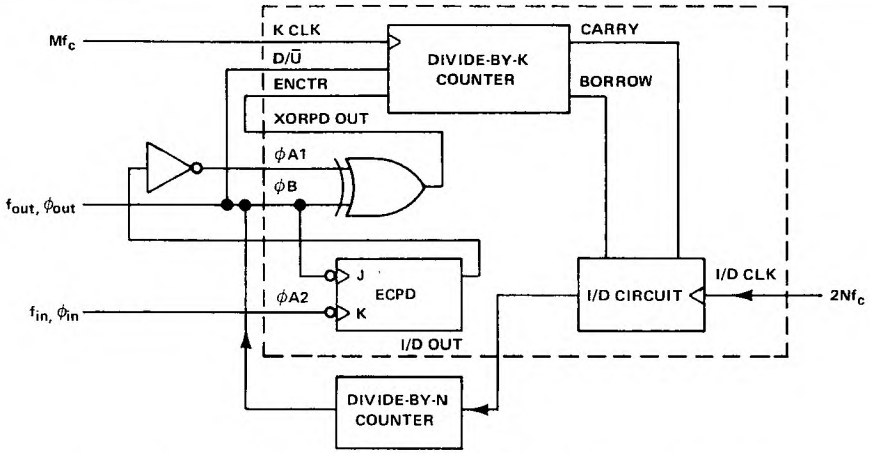

FIGURE 3–DPLL USING BOTH PHASE DETECTORS IN A RIPPLE-CANCELLATION SCHEME

absolute maximum rating over operating free-air temperature range (unless otherwise noted)

Supply voltage, V_{CC} (see Note 1) . . . . . 7 V
Input voltage . . . . . 7 V
Operating free-air temperature range: SN54LS297 . . . . . −55°C to 125°C
SN74LS297 . . . . . 0°C to 70°C
Storage temperature range . . . . . −65°C to 150°C

NOTE 1: Voltage values are with respect to network ground terminal.

recommended operating conditions

			SN54LS297			SN74LS297			UNIT
			MIN	NOM	MAX	MIN	NOM	MAX	
V_{CC}	Supply voltage		4.5	5	5.5	4.75	5	5.25	V
I_{OH}	High-level output current	I/D OUT			−1.2			−1.2	mA
		EXOR, ECPD			−400			−400	μA
I_{OL}	Low-level output current	I/D OUT			12			24	mA
		XOR, ECPD			4			8	mA
f_{clock}	Clock frequency	K Clock	0		32	0		32	MHz
		I/D Clock	0		16	0		16	MHz
t_w	Width of clock input pulse	K Clock	16			16			ns
		I/D Clock	33			33			ns
t_{su}, to K	Setup time to K Clock ↑	U/$\overline{D}$, ENCTR	30			30			ns
t_h	Hold time from K Clock ↑	U/$\overline{D}$, ENCTR	0			0			ns
T_A	Operating free-air temperature		55		125	0		70	°C

electrical characteristics over recommended operating free-air temperature range (unless otherwise noted)

PARAMETER			TEST CONDITIONS†		SN54LS297			SN74LS297			UNIT
					MIN	TYP‡	MAX	MIN	TYP‡	MAX	
V_{IH}	High-level input voltage				2			2			V
V_{IL}	Low-level input voltage						0.7			0.8	V
V_{IK}	Input clamp voltage		V_{CC} = MIN, I_I = −18 mA				−1.5			−1.5	V
V_{OH}	High-level output voltage	I/D OUT	V_{CC} = MIN, V_{IH} = 2 V, V_{IL} = V_{IL} max	I_{OH} = MAX	2.4			2.4			V
		Others		I_{OH} = MAX	2.5			2.7			
V_{OL}	Low-level output voltage	I/D OUT	V_{CC} = MIN, V_{IH} = 2 V, V_{IL} = V_{IL} max	I_{OL} = 12 mA		0.25	0.4		0.25	0.4	V
				I_{OL} = 24 mA					0.35	0.5	
		Others		I_{OL} = 4 mA		0.25	0.4		0.25	0.4	
				I_{OL} = 8 mA					0.35	0.5	
I_I	Input current at maximum input voltage		V_{CC} = MAX, V_I = 7 V				0.1			0.1	mA
I_{IH}	High-level input current	U/D̄, EN, φA1	V_{CC} = MAX, V_I = 2.7 V				40			40	μA
		φB					60			60	
		All others					20			20	
I_{IL}	Low-level input current	U/D̄, EN, φA1	V_{CC} = MAX, V_I = 0.4 V				−0.8			−0.8	mA
		φB					−1.2			−1.2	
		All others					−0.4			−0.4	
I_{OS}	Short-circuit output current §	I/D OUT	V_{CC} = MAX		−30		−130	−30		−130	mA
		Others			−20		−100	−20		−100	
I_{CC}	Supply current		V_{CC} = MAX, All inputs grounded, All outputs open			75	120		75	120	mA

†For conditions shown as MIN or MAX, use the appropriate value specified under recommended operating conditions.
‡All typical values are of V_{CC} = 5 V, T_A = 25°C.
§Not more than one output should be shorted at a time and the duration of the short-circuit should not exceed one second.

switching characteristics, V_{CC} = 5 V, T_A = 25°C

PARAMETER¶	FROM (INPUT)		TO (OUTPUT)	TEST CONDITIONS	MIN	TYP	MAX	UNIT
f_{max}	KCLK		I/D OUT	R_L = 667 Ω, C_L = 45 pF, See Note 2	32	50		MHz
	I/D CLK		I/D OUT		16	35		
t_{PLH}	I/D CLK ↑		I/D OUT			15	25	ns
t_{PHL}	I/D CLK ↑		I/D OUT			22	35	ns
t_{PLH}	φA1 or φB	Other input low	XOR OUT	R_L = 2 kΩ, C_L = 45 pF, See Note 2		10	15	ns
	φA1 or φB	Other input high	• OUT			17	25	
t_{PHL}	φA1 or φB	Other input low	• • OUT			15	25	ns
	φA1 or φB	Other input high	• • OUT			17	25	
t_{PLH}	φB ↓		) OUT			20	30	ns
t_{PHL}	φA2↓		ECPD OUT			20	30	ns

¶t_{PLH} = propagation delay time, low-to-high-level output
t_{PHL} = propagation delay time, high-to-low-level output
NOTE 2: Load circuits and voltage waveforms are shown in Section 1.

TEXAS INSTRUMENTS
POST OFFICE BOX 655012 • DALLAS, TEXAS 75265

MARCH 1974 – REVISED MARCH 1988

- **Selects One of Two 4-Bit Data Sources and Stores Data Synchronously with System Clock**
- **Applications:**
  Dual Source for Operands and Constants in Arithmetic Processor; Can Release Processor Register Files for Acquiring New Data

  Implement Separate Registers Capable of Parallel Exchange of Contents Yet Retain External Load Capability

  Universal Type Register for Implementing Various Shift Patterns; Even Has Compound Left-Right Capabilities

SN54298, SN54LS298 . . . J OR W PACKAGE
SN74298 . . . N PACKAGE
SN74LS298 . . . D OR N PACKAGE
(TOP VIEW)

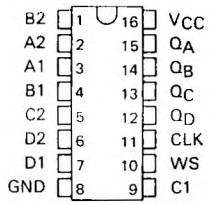

SN54LS298 . . . FK PACKAGE
(TOP VIEW)

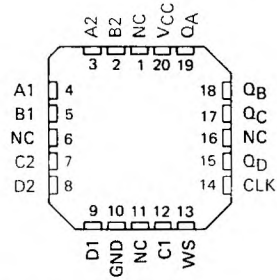

NC - No internal connection

description

These monolithic quadruple two-input multiplexers with storage provide essentially the equivalent functional capabilities of two separate MSI functions (SN54157/SN74157 or SN54LS157/SN74LS157 and SN54175/SN74175 or SN54LS175/SN74LS175) in a single 16-pin package.

When the word-select input is low, word 1 (A1, B1, C1, D1) is applies to the flip-flops. A high input to word select will cause the selection of word 2 (A2, B2, C2, D2). The selected word is clocked to the output terminals on the negative-going edge of the clock pulse.

Typical power dissipation is 195 milliwatts for the '298 and 65 milliwatts for the 'LS298. SN54298 and SN54LS298 are characterized for operation over the full military temperature range of −55°C to 125°C; SN74298 and SN74LS298 are characterized for operation from 0°C to 70°C.

FUNCTION TABLE

INPUTS		OUTPUTS			
WORD SELECT	CLOCK	Q_A	Q_B	Q_C	Q_D
L	↓	a1	b1	c1	d1
H	↓	a2	b2	c2	d2
X	H	Q_{A0}	Q_{B0}	Q_{C0}	Q_{D0}

H = high level (steady state)
L = low level (steady state)
X = irrelevant (any input, including transitions)
↓ = transition from high to low level
a1, a2, etc. = the level of steady-state input at A1, A2, etc.
Q_{A0}, Q_{B0}, etc. = the level of Q_A, Q_B, etc. entered on the most-recent ↓ transition of the clock input.

PRODUCTION DATA documents contain information current as of publication date. Products conform to specifications per the terms of Texas Instruments standard warranty. Production processing does not necessarily include testing of all parameters.

logic symbol†

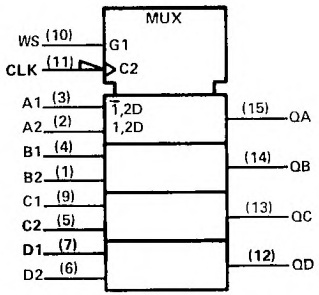

†This symbol is in accordance with ANSI/IEEE Std. 91-1984 and IEC Publication 617-12.
Pin numbers shown are for D, J, N, and W packages.

logic diagram (positive logic)

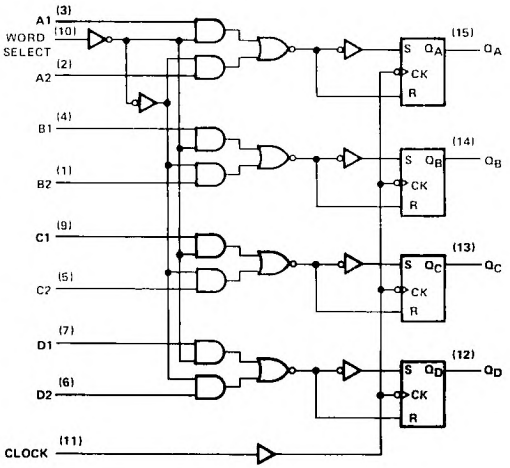

schematics of inputs and outputs

'298

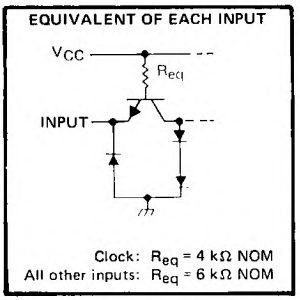

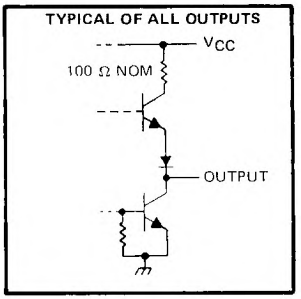

'LS298

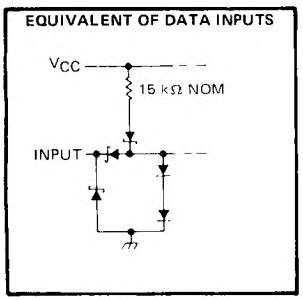

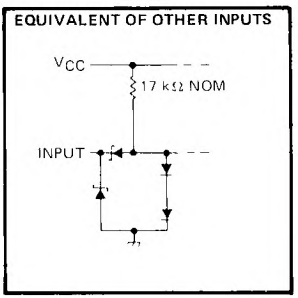

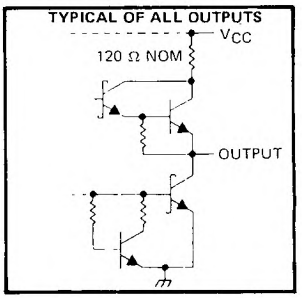

TEXAS INSTRUMENTS
POST OFFICE BOX 655012 • DALLAS, TEXAS 75265

absolute maximum ratings over operating free-air temperature range (unless otherwise noted)

Supply voltage, V_{CC} (see Note 1) . . . . . 7 V
Input voltage . . . . . 5.5 V
Operating free-air temperature range: SN54298 . . . . . −55°C to 125°C
SN74298 . . . . . 0°C to 70°C
Storage temperature . . . . . −65°C to 150°C

NOTE 1: Voltage values are with respect to network ground terminal.

recommended operating conditions

		SN54298			SN74298			UNIT
		MIN	NOM	MAX	MIN	NOM	MAX	
Supply voltage, V_{CC}		4.5	5	5.5	4.75	5	5.25	V
High-level output current, I_{OH}				−800			−800	μA
Low-level output current, I_{OL}				16			16	mA
Width of clock pulse, high or low level, t_w		20			20			ns
Setup time, t_{su}	Data	15			15			ns
	Word select	25			25			
Hold time, t_h	Data	5			5			ns
	Word select	0			0			
Operating free-air temperature, T_A		−55		125	0		70	°C

electrical characteristics over recommended operating free-air temperature range (unless otherwise noted)

PARAMETER		TEST CONDITIONS†	MIN	TYP‡	MAX	UNIT
V_{IH}	High-level input voltage		2			V
V_{IL}	Low-level input voltage				0.8	V
V_{IK}	Input clamp voltage	V_{CC} = MIN, I_I = −12 mA			−1.5	V
V_{OH}	High-level output voltage	V_{CC} = MIN, V_{IH} = 2 V, V_{IL} = 0.8 V, I_{OH} = −800 μA	2.4	3.2		V
V_{OL}	Low-level output voltage	V_{CC} = MIN, V_{IH} = 2 V, V_{IL} = 0.8 V, I_{OL} = 16 mA			0.4	V
I_I	Input current at maximum input voltage	V_{CC} = MAX, V_I = 5.5 V			1	mA
I_{IH}	High-level input current	V_{CC} = MAX, V_I = 2.4 V			40	μA
I_{IL}	Low-level input current	V_{CC} = MAX, V_I = 0.4 V			−1.6	mA
I_{OS}	Short-circuit output current§	V_{CC} = MAX	SN54...	−20	−57	mA
			SN74...	−18	−57	
I_{CC}	Supply current	V_{CC} = MAX, See Note 2		39	65	mA

†For conditions shown as MIN or MAX, use the appropriate value specified under recommended operating conditions.
‡All typical values are at V_{CC} = 5 V, T_A = 25°C.
§Not more than one output should be shorted at a time.
NOTE 2: With all outputs open and all inputs except clock low, I_{CC} is measured after applying a momentary 4.5 V, followed by ground, to the clock input.

switching characteristics, V_{CC} = 5 V, T_A = 25°C

PARAMETER		TEST CONDITIONS	TYP	MAX	UNIT
t_{PLH}	Propagation delay time, low-to-high-level output	C_L = 15 pF, R_L = 400 Ω, See Note 3	18	27	ns
t_{PHL}	Propagation delay time, high-to-low-level output		21	32	

NOTE 3: Load circuits and voltage waveforms are shown in Section 1.

absolute maximum ratings over operating free-air temperature range (unless otherwise noted)

Supply voltage, V_{CC} (see Note 1) . . . . . 7 V
Input voltage . . . . . 7 V
Operating free-air temperature range: SN54LS298 . . . . . −55°C to 125°C
SN74LS298 . . . . . 0°C to 70°C
Storage temperature range . . . . . −65°C to 150°C

NOTE 1: Voltage values are with respect to network ground terminal.

recommended operating conditions

		SN54LS298			SN74LS298			UNIT
		MIN	NOM	MAX	MIN	NOM	MAX	
Supply voltage, V_{CC}		4.5	5	5.5	4.75	5	5.25	V
High-level output current, I_{OH}				−400			−400	μA
Low-level output current, I_{OL}				4			8	mA
Width of clock pulse, high or low level, t_w		20			20			ns
Setup time, t_{su}	Data	15			15			ns
	Word select	25			25			
Hold time, t_h	Data	5			5			ns
	Word select	0			0			
Operating free-air temperature, T_A		−55		125	0		70	°C

electrical characteristics over recommended operating free-air temperature range (unless otherwise noted)

PARAMETER		TEST CONDITIONS†			SN54LS298			SN74LS298			UNIT
					MIN	TYP‡	MAX	MIN	TYP‡	MAX	
V_{IH}	High-level input voltage				2			2			V
V_{IL}	Low-level input voltage						0.7			0.8	V
V_{IK}	Input clamp voltage	V_{CC} = MIN,	I_I = −18 mA				−1.5			−1.5	V
V_{OH}	High-level output voltage	V_{CC} = MIN, V_{IL} = V_{IL} max,	V_{IH} = 2 V, I_{OH} = −400 μA		2.5	3.4		2.7	3.4		V
V_{OL}	Low-level output voltage	V_{CC} = MIN, V_{IL} = V_{IL} max	V_{IH} = 2 V,	I_{OL} = 4 mA		0.25	0.4		0.25	0.4	V
				I_{OL} = 8 mA					0.35	0.5	
I_I	Input current at maximum input voltage	V_{CC} = MAX,	V_I = 7 V				0.1			0.1	mA
I_{IH}	High-level input current	V_{CC} = MAX,	V_I = 2.7 V				20			20	μA
I_{IL}	Low-level input current	V_{CC} = MAX,	V_I = 0.4 V				−0.4			−0.4	mA
I_{OS}	Short-circuit output current§	V_{CC} = MAX			−20		−100	−20		−100	mA
I_{CC}	Supply current	V_{CC} = MAX,	See Note 2			13	21		13	21	mA

†For conditions shown as MIN or MAX, use the appropriate value specified under recommended operating conditions.
‡All typical values are at V_{CC} = 5 V, T_A = 25°C.
§Not more than one output should be shorted at a time, and duration of the short-circuit should not exceed one second.
NOTE 2: With all outputs open and all inputs except clock low, I_{CC} is measured after applying a momentary 4.5 V, followed by ground, to the clock input.

switching characteristics, V_{CC} = 5 V, T_A = 25°C

PARAMETER		TEST CONDITIONS	MIN	TYP	MAX	UNIT
t_{PLH}	Propagation delay time, low-to-high-level output	C_L = 15 pF, R_L = 2 kΩ, See Note 3		18	27	ns
t_{PHL}	Propagation delay time, high-to-low-level output			21	32	

NOTE 3: Load circuits and voltage waveforms are shown in Section 1.

TEXAS INSTRUMENTS
POST OFFICE BOX 655012 • DALLAS, TEXAS 75265

TYPICAL APPLICATION DATA

This versatile multiplexer/register can be connected to operate as a shift register that can shift N-places in a single clock pulse.

The following figure illustrates a BCD shift register that will shift an entire 4-bit BCD digit in one clock pulse.

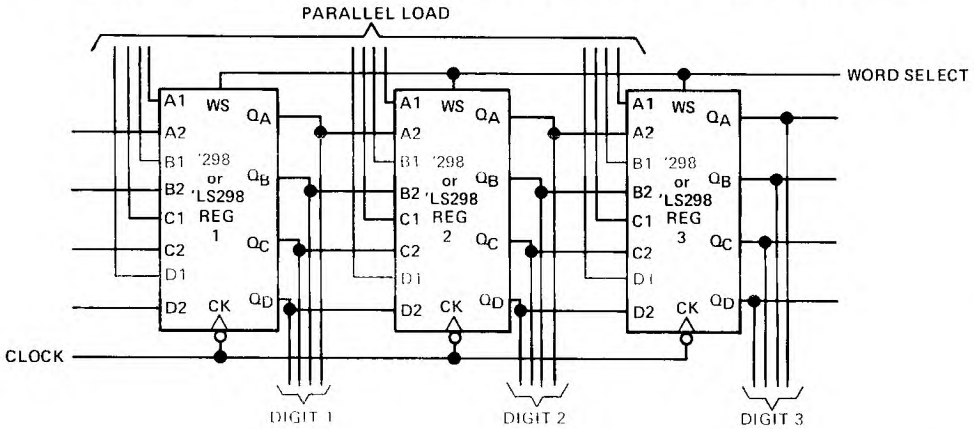

When the word-select input is high and the registers are clocked, the contents of register 1 is transferred (shifted) to register 2 and etc. In effect, the BCD digits are shifted one position. In addition, this application retains a parallel-load capability which means that new BCD data can be entered in the entire register with one clock pulse. This arrangement can be modified to perform the shifting of binary data for any number of bit locations.

Another function that can be implemented with the '298 or 'LS298 is a register that can be designed specifically for supporting multiplier or division operations. The example below is a one place/two-place shift register.

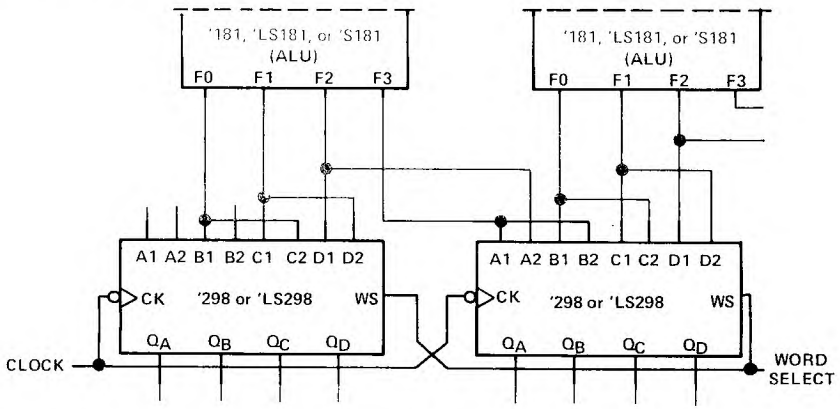

When word select is low and the register is clocked, the outputs of the arithmetic/logic units (ALU's) are shifted one place. When word select is high and the registers are clocked, the data is shifted two places.

MARCH 1974 – REVISED MARCH 1988

- **Multiplexed Inputs/Outputs Provide Improved Bit Density**
- **Four Modes of Operations:**
  Hold (Store) Shift Left
  Shift Right Load Data
- **Operates with Outputs Enabled or at High Z**
- **3-State Outputs Drive Bus Lines Directly**
- **Can Be Cascaded for N-Bit Word Lengths**
- **SN54LS323 and SN74LS323 Are Similar But Have Synchronous Clear**
- **Applications:**
  Stacked or Push-Down Registers
  Buffer Storage, and Accumulator Registers

TYPE	GUARANTEED SHIFT (CLOCK) FREQUENCY	TYPICAL POWER DISSIPATION
'LS299	25 MHz	175 mW
'S299	50 MHz	700 mW

SN54LS299, SN54S299 . . . J OR W PACKAGE
SN74LS299, SN74S299 . . . DW OR N PACKAGE
(TOP VIEW)

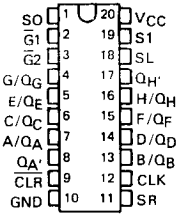

SN54LS299, SN54S299 . . . FK PACKAGE
(TOP VIEW)

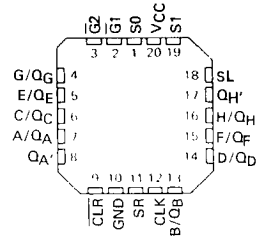

description

These Schottky TTL eight-bit universal registers feature multiplexed inputs/outputs to achieve full eight-bit data handling in a single 20-pin package. Two function-select inputs and two output-control inputs can be used to choose the modes of operation listed in the function table.

Synchronous parallel loading is accomplished by taking both function-select lines, S0 and S1, high. This places the three-state outputs in a high-impedance state, which permits data that is applied on the input/output lines to be clocked into the register. Reading out of the register can be accomplished while the outputs are enabled in any mode. A direct overriding input is provided to clear the register whether the outputs are enabled or off.

FUNCTION TABLE

MODE	INPUTS								OUTPUTS									
	CLR	FUNCTION SELECT S1	S0	OUTPUT CONTROL G1*	G2*	CLK	SERIAL SL	SR	A/QA	B/QB	C/QC	D/QD	E/QE	F/QF	G/QG	H/QH	QA'	QH'
Clear	L	X	L	L	L	X	X	X	L	L	L	L	L	L	L	L	L	L
	L	L	X	L	L	X	X	X	L	L	L	L	L	L	L	L	L	L
	L	H	H	X	X	X	X	X	X	X	X	X	X	X	X	X	L	L
Hold	H	L	L	L	L	X	X	X	Q_{A0}	Q_{B0}	Q_{C0}	Q_{D0}	Q_{E0}	Q_{F0}	Q_{G0}	Q_{H0}	Q_{A0}	Q_{H0}
	H	X	X	L	L	L	X	X	Q_{A0}	Q_{B0}	Q_{C0}	Q_{D0}	Q_{E0}	Q_{F0}	Q_{G0}	Q_{H0}	Q_{A0}	Q_{H0}
Shift Right	H	L	H	L	L	↑	X	H	H	Q_{An}	Q_{Bn}	Q_{Cn}	Q_{Dn}	Q_{En}	Q_{Fn}	Q_{Gn}	H	Q_{Gn}
	H	L	H	L	L	↑	X	L	L	Q_{An}	Q_{Bn}	Q_{Cn}	Q_{Dn}	Q_{En}	Q_{Fn}	Q_{Gn}	L	Q_{Gn}
Shift Left	H	H	L	L	L	↑	H	X	Q_{Bn}	Q_{Cn}	Q_{Dn}	Q_{En}	Q_{Fn}	Q_{Gn}	Q_{Hn}	H	Q_{Bn}	H
	H	H	L	L	L	↑	L	X	Q_{Bn}	Q_{Cn}	Q_{Dn}	Q_{En}	Q_{Fn}	Q_{Gn}	Q_{Hn}	L	Q_{Bn}	L
Load Data	H	H	H	X	X	↑	X	X	a	b	c	d	e	f	g	h	a	h

* When one or both output controls are high the eight input/output terminals are disabled to the high-impedance state; however, sequential operation or clearing of the register is not affected.

a . . . h = the level of the steady-state input at inputs A through H, respectively. These data are loaded into the flip-flops while the flip-flop outputs are isolated from the input/output terminals.

PRODUCTION DATA documents contain information current as of publication date. Products conform to specifications per the terms of Texas Instruments standard warranty. Production processing does not necessarily include testing of all parameters.

logic symbol†

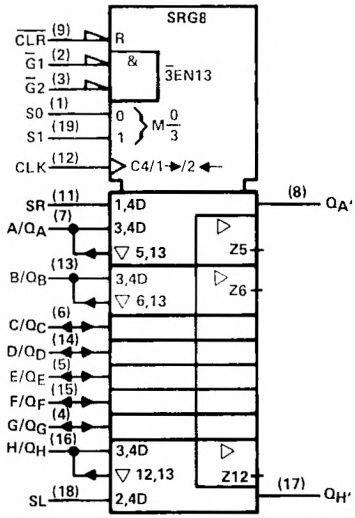

† This symbol is in accordance with ANSI/IEEE Std 91-1984 and IEC Publication 617-12.
Pin numbers shown are for DW, J, N, and W packages.

logic diagram (positive logic)

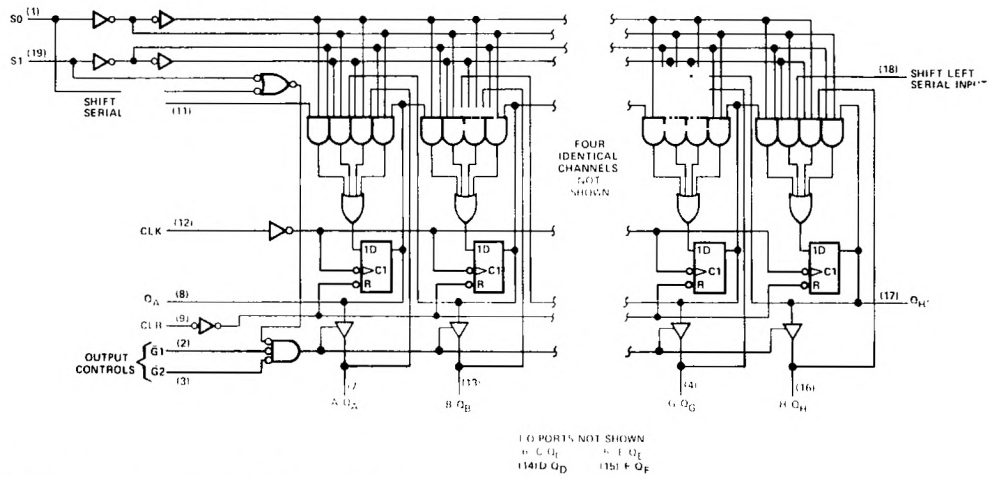

Pin numbers shown are for DW, J, N, and W packages.

TEXAS INSTRUMENTS
POST OFFICE BOX 655012 • DALLAS, TEXAS 75265

schematics of inputs and outputs

EQUIVALENT OF EACH INPUT

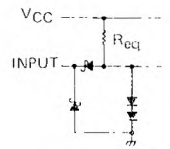

S0, S1: R_{eq} = 9 kΩ NOM
All other inputs: R_{eq} = 18 kΩ NOM

TYPICAL OF OUTPUTS
Q_A THRU Q_H

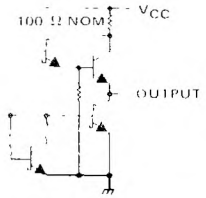

TYPICAL OF OUTPUTS
$Q_{A'}$ THRU $Q_{H'}$

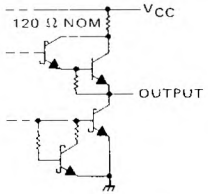

absolute maximum ratings over operating free-air temperature range (unless otherwise noted)

Supply voltage, V_{CC} (see Note 1) . . . . . 7 V
Input voltage . . . . . 7 V
Off-state output voltage . . . . . 5.5 V
Operating free-air temperature range: SN54LS299 . . . . . −55°C to 125°C
SN74LS299 . . . . . 0°C to 70°C
Storage temperature . . . . . −65°C to 150°C

NOTE 1: Voltage values are with respect to network ground terminal.

recommended operating conditions

		SN54LS299			SN74LS299			UNIT
		MIN	NOM	MAX	MIN	NOM	MAX	
Supply voltage, V_{CC}		4.5	5	5.5	4.75	5	5.25	V
High-level output current, I_{OH}	Q_A thru Q_H			−1			−2.6	mA
	$Q_{A'}$ or $Q_{H'}$			−0.4			−0.4	
Low-level output current, I_{OL}	Q_A thru Q_H			12			24	mA
	$Q_{A'}$ or $Q_{H'}$			4			8	
Clock frequency, f_{clock}		0		20	0		20	MHz
Width of clock pulse, $t_{w(clock)}$	Clock high	30			30			ns
	low	18			10			
Width of clear pulse, $t_{w(clear)}$	ow	25			20			ns
Setup time, t_{su}	Select	35†			35†			ns
	High-level data†	20†			20†			
	Low-level data†	20†			20†			
	Clear inactive-state	24†			20†			
Hold time, t_h	Select	10†			10†			ns
	Data†	3†			0†			
Operating free-air temperature, T_A		−55		125	0		70	°C

† Data includes the two serial inputs and the eight input/output data lines.

electrical characteristics over recommended operating free-air temperature range (unless otherwise noted)

PARAMETER			TEST CONDITIONS†		SN54LS299 MIN	SN54LS299 TYP‡	SN54LS299 MAX	SN74LS299 MIN	SN74LS299 TYP‡	SN74LS299 MAX	UNIT
V_{IH}	High-level input voltage				2			2			V
V_{IL}	Low-level input voltage						0.7			0.8	V
V_{IK}	Input clamp voltage		V_{CC} = MIN,	I_I = −18 mA			−1.5			−1.5	V
V_{OH}	High-level output voltage	Q_A thru Q_H	V_{CC} = MIN,	V_{IH} = 2 V,	2.4	3.2		2.4	3.1		V
		$Q_{A'}$ or $Q_{H'}$	V_{IL} = V_{IL}max,	I_{OH} = MAX	2.5	3.4		2.7	3.4		
V_{OL}	Low-level output voltage	Q_A thru Q_H	V_{CC} = MIN,	I_{OL} = 12 mA		0.25	0.4		0.25	0.4	V
			V_{IH} = 2 V,	I_{OL} = 24 mA					0.35	0.5	
		$Q_{A'}$ or $Q_{H'}$	V_{IL} = V_{IL}max	I_{OL} = 4 mA		0.25	0.4		0.25	0.4	
				I_{OL} = 8 mA					0.35	0.5	
I_{OZH}	Off-state output current, high-level voltage applied	Q_A thru Q_H	V_{CC} = MAX, V_O = 2.7 V	V_{IH} = 2 V,			40			40	μA
I_{OZL}	Off-state output current, low-level voltage applied	Q_A thru Q_H	V_{CC} = MAX, V_O = 0.4 V	V_{IH} = 2 V,			−400			−400	μA
I_I	Input current at maximum input voltage	S0, S1	V_{CC} = MAX	V_I = 7 V							μA
		A thru H		V_I = 5.5 V							
		Any other		V_I = 7 V			100			100	
I_{IH}	High-level input current	A thru H, S0, S1	V_{CC} = MAX,	V_I = 2.7 V			40			40	μA
		Any other					20			20	
I_{IL}	Low-level input current	S0, S1	V_{CC} = MAX,	V_I = 0.4 V			−0.8			−0.8	mA
		Any other					−0.4			−0.4	
I_{OS}	Short-circuit output current§	Q_A thru Q_H	V_{CC} = MAX		−30			−30		−130	mA
		$Q_{A'}$ or $Q_{H'}$			−20			−20		−100	
I_{CC}	Supply current		V_{CC} = MAX			33	53		33	53	mA

†For conditions shown as MIN or MAX, use the appropriate value specified under recommended operating conditions.
‡All typical values are at V_{CC} = 5 V, T_A = 25°C.
§Not more than one output should be shorted at a time and duration of the short-circuit should not exceed one second.

switching characteristics, V_{CC} = 5 V, T_A = 25°C

PARAMETER¶	FROM (INPUT)	TO (OUTPUT)	TEST CONDITIONS	MIN	TYP	MAX	UNIT
f_{max}			See Note 2	20	35		MHz
t_{PLH}	CLK	$Q_{A'}$ or $Q_{H'}$	R_L = 2 kΩ, C_L = 15 pF		22	33	ns
t_{PHL}					26	39	
t_{PHL}	$\overline{CLR}$	$Q_{A'}$ or $Q_{H'}$			27	40	ns
t_{PLH}	CLK	Q_A thru Q_H	R_L = 665 Ω, C_L = 45 pF		17	25	ns
t_{PHL}					26	39	
t_{PHL}	$\overline{CLR}$	Q_A thru Q_H			26	40	ns
t_{PZH}	$\overline{G}1$, $\overline{G}2$	Q_A thru Q_H			13	21	ns
t_{PZL}					19	30	
t_{PHZ}	$\overline{G}1$, $\overline{G}2$	Q_A thru Q_H	R_L = 665 Ω, C_L = 5 pF		10	20	ns
t_{PLZ}					10	15	

¶f_{max} = maximum clock frequency
t_{PLH} = propagation delay time, low-to-high-level output
t_{PHL} = propagation delay time, high-to-low-level output
t_{PZH} = output enable time to high level
t_{PZL} = output enable time to low level
t_{PHZ} = output disable time from high level
t_{PLZ} = output disable time from low level

NOTE 2. For testing f_{max}, all outputs are loaded simultaneously, each with C_L and R_L as specified for the propagation times. Load circuits and voltage waveforms are shown in Section 1.

TEXAS INSTRUMENTS
POST OFFICE BOX 655012 • DALLAS, TEXAS 75265

schematics of inputs and outputs

EQUIVALENT OF CLOCK AND CLEAR INPUTS

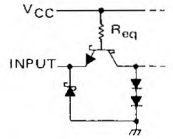

Clock: R_{eq} = 2.8 kΩ NOM
Clear. R_{eq} – 3.5 kΩ NOM

EQUIVALENT OF $\overline{G}1$ AND $\overline{G}2$ INPUTS

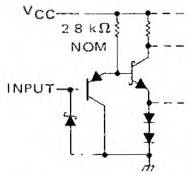

EQUIVALENT OF A THRU H†, S0, S1, SHIFT RIGHT, AND SHIFT LEFT INPUTS

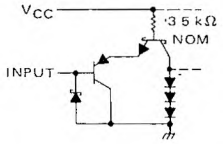

† When 3-state outputs are disabled.

TYPICAL OF OUTPUTS Q_A THRU Q_H

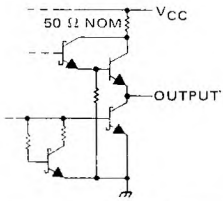

TYPICAL OF OUTPUTS $Q_{A'}$ AND $Q_{H'}$

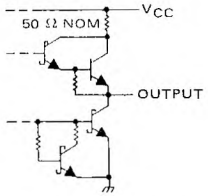

absolute maximum ratings over operating free-air temperature range (unless otherwise noted)

Supply voltage, V_{CC} (see Note 1) . . . . . 7 V
Input voltage . . . . . 5.5 V
Off-state output voltage . . . . . 5.5 V
Operating free-air temperature range: SN54S299 (See Note 1) . . . . . −55°C to 125°C
SN74S299 . . . . . 0°C to 70°C
Storage temperature range . . . . . −65°C to 150°C

NOTE 1: Voltage values are with respect to network ground terminal.

recommended operating conditions

		SN54S299			SN74S299			UNIT
		MIN	NOM	MAX	MIN	NOM	MAX	
Supply voltage, V_{CC}		4.5	5	5.5	4.75	5	5.25	V
High-level output current, I_{OH}	Q_A thru Q_H			−2			−6.5	mA
	$Q_{A'}$ or $Q_{H'}$			−0.5			−0.5	
Low-level output current, I_{OL}	Q_A thru Q_H			20			20	mA
	$Q_{A'}$ or $Q_{H'}$			6			6	
Clock frequency, f_{clock}		0		50	0		50	MHz
Width of clock pulse, $t_{w(clock)}$	Clock high	10			10			ns
	Clock low	10			10			
Width of clear pulse, $t_{w(clear)}$	$\overline{\text{Clear}}$ low	10			10			ns
Setup time, t_{su}	Select	15†			15†			ns
	High-level data‡	7†			7†			
	Low-level data‡	5†			5†			
	$\overline{\text{Clear}}$ inactive-state	10†			10†			
Hold time, t_h	Select	5†			5†			ns
	Data‡	5†			5†			
Operating free-air temperature, T_A		−55		125	0		70	°C

‡ Data includes the two serial inputs and the eight input/output data lines.

electrical characteristics over recommended operating free-air temperature range (unless otherwise noted)

PARAMETER			TEST CONDITIONS†	MIN	TYP‡	MAX	UNIT
V_{IH}	High-level input voltage			2			V
V_{IL}	Low-level input voltage					0.8	V
V_{IK}	Input clamp voltage		V_{CC} = MIN, I_I = −18 mA			−1.2	V
V_{OH}	High-level output voltage	Q_A thru Q_H	V_{CC} = MIN, V_{IH} = 2 V, V_{IL} = 0.8 V, I_{OH} = MAX	2.4	3.2		V
		Q_A' or Q_H'		2.7	3.4		
V_{OL}	Low-level output voltage		V_{CC} = MIN, V_{IH} = 2 V, V_{IL} = 0.8 V, I_{OL} = MAX			0.5	V
I_{OZH}	Off-state output current, high-level voltage applied	Q_A thru Q_H	V_{CC} = MAX, V_{IH} = 2 V, V_O = 2.4 V			100	μA
I_{OZL}	Off-state output current, low-level voltage applied	Q_A thru Q_H	V_{CC} = MAX, V_{IH} = 2 V, V_O = 0.5 V			−250	μA
I_I	Input current at maximum input voltage		V_{CC} = MAX, V_I = 5.5 V			1	mA
I_{IH}	High-level input current	A thru H, S0, S1	V_{CC} = MAX, V_I = 2.7 V			80	μA
		Any other				40	
I_{IL}	Low-level input current	CLK or $\overline{CLR}$	V_{CC} = MAX, V_I = 0.5 V			−2	mA
		S0, S1				−500	μA
		Any other				−250	μA
I_{OS}	Short-circuit output current§	Q_A thru Q_H	V_{CC} = MAX	−40		−100	mA
		Q_A' or Q_H'		−20		−100	
I_{CC}	Supply current		V_{CC} = MAX		140	225	mA

† For conditions shown as MIN or MAX, use the appropriate value specified under recommended operating conditions.
‡ All typical values are at V_{CC} = 5 V, T_A = 25°C.
§ Not more than one output should be shorted at a time and duration of the short-circuit should not exceed one second.

switching characteristics, V_{CC} = 5 V, T_A = 25°C

PARAMETER¶	FROM (INPUT)	TO (OUTPUT)	TEST CONDITIONS	MIN	TYP	MAX	UNIT
f_{max}			See Note 2	50	70		MHz
t_{PLH}	CLK	Q_A' or Q_H'	R_L = 1 kΩ, C_L = 15 pF		12	20	ns
t_{PHL}					13	20	
t_{PHL}	$\overline{CLR}$	Q_A' or Q_H'			14	21	ns
t_{PLH}	CLK	Q_A thru Q_H	R_L = 280 Ω, C_L = 45 pF		15	21	ns
t_{PHL}					15	21	
t_{PHL}	$\overline{CLR}$	Q_A thru Q_H			16	24	ns
t_{PZH}	$\overline{G1}$, $\overline{G2}$	Q_A thru Q_H			10	18	ns
t_{PZL}					12	18	
t_{PHZ}	$\overline{G1}$, $\overline{G2}$	Q_A thru Q_H	R_L = 280 Ω, C_L = 5 pF		7	12	ns
t_{PLZ}					7	12	

¶ f_{max} = maximum clock frequency
t_{PLH} = Propagation delay time, low-to-high-level output
t_{PHL} = Propagation delay time, high-to-low-level output
t_{PZH} = output enable time to high level
t_{PZL} = output enable time to low level
t_{PHZ} = output disable time from high level
t_{PLZ} = output disable time from low level
NOTE 2: For testing f_{max}, all outputs are loaded simultaneously, each with C_L and R_L as specified for the propagation times.
Load circuits and voltage waveforms are shown in Section 1.

TEXAS INSTRUMENTS
POST OFFICE BOX 655012 • DALLAS, TEXAS 75265

D2418, DECEMBER 1978 – REVISED MARCH 1988

'LS320

- **Crystal-Controlled Oscillator Operation from 1 MHz to 20 MHz**
- 2-Phase Driver Outputs

'LS321

- **Similar to 'LS320 But Includes f/2 and f/4 Count-Down Outputs**

SN54LS320 . . . J OR W PACKAGE
SN74LS320 . . . N PACKAGE
(TOP VIEW)

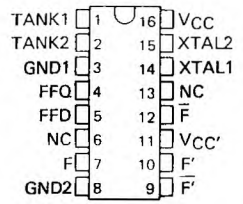

SN54LS321 . . . J PACKAGE
SN74LS321 . . . N PACKAGE
(TOP VIEW)

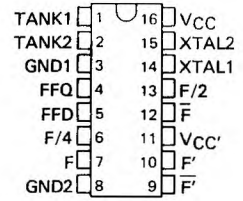

NC – No internal connection

For chip carrier information, contact the factory.

description

The 'LS320 is a crystal-controlled oscillator/clock driver. It features complementary standard and high-current driver outputs. A synchronization flip-flop is included.

The driver outputs, F' and $\overline{F}$' have very-low impedance and can be used to drive highly capacitive TTL-level lines. If the driver outputs are not used, then the V_{CC}' terminal can be left open.

The 'LS321 is identical to the 'LS320 except it additionally features two count-down outputs, F/2 and F/4.

These circuits were designed for crystal control of frequency and capacitive control is not recommended. If a fundamental crystal is used, an inductor of 5 to 160 μH is required to be connected between the tank 1 and tank 2 inputs. †

Interaction of the driver outputs with the other outputs limits useful frequencies as shown in the frequency-limits table.

The SN54LS320 and SN54LS321 are characterized for operation over the full military temperature range of −55°C to 125°C. The SN74LS320 and SN74LS321 are characterized for operation from 0°C to 70°C.

FREQUENCY LIMITS

OUTPUTS IN USE	V_{CC}	V_{CC}'	
Driver outputs only	5 V	5 V	2(
Other outputs only	5 V	Open	20 MHz
Driver and any other outputs	5 V	5 V	10 MHz

logic symbols‡

'LS320

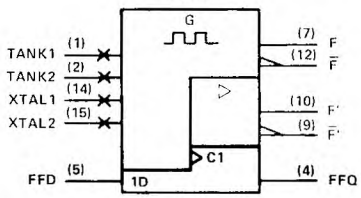

'LS321

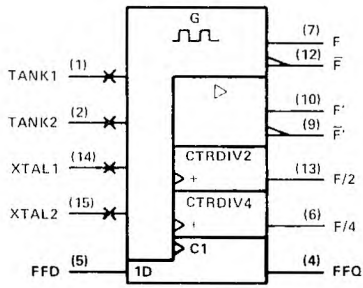

†The value of the inductor is selected from the graph in Figure 2. Use the next higher standard inductor value if the selected value is not available. If a third overtone crystal is used, a tuned tank is necessary. The center frequency of the tuned tank is determined by the equation $f = \frac{1}{2\pi\sqrt{LC}}$.

‡These symbols are in accordance with ANSI/IEEE Std. 91-1984 and IEC Publication 617-12.

PRODUCTION DATA documents contain information current as of publication date. Products conform to specifications per the terms of Texas Instruments standard warranty. Production processing does not necessarily include testing of all parameters.

logic diagram (positive logic)

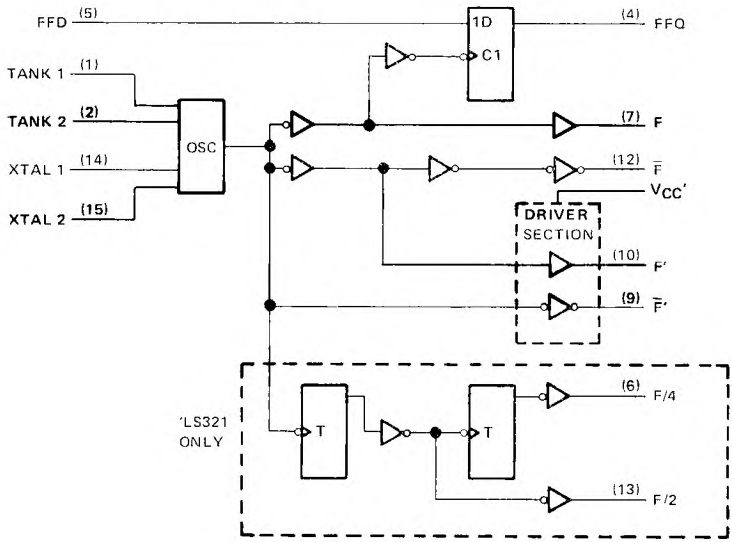

absolute maximum ratings over operating free-air temperature range (unless otherwise noted)

Supply voltage, V_{CC} (see Note 1) . . . . . 7 V
Supply voltage, V_{CC}' . . . . . 7 V
Input voltage to FFD terminal . . . . . −0.5 V to 7 V
Operating free-air temperature range: SN54LS320, SN54LS321 . . . . . −55°C to 125°C
SN74LS320, SN74LS321 . . . . . 0°C to 70°C
Storage temperature range . . . . . −65°C to 150°C

NOTE 1: Voltage values are with respect to network ground terminals.

recommended operating conditions

		SN54LS320 SN54LS321			SN74LS320 SN74LS321			UNIT
		MIN	NOM	MAX	MIN	NOM	MAX	
Supply voltage, V_{CC}		4.5	5	5.5	4.75	5	5.25	V
Supply voltage, V_{CC}'		4.5	5	5.5	4.75	5	5.25	V
High-level output current, I_{OH}	F' or F̄'			−12			−24	mA
	F, F̄, F/2, F/4			−0.4			−0.4	
Low-level output current, I_{OL}	F' or F̄'			12			24	mA
	F, F̄, F/2, F/4			4			8	
Output frequency, f_{out}	F/2 ('LS321)	0.5		10	0.5		10	MHz
	F/4 ('LS321)	0.25		5	0.25		5	
	F or F̄	1		20	1		20	
Operating free-air temperature, T_A		−55		125	0		70	°C

Input and output schematics are similar to those shown for SN74LS326.

TEXAS INSTRUMENTS
POST OFFICE BOX 655012 • DALLAS, TEXAS 75265

electrical characteristics over recommended operating free-air temperature range (unless otherwise noted)

PARAMETER			TEST CONDITIONS†			SN54LS320 SN54LS321			SN74LS320 SN74LS321			UNIT
						MIN	TYP‡	MAX	MIN	TYP‡	MAX	
V_{IH}	High-level input voltage					2			2			V
V_{IL}	Low-level input voltage							0.7			0.8	V
V_{IK}	Input clamp voltage		V_{CC} = MIN,	V_{CC}' = MIN,	I_I = −18 mA			−1.5			−1.5	V
V_{OH}	High-level output voltage	F′, $\overline{F}$′	V_{CC} = 4.5 V,	V_{CC}' = 4.5 V,	I_{OH} = −12 mA	2.4	3.3					V
			V_{CC} = 4.75 V,	V_{CC}' = 4.75 V,	I_{OH} = −24 mA				2.7	3.3		
		Others	V_{CC} = MIN,	V_{IH} = 2 V,	I_{OH} = −400 μA	2.4	3.4		2.7	3.4		
V_{OL}	Low-level output voltage	F′, $\overline{F}$′	V_{CC} = MIN,	V_{CC}' = MIN	I_{OL} = 12 mA		0.25	0.4		0.25	0.4	V
					I_{OL} = 24 mA					0.35	0.5	
		Others	V_{CC} = MIN,	V_{IL} = V_{IL} max	I_{OL} = 4 mA		0.25	0.4		0.25	0.4	
					I_{OL} = 8 mA					0.35	0.5	
I_I	Input current at maximum input voltage		V_{CC} = MAX,	V_I = 7 V				0.1			0.1	mA
I_{IH}	High-level input current		V_{CC} = MAX,	V_I = 2.7 V				20			20	μA
I_{IL}	Low-level input current		V_{CC} = MAX,	V_I = 0.4 V				−0.4			−0.4	mA
I_{OS}	Short-circuit output current§		V_{CC} = MAX			−20		−100	−20		−100	mA
I_{CC}	Supply current from V_{CC}		V_{CC} = MAX,	FFD at GND	'LS320		42	70		42	70	mA
					'LS321		47	75		47	75	
I_{CC}'	Supply current from V_{CC}'		V_{CC} = MAX,	V_{CC}' = MAX,	FFD at GND		4	8		4	8	mA

†For conditions shown as MIN or MAX, use the appropriate value specified under recommended operating conditions.
‡All typical values are at V_{CC} = 5 V, V_{CC}' = 5 V, and T_A = 25°C.
§Not more than one output should be shorted at a time, and duration of the short-circuit should not exceed one second. Outputs F′ and $\overline{F}$′ do not have short-circuit protection and these limits do not apply.

switching characteristics, V_{CC} = 5 V, V_{CC} = 5 V, T_A = 25°C

PARAMETER		OUTPUTS	TEST CONDITIONS¶		'LS320			'LS321			UNIT
					MIN	TYP	MAX	MIN	TYP	MAX	
f_{max}	Maximum operating frequency	F/2	C_L = 100 pF	R_L = 667 Ω				10	15		MHz
		F/4						5	7.5		
		All others		R_L = 2 kΩ	20	30		20	30		
t_r	Rise time, 1 V to 3 V	F′, F′	C_L = 50 pF	R_L = 667 Ω		6	12		6	12	ns
			C_L = 100 pF			7	14		7	14	
			C_L = 200 pF			7	14		7	14	
		Others	C_L = 50 pF	R_L = 2 kΩ		11	22		11	22	
			C_L = 100 pF			25	40		25	40	
			C_L = 200 pF			45	70		45	70	
t_f	Fall time, 3 V to 1 V	F′, F′	C_L = 50 pF	R_L = 667 Ω		5	10		5	10	ns
			C_L = 100 pF			5	10		5	10	
			C_L = 200 pF			6	12		6	12	
		Others	C_L = 50 pF	R_L = 2 kΩ		6	12		6	12	
			C_L = 100 pF			10	20		10	20	
			C_L = 200 pF			17	30		17	30	

¶Load circuits and voltage waveforms are shown in Section 1.

TYPICAL APPLICATION DATA

The SN54/74LS320 and 'LS321 are crystal-controlled oscillators. Figure 1 shows the device with all required *external* components.

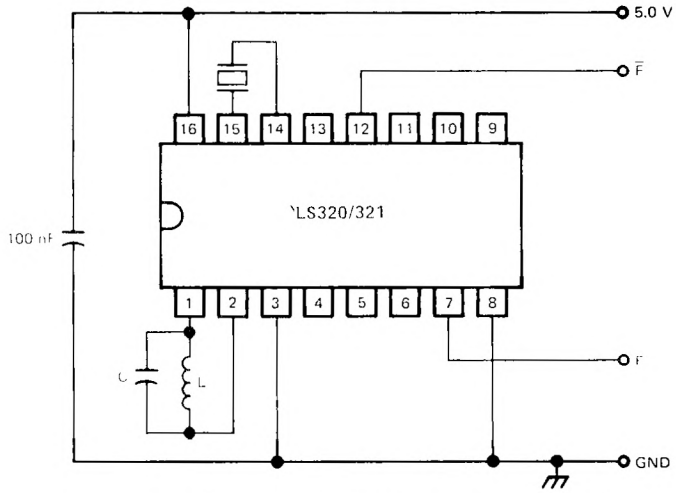

FIGURE 1. CRYSTAL-CONTROLLED OSCILLATOR 'LS320/321

1. Determination of C and L are as follows:
   a. Inductance L
      Select Inductance L according to Figure 2.
   b. Capacitor C

$$C = C_S - C_P - C_L$$

Where: C_P = parasitic board capacitance
C_L = parasitic capacitance of the inductor
L = inductance
C_S = required capacitance calculated as follows:

$$C_S = \frac{1}{(2 \cdot \pi \cdot f_Q)^2 \cdot L}$$

for $f_Q > 12$ MHz, C = 0 pf

2. Electrical characteristic for the crystal:
   The quartz crystal used as a frequency reference should be designed for series mode operation with a resistance in the 20 Ω to 75 Ω range and be capable of a minimum 2 mw power dissipation.

   It is recommended to use a tuned tank also for fundamental crystals.

TEXAS INSTRUMENTS
POST OFFICE BOX 655012 • DALLAS, TEXAS 75265

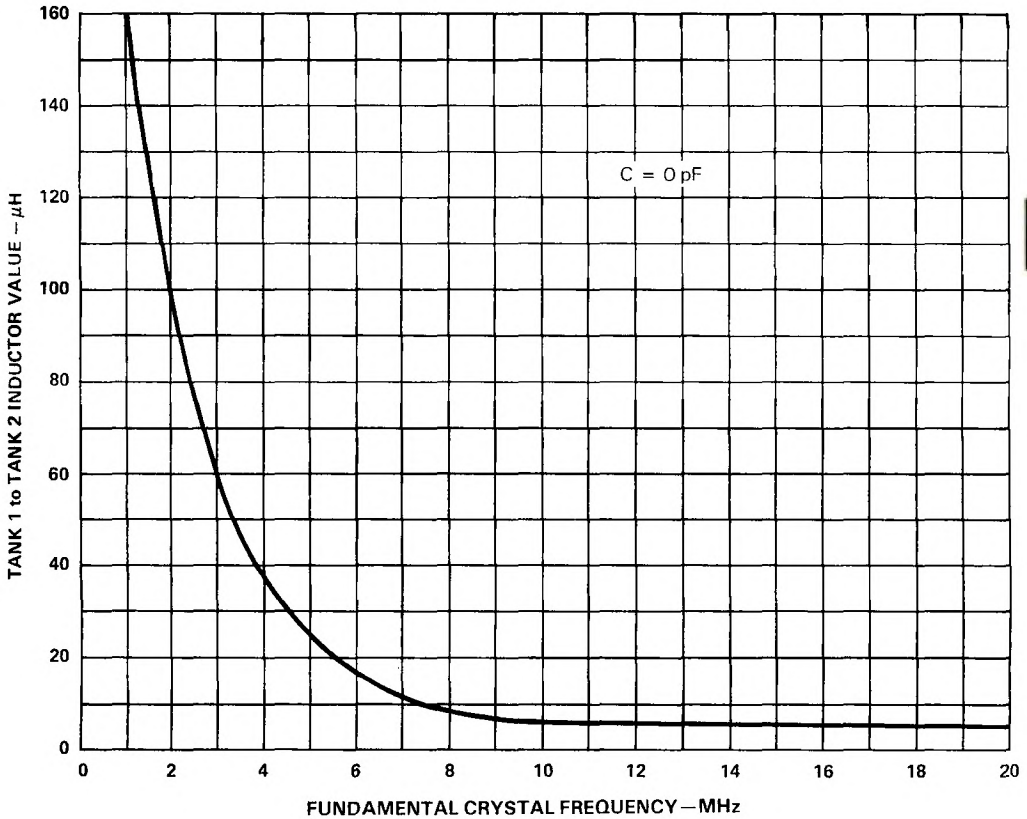
160
140
120
100
80
60
40
20
0
TANK 1 to TANK 2 INDUCTOR VALUE – μH
C = 0 pF
0
2
4
6
8
10
12
14
16
18
20
FUNDAMENTAL CRYSTAL FREQUENCY—MHz

FIGURE 2

D2411, OCTOBER 1977 — REVISED MARCH 1988

- **Multiplexed Inputs/Outputs Provide Improved Bit Density**
- **3-State Outputs Drive Bus Lines Directly**
- **Sign Extend Function**
- **Direct Overriding Clear**

SN54LS322A . . . J OR W PACKAGE
SN74LS322A . . . DW OR N PACKAGE
(TOP VIEW)

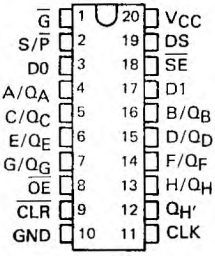

SN54LS322A . . . FK PACKAGE
(TOP VIEW)

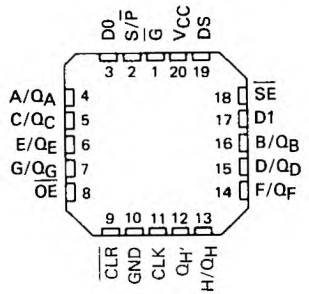

description

These low-power Schottky eight-bit shift registers feature multiplexed input/output data ports to achieve full eight-bit data handling in a single 20-pin package. Serial data may be entered into the shift-right register through either the D0 or the D1 input as selected by the data select input. A serial output ($Q_{H'}$) is also provided to facilitate expansion. Synchronous parallel loading is accomplished by taking both the register enable and the $S/\overline{P}$ inputs low. This places the three-state input/output ports in the data input mode. Data are entered on the low-to-high transition of the clock. The data extend function repeats the sign in the Q_A flip-flop during shifting. A direct overriding clear input clears the internal registers when taken low whether the outputs are enabled or off. The output enable does not interfere with synchronous operation of the register.

FUNCTION TABLE

OPERATION	INPUTS							INPUTS/OUTPUTS				OUTPUT
	$\overline{CLR}$	REGISTER ENABLE $\overline{G}$	$S/\overline{P}$	SIGN EXTEND $\overline{SE}$	DATA SELECT DS	OUTPUT ENABLE $\overline{OE}$	CLK	A/Q_A	B/Q_B	C/Q_C . . . H/Q_H		$Q_{H'}$
Clear	L	H	X	X	X	L	X	L	L	L	L	L
	L	X	H	X	X	L	X	L	L	L	L	L
Hold	H	H	X	X	X	L	X	Q_{A0}	Q_{B0}	Q_{C0}	Q_{H0}	Q_{H0}
Shift Right	H	L	H	H	L	L	↑	D0	Q_{An}	Q_{Bn}	Q_{Gn}	Q_{Gn}
	H	L	H	H	H	L	↑	D1	Q_{An}	Q_{Bn}	Q_{Gn}	Q_{Gn}
Sign Extend	H	L	H	L	X	L	↑	Q_{An}	Q_{An}	Q_{Bn}	Q_{Gn}	Q_{Gn}
Load	H	L	L	X	X	X	↑	a	b	c	h	h

When the output enable is high, the eight input/output terminals are disabled to the high-impedance state; however, sequential operation or clearing of the register is not affected. If both the register enable input and the $S/\overline{P}$ input are low while the clear input is low, the register is cleared while the eight input/output terminals are disabled to the high-impedance state.

H = high level (steady state)
L = low level (steady state)
X = irrelevant (any input, including transitions)
↑ = transition from low to high level
Q_{A0} . . . Q_{H0} = the level of Q_A through Q_H, respectively, before the indicated steady-state conditions were established
Q_{An} . . . Q_{Hn} = the level of Q_A through Q_H, respectively, before the most recent ↑ transition of the clock
D0, D1 = the level of steady-state inputs at inputs D0 and D1 respectively
a . . . h = the level of steady-state inputs at inputs A through H respectively

PRODUCTION DATA documents contain information current as of publication date. Products conform to specifications per the terms of Texas Instruments standard warranty. Production processing does not necessarily include testing of all parameters.

logic diagram (positive logic)

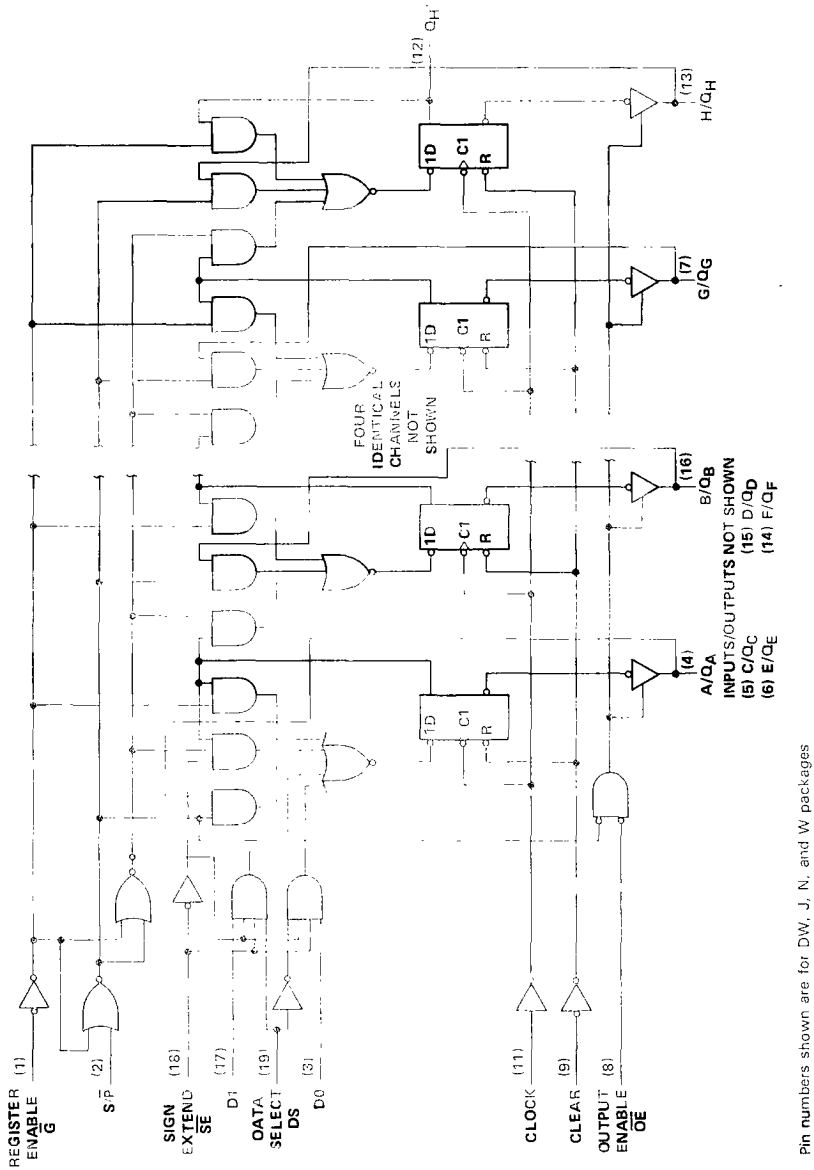

Pin numbers shown are for DW, J, N, and W packages

TEXAS INSTRUMENTS
POST OFFICE BOX 655012 • DALLAS, TEXAS 75265

logic symbol†

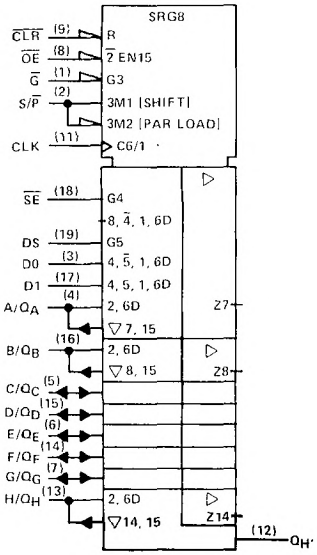

†This symbol is in accordance with ANSI/IEEE Std. 91-1984 and IEC Publication 617-12.
Pin numbers shown are for DW, J, N, and W packages.

schematics of inputs and outputs

EQUIVALENT OF EACH INPUT

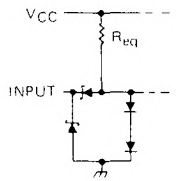

Sign extend	R_{eq}	6 kΩ NOM
Data select	R_{eq}	9 kΩ NOM
All other inputs	R_{eq}	18 kΩ NOM

TYPICAL OF OUTPUTS Q_A THRU Q_H

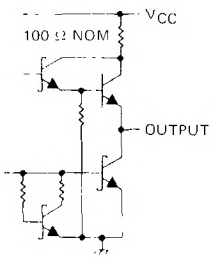

OUTPUT Q_H'

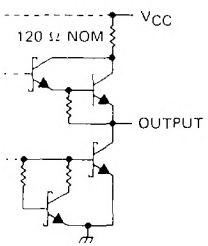

absolute maximum ratings over operating free-air temperature range (unless otherwise noted)

Supply voltage, V_{CC} (see Note 1) . . . . . 7 V
Input voltage . . . . . 7 V
Off-state output voltage . . . . . 7 V
Operating free-air temperature range: SN54LS322A . . . . . −55°C to 125°C
SN74LS322A . . . . . 0°C to 70°C
Storage temperature . . . . . −65°C to 150°C

NOTE 1: Voltage values are with respect to network ground terminal.

recommended operating conditions

			SN54LS322A			SN74LS322A			UNIT
			MIN	NOM	MAX	MIN	NOM	MAX	
V_{CC}	Supply voltage		4.5	5	5.5	4.75	5	5.25	V
V_{IH}	High-level input voltage		2			2			V
V_{IL}	Low-level input voltage				0.7			0.5	V
I_{OH}	High-level output current	Q_A thru Q_H			−1			−2.6	mA
		Q_H'			−0.4			−0.4	
I_{OL}	Low-level output current	Q_A thru Q_H			12			24	mA
		Q_H'			4			8	
f_{clock}	Clock frequency		0		20	0		20	MHz
$t_{w(clock)}$	Width of clock pulse	Clock high	30			30			ns
		Clock low	10			10			
$t_{w(clear)}$		Clear low	20			20			ns
t_{su}	Setup time	Data select	10↑			10↑			ns
		High-level data†	20↑			20↑			
		Low-level data†	20↑			20↑			
		Clear inactive-state	20↑			20↑			
		Register enable $\overline{G}$ high	35↑			35↑			
		Register enable $\overline{G}$ low	50↑			50↑			
t_h	Hold time	Data select	10↑			10↑			ns
		Data†	2↑			2↑			
		Register enable high or low	0↑			0↑			
T_A	Operating free-air temperature		−55		125	0		70	°C

†Data includes the two serial inputs and the eight input/output data lines.
‡The arrow indicates that the rising edge of the clock pulse is used for reference.

TEXAS INSTRUMENTS
POST OFFICE BOX 655012 • DALLAS, TEXAS 75265

electrical characteristics over recommended operating free-air temperature range (unless otherwise noted)

PARAMETER		TEST CONDITIONS†		SN54LS322A			SN74LS322A			UNIT
				MIN	TYP‡	MAX	MIN	TYP‡	MAX	
V_{IK}		V_{CC} = MIN, I_I = −18 mA				−1.5			−1.5	V
V_{OH}	Q_A thru Q_H	V_{CC} = MIN, V_{IH} = 2 V, V_{IL} = MAX, I_{OH} = MAX		2.4	3.2		2.4	3.1		V
	Q_H'			2.5	3.4		2.7	3.4		
V_{OL}	Q_A thru Q_H	V_{CC} = MIN, V_{IH} = 2 V, V_{IL} = MAX	I_{OL} = 12 mA		0.25	0.4		0.25	0.4	V
			I_{OL} = 24 mA					0.35	0.5	
	Q_H'		I_{OL} = 4 mA		0.25	0.4		0.25	0.4	
			I_{OL} = 8 mA					0.35	0.5	
I_{OZH}	Q_A thru Q_H	V_{CC} = MAX, V_{IH} = 2 V, V_O = 2.7 V				40			40	μA
I_{OZL}	Q_A thru Q_H	V_{CC} = MAX, V_{IH} = 2 V, V_O = 0.4 V				−0.4			−0.4	mA
I_I	A thru H	V_{CC} = MAX	V_I = 5.5 V			0.1			0.1	mA
	Data select		V_I = 7 V			0.2			0.2	
	Sign extend		V_I = 7 V			0.3			0.3	
	Any other		V_I = 7 V			0.1			0.1	
I_{IH}	A thru H, DS	V_{CC} = MAX, V_I = 2.7 V				40			40	μA
	Sign extend					60			60	
	Any other					20			20	
I_{IL}	Data select	V_{CC} = MAX, V_I = 0.4 V				−0.8			−0.8	mA
	Sign extend					−1.2			−1.2	
	Any other					−0.4			−0.4	
I_{OS}§	Q_A thru Q_H	V_{CC} = MAX, V_O = 2.25 V (for 54LS only)		−15		−65	−30		−130	mA
	Q_H'			−10		−50	−20		−100	
I_{CC}		V_{CC} = MAX			35	60		35	60	mA

† For conditions shown as MIN or MAX, use the appropriate value specified under recommended operating conditions.
‡ All typical values are at V_{CC} = 5 V, T_A = 25°C.
§ Not more than one output should be shorted at a time and duration of the short-circuit should not exceed one second.

switching characteristics, V_{CC} = 5 V, T_A = 25°C

PARAMETER¶	FROM (INPUT)	TO (OUTPUT)	TEST CONDITIONS	MIN	TYP	MAX	UNIT
f_{max}			See Note 2	20	35		MHz
t_{PLH}	CLK	Q_H'	R_L = 2 kΩ, C_L = 15 pF, See Note 2		22	33	ns
t_{PHL}					26	35	
t_{PHL}	$\overline{CLR}$	Q_H'			27	35	ns
t_{PLH}	CLK	Q_A thru Q_H	R_L = 665 Ω, C_L = 45 pF, See Note 2		16	25	ns
t_{PHL}					22	33	
t_{PHL}	$\overline{CLR}$	Q_A thru Q_H			22	35	ns
t_{PZH}	$\overline{OE}$	Q_A thru Q_H			15	35	ns
t_{PZL}					15	35	
t_{PHZ}	$\overline{OE}$	Q_A thru Q_H	R_L = 665 Ω, C_L = 5 pF, See Note 2		15	25	ns
t_{PLZ}					15	25	

¶ f_{max} = maximum clock frequency
t_{PLH} = propagation delay time, low-to-high-level output
t_{PHL} = propagation delay time, high-to-low-level output
t_{PZH} = output enable time to high level
t_{PZL} = output enable time to low level
t_{PHZ} = output disable time from high level
t_{PLZ} = output disable time from low level

NOTE 2: For testing f_{max}, all outputs are loaded simultaneously, each with C_L and R_L as specified for the propagation times. Load circuits and voltage waveforms are shown in Section 1.

OCTOBER 1976 - REVISED MARCH 1988

- Multiplexed Inputs/Outputs Provide Improved Bit Density
- Four Modes of Operation:
  Hold (Store) Shift Left
  Shift Right Load Data
- Operates with Outputs Enabled or at High Z
- 3-State Outputs Drive Bus Lines Directly
- Can Be Cascaded for N-Bit Word Lengths
- Typical Power Dissipation . . . 175 mW
- Exceptionally Stable Shift (Clock) Frequency . . . 25 MHz
- Applications:
  Stacked or Push-Down Registers,
  Buffer Storage, and
  Accumulator Registers
- SN54LS299 and SN74LS299 Are Similar But Have Direct Overriding Clear

SN54LS323 . . . J OR W PACKAGE
SN74LS323 . . . DW OR N PACKAGE
(TOP VIEW)

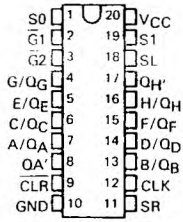

SN54LS323 . . . FK PACKAGE
(TOP VIEW)

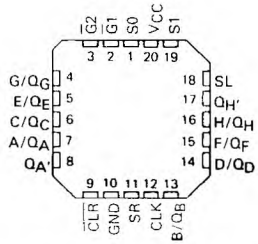

description

These Low-Power Schottky eight-bit universal registers feature multiplexed inputs/outputs to achieve full eight-bit data handling in a single 20-pin package. Two function-select inputs and two output-control inputs can be used to choose the modes of operation listed in the function table. Synchronous parallel loading is accomplished by taking both function-select lines, S0 and S1, high. This places the three-state outputs in a high-impedance state, which permits data that is applied on the input/output lines to be clocked into the register. Reading out of the register can be accomplished while the outputs are enabled in any mode. The clear function is synchronous, and a low level at the clear input clears the register on the next low-to-high transition of the clock.

FUNCTION TABLE

MODE	INPUTS								INPUTS/OUTPUTS								OUTPUTS	
	$\overline{CLR}$	FUNCTION SELECT S1	FUNCTION SELECT S0	OUTPUT CONTROL $\overline{G1}$	OUTPUT CONTROL $\overline{G2}$†	CLK	SERIAL SL	SERIAL SR	A/Q_A	B/Q_B	C/Q_C	D/Q_D	E/Q_E	F/Q_F	G/Q_G	H/Q_H	Q_A'	Q_H'
Clear	L	X	L	L	L	↑	X	X	L	L	L	L	L	L	L	L	L	L
	L	L	X	L	L	↑	X	X	L	L	L	L	L	L	L	L	L	L
	L	H	H	X	X	↑	X	X	X	X	X	X	X	X	X	X	L	L
Hold	H	L	L	L	L	X	X	X	Q_{A0}	Q_{B0}	Q_{C0}	Q_{D0}	Q_{E0}	Q_{F0}	Q_{G0}	Q_{H0}	Q_{A0}	Q_{H0}
	H	X	X	L	L	L	X	X	Q_{A0}	Q_{B0}	Q_{C0}	Q_{D0}	Q_{E0}	Q_{F0}	Q_{G0}	Q_{H0}	Q_{A0}	Q_{H0}
Shift Right	H	L	H	L	L	↑	X	H	H	Q_{An}	Q_{Bn}	Q_{Cn}	Q_{Dn}	Q_{En}	Q_{Fn}	Q_{Gn}	H	Q_{Gn}
	H	L	H	L	L	↑	X	L	L	Q_{An}	Q_{Bn}	Q_{Cn}	Q_{Dn}	Q_{En}	Q_{Fn}	Q_{Gn}	L	Q_{Gn}
Shift Left	H	H	L	L	L	↑	H	X	Q_{Bn}	Q_{Cn}	Q_{Dn}	Q_{En}	Q_{Fn}	Q_{Gn}	Q_{Hn}	H	Q_{Bn}	H
	H	H	L	L	L	↑	L	X	Q_{Bn}	Q_{Cn}	Q_{Dn}	Q_{En}	Q_{Fn}	Q_{Gn}	Q_{Hn}	L	Q_{Bn}	L
Load	H	H	H	X	X	↑	X	X	a	b	c	d	e	f	g	h	a	h

†When one or both output controls are high the eight input/output terminals are disabled to the high-impedance state, however, sequential operation or clearing of the register is not affected

a . . . h = the level of the steady state input at inputs A through H, respectively. These data are loaded into the flip flops while the flip flop outputs are isolated from the input/output terminals.

PRODUCTION DATA documents contain information current as of publication date. Products conform to specifications per the terms of Texas Instruments standard warranty. Production processing does not necessarily include testing of all parameters.

logic symbol†

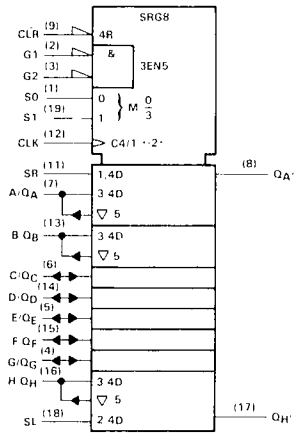

†This symbol is in accordance with ANSI/IEEE Std. 91-1984 and IEC Publication 617-12.
Pin numbers shown are for DW, J, N, and W packages.

logic diagram (positive logic)

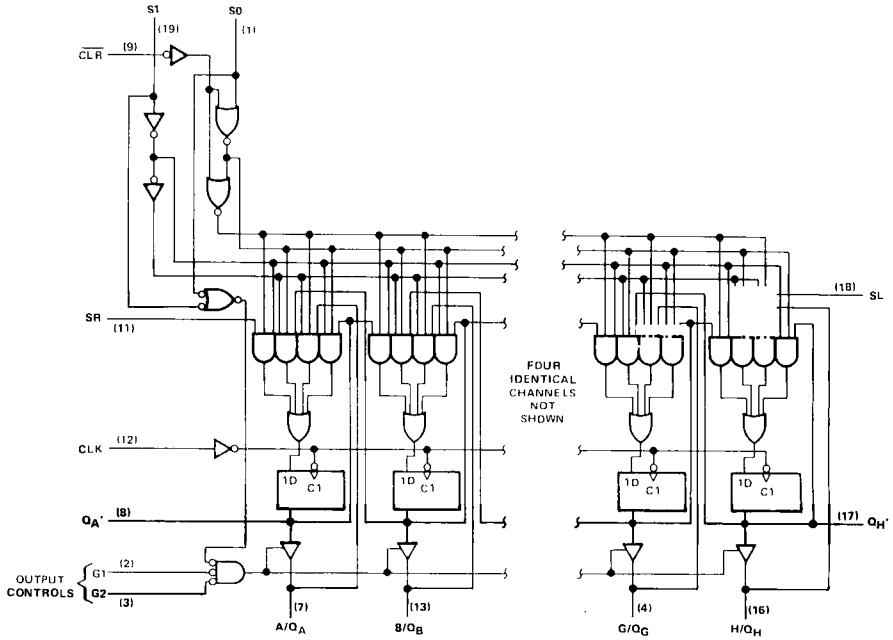

Pin numbers shown are for DW, J, N, and W packages.

TEXAS INSTRUMENTS
POST OFFICE BOX 655012 • DALLAS, TEXAS 75265

schematics of inputs and outputs, absolute maximum ratings, recommended operating conditions, and electrical characteristics

Same as SN54LS299 and SN74LS299, except t_{su} (Clear Inactive) does not apply.

switching characteristics, V_{CC} = 5 V, T_A = 25°C

PARAMETER†	FROM (INPUT)	TO (OUTPUT)	TEST CONDITIONS	MIN	TYP	MAX	UNIT
f_{max}			See Note 1	25	35		MHz
t_{PLH}	CLK	$Q_{A'}$ or $Q_{H'}$	C_L = 15 pF, R_L = 2 kΩ		22	33	ns
t_{PHL}					26	39	
t_{PLH}	CLK	Q_A thru Q_H	C_L = 45 pF, R_L = 665 Ω		17	25	ns
t_{PHL}					25	39	
t_{PZH}	$\overline{G}1$, $\overline{G}2$	Q_A thru Q_H			14	21	ns
t_{PZL}					20	30	
t_{PHZ}	$\overline{G}1$, $\overline{G}2$	Q_A thru Q_H	C_L = 5 pF, R_L = 665 Ω		10	20	ns
t_{PLZ}					10	15	

† t_{max} = maximum clock frequency
t_{PLH} = Propagation delay time, low-to-high-level output
t_{PHL} = Propagation delay time, high-to-low-level output
t_{PZH} = Output enable time to high level
t_{PZL} = Output enable time to low level
t_{PHZ} = Output disable time from high level
t_{PLZ} = Output disable time from low level

NOTE 1: For testing f_{max}, all outputs are loaded simultaneously, each with C_L and R_L as specified for the propagation times. Load circuits and voltage waveforms are shown in Section 1.

- 3-State Outputs Drive Bus Lines Directly
- Encodes 8 Data Lines to 3-Line Binary (Octal)
- Applications Include:
  N-Bit Encoding
  Code Converters and Generators
- Typical Data Delay . . . 15 ns
- Typical Power Dissipation . . . 60 mW

SN54LS348 . . . J OR W PACKAGE
SN74LS348 . . . D OR N PACKAGE
(TOP VIEW)

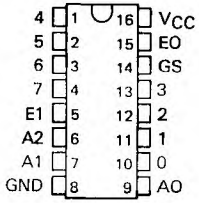

SN54LS348 . . . FK PACKAGE
(TOP VIEW)

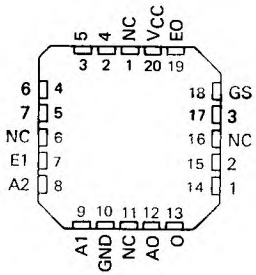

NC – No internal connection

description

These TTL encoders feature priority decoding of the inputs to ensure that only the highest-order data line is encoded. The 'LS348 circuits encode eight data lines to three-line (4-2-1) binary (octal). Cascading circuitry (enable input E1 and enable output EO) has been provided to allow octal expansion. Outputs A0, A1, and A2 are implemented in three-state logic for easy expansion up to 64 lines without the need for external circuitry. See Typical Application Data.

FUNCTION TABLE

INPUTS									OUTPUTS				
EI	0	1	2	3	4	5	6	7	A2	A1	A0	GS	EO
H	X	X	X	X	X	X	X	X	Z	Z	Z	H	H
L	H	H	H	H	H	H	H	H	Z	Z	Z	H	L
L	X	X	X	X	X	X	X	L	L	L	L	L	H
L	X	X	X	X	X	X	L	H	L	L	H	L	H
L	X	X	X	X	X	L	H	H	L	H	L	L	H
L	X	X	X	X	L	H	H	H	L	H	H	L	H
L	X	X	X	L	H	H	H	H	H	L	L	L	H
L	X	X	L	H	H	H	H	H	H	L	H	L	H
L	X	L	H	H	H	H	H	H	H	H	L	L	H
L	L	H	H	H	H	H	H	H	H	H	H	L	H

H = high logic level, L = low logic level, X = irrelevant
Z = high-impedance state

logic symbol†

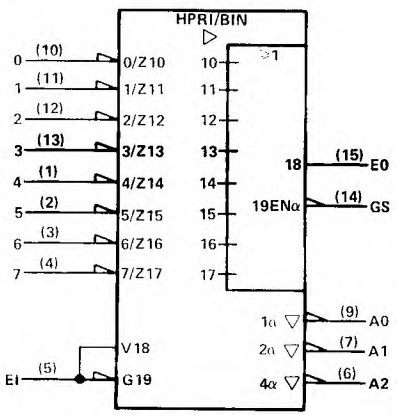

†This symbol is in accordance with ANSI/IEEE Std. 91-1984 and IEC Publication 617-12.
Pin numbers shown are for D, J, N, and W packages.

PRODUCTION DATA documents contain information current as of publication date. Products conform to specifications per the terms of Texas Instruments standard warranty. Production processing does not necessarily include testing of all parameters.

logic diagram (positive logic)

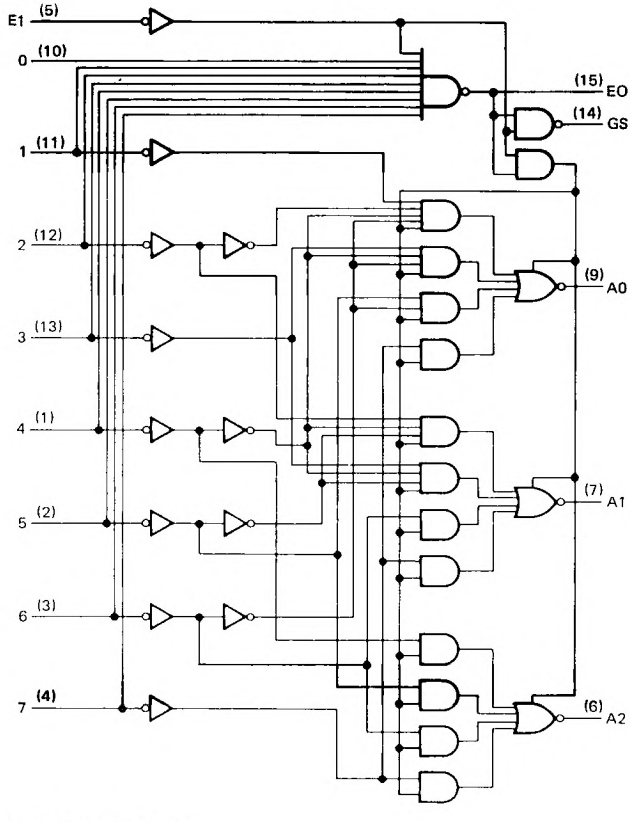

Pin numbers shown are for D, J, N, and W packages.

schematic of inputs and outputs

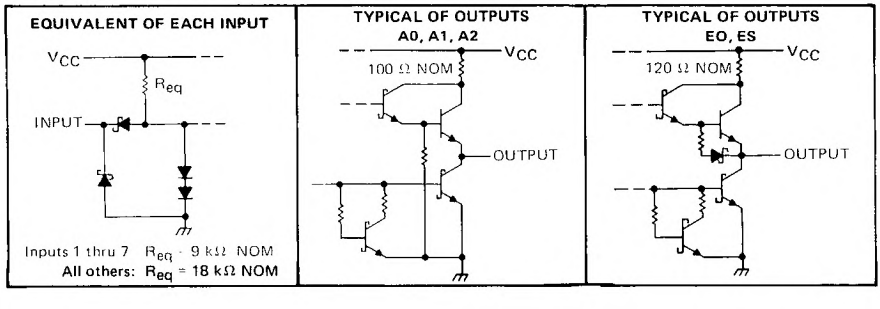

TEXAS INSTRUMENTS
POST OFFICE BOX 655012 • DALLAS, TEXAS 75265

absolute maximum ratings over operating free-air temperature range (unless otherwise noted)

Supply voltage, V_{CC} (see Note 1) . . . . . 7 V
Input voltage . . . . . 7 V
Operating free-air temperature range: SN54LS348 . . . . . −55°C to 125°C
SN74LS348 . . . . . 0°C to 70°C
Storage temperature range . . . . . −65°C to 150°C

NOTE 1: Voltage values are with respect to network ground terminal.

recommended operating conditions

		SN54LS348			SN74LS348			UNIT
		MIN	NOM	MAX	MIN	NOM	MAX	
Supply voltage, V_{CC}		4.5	5	5.5	4.75	5	5.25	V
High-level output current, I_{OH}	A0, A1, A2			−1			−2.6	mA
	EO, GS			−400			−400	μA
Low-level output current, I_{OL}	A0, A1, A2			12			24	mA
	EO, GS			4			8	mA
Operating free-air temperature, T_A		−55		125	0		70	°C

electrical characteristics over recommended operating free-air temperature range (unless otherwise noted)

PARAMETER			TEST CONDITIONS†		SN54LS348			SN74LS348			UNIT
					MIN	TYP‡	MAX	MIN	TYP‡	MAX	
V_{IH}	High-level input voltage				2			2			V
V_{IL}	Low-level input voltage						0.7			0.8	V
V_{IK}	Input clamp voltage		V_{CC} = MIN,	I_I = −18 mA			−1.5			−1.5	V
V_{OH}	High-level output voltage	A0, A1, A2	V_{CC} = MIN, V_{IH} = 2 V, V_{IL} = V_{IL}max	I_{OH} = −1 mA	2.4	3.1					V
				I_{OH} = −2.6 mA				2.4	3.1		
		EO, GS		I_{OH} = −400 μA	2.5	3.4		2.7	3.4		
V_{OL}	Low-level Output voltage	A0, A1, A2	V_{CC} = MIN, V_{IH} = 2 V, V_{IL} = V_{IL}max	I_{OL} = 12 mA		0.25	0.4		0.25	0.4	V
				I_{OL} = 24 mA					0.35	0.5	
		EO, GS		I_{OL} = 4 mA		0.25	0.4		0.25	0.4	
				I_{OL} = 8 mA					0.35	0.5	
I_{OZ}	Off-State (high-impedance state) output current	A0, A1, A2	V_{CC} = MAX, V_{IH} = 2 V	V_O = 2.7 V			20			20	μA
				V_O = 0.4 V			−20			−20	
I_I	Input current at maximum input voltage	Inputs 1 thru 7	V_{CC} = MAX,	V_I = 7 V			0.2			0.2	mA
		All other inputs					0.1			0.1	
I_{IH}	High-level input current	Inputs 1 thru 7	V_{CC} = MAX,	V_I = 2.7 V			40			40	μA
		All other inputs					20			20	
I_{IL}	Low-level input current	Inputs 1 thru 7	V_{CC} = MAX,	V_I = 0.4 V			−0.8			−0.8	mA
		All other inputs					−0.4			−0.4	
I_{OS}	Short-circuit output current§	Outputs A0, A1, A2	V_{CC} = MAX		−30		−130	−30		−130	mA
		Outputs EO, GS			−20		−100	−20		−100	
I_{CC}	Supply current		V_{CC} = MAX, See Note 2	Condition 1		13	25		13	25	mA
				Condition 2		12	23		12	23	

†For conditions shown as MIN or MAX, use the appropriate value specified under recommended operating conditions.
‡All typical values are at V_{CC} = 5 V, T_A = 25°C.
§Not more than one output should be shorted at a time.

NOTE 2: I_{CC} (condition 1) is measured with inputs 7 and EI grounded, other inputs and outputs open. I_{CC} (condition 2) is measured with all inputs and outputs open.

switching characteristics, V_{CC} = 5 V, T_A = 25°C

PARAMETER†	FROM (INPUT)	TO (OUTPUT)	WAVEFORM	TEST CONDITIONS	MIN	TYP	MAX	UNIT
t_{PLH}	1 thru 7	A0, A1, or A2	In-phase output	C_L = 45 pF, R_L = 667 Ω, See Note 3		11	17	ns
t_{PHL}						20	30	
t_{PLH}	1 thru 7	A0, A1, or A2	Out-of-phase output			23	35	ns
t_{PHL}						23	35	
t_{PZH}	EI	A0, A1, or A2				25	39	ns
t_{PZL}						24	41	
t_{PLH}	0 thru 7	EO	Out-of-phase output	C_L = 15 pF, R_L = 2 kΩ, See Note 3		11	18	ns
t_{PHL}						26	40	
t_{PLH}	0 thru 7	GS	In-phase output			38	55	ns
t_{PHL}						9	21	
t_{PLH}	EI	GS	In-phase output			11	17	ns
t_{PHL}						14	36	
t_{PLH}	EI	EO	In-phase output			17	26	ns
t_{PHL}						25	40	
t_{PHZ}	EI	A0, A1, or A2		C_L = 5 pF, R_L = 667 Ω		18	27	ns
t_{PLZ}						23	35	

† t_{PLH} = propagation delay time, low-to-high-level output
t_{PHL} = propagation delay time, high-to-low-level output
t_{PZH} = output enable time to high level
t_{PZL} = output enable time to low level
t_{PHZ} = output disable time from high level
t_{PLZ} = output disable time from low level

NOTE 3: Load circuits and voltage waveforms are shown in Section 1.

TYPICAL APPLICATION DATA

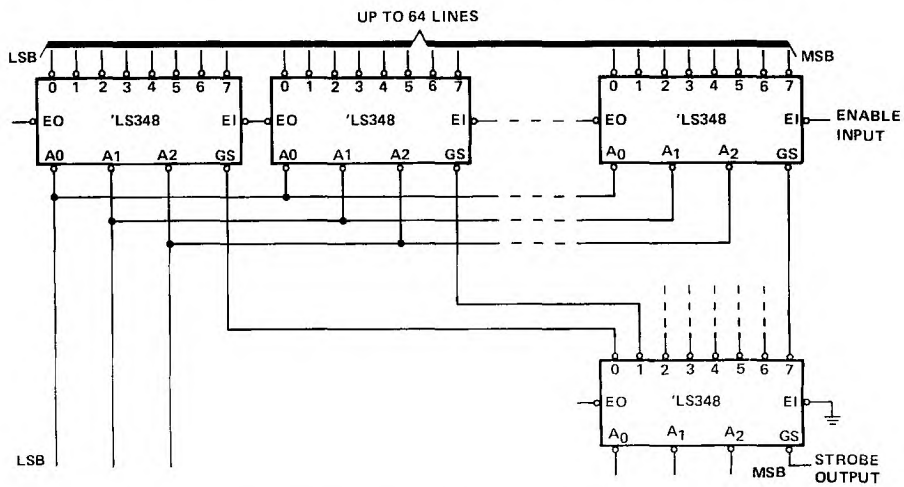

FIGURE 1–PRIORITY ENCODER WITH UP TO 64 INPUTS.

TEXAS INSTRUMENTS
POST OFFICE BOX 655012 • DALLAS, TEXAS 75265

D2745, DECEMBER 1983 – REVISED MARCH 1988

- **Shifts 4-Bits of Data to 0, 1, 2 or 3 Places Under Control of Two Select Lines**
- **Three-State Outputs for Bus Organized Systems**
- **6.5 ns Typical Data Propagation Delay**

description

The 'S350 is operationally equivalent to a 4-input multiplexer with the inputs connected so that the select code causes shifts of the data word. This makes it possible to perform shifts of 0, 1, 2, or 3 places on words of any length, with suitable interconnection.

A 7-bit data word is introduced at the D inputs and is shifted according to the code applied to the select inputs S0 and S1. Y0 through Y3 are 3-state outputs controlled by an output enable, $\overline{OE}$. When $\overline{OE}$ is low, the outputs follow the selected data inputs; when $\overline{OE}$ is high, the outputs are in a high-impedance state. This feature allows shifters to be cascaded on the same output lines or to a common bus. The shift function can be logical with zeroes pulled in at either or both ends of the shifting field, arithmetic with the sign bit repeated during a shift down, or end-around with the data word forming a continuous loop.

FUNCTION TABLE

INPUTS			OUTPUTS			
$\overline{OE}$	S1	S0	Y0	Y1	Y2	Y3
H	X	X	Z	Z	Z	Z
L	L	L	D0	D1	D2	D3
L	L	H	D-1	D0	D1	D2
L	H	L	D-2	D-1	D0	D1
L	H	H	D-3	D-2	D-1	D0

SN54S350 . . . J PACKAGE
SN74S350 . . . D OR N PACKAGE
(TOP VIEW)

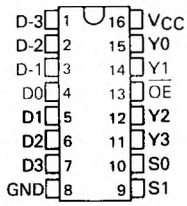

SN54S350 . . . FK PACKAGE
(TOP VIEW)

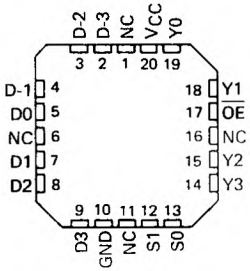

NC - No internal connection

logic equations

$Y0 = \overline{S0}\,\overline{S1}\,D0 + S0\,\overline{S1}\,D\text{-}1 + \overline{S0}\,S1\,D\text{-}2 + S0\,S1\,D\text{-}3$

$Y1 = \overline{S0}\,\overline{S1}\,D1 + S0\,\overline{S1}\,D0 + \overline{S0}\,S1\,D\text{-}1 + S0\,S1\,D\text{-}2$

$Y2 = \overline{S0}\,\overline{S1}\,D2 + S0\,\overline{S1}\,D1 + \overline{S0}\,S1\,D0 + S0\,S1\,D\text{-}1$

$Y3 = \overline{S0}\,\overline{S1}\,D3 + S0\,\overline{S1}\,D2 + \overline{S0}\,S1\,D1 + S0\,S1\,D0$

PRODUCTION DATA documents contain information current as of publication date. Products conform to specifications per the terms of Texas Instruments standard warranty. Production processing does not necessarily include testing of all parameters.

logic diagram (positive logic)

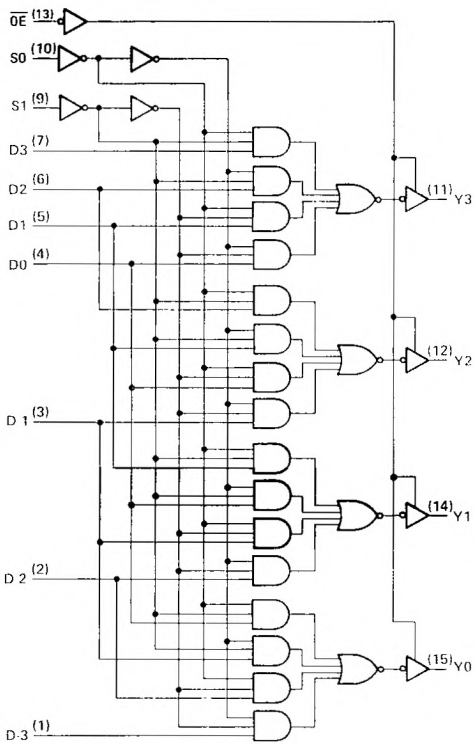

logic symbol†

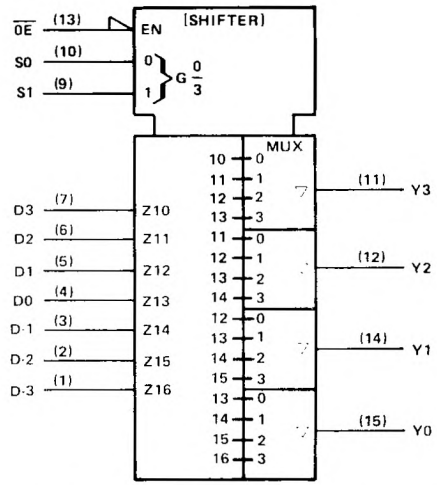

†This symbol is in accordance with ANSI/IEEE Std. 91-1984 and IEC Publication 617-12.
Pin numbers shown are for DW, J, and N packages.

schematics of inputs and outputs

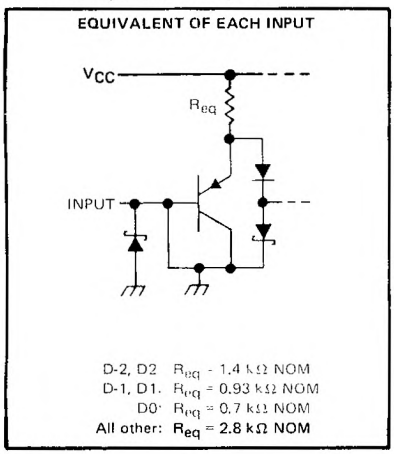

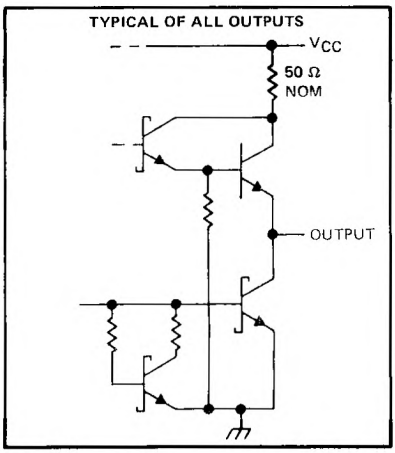

TEXAS INSTRUMENTS
POST OFFICE BOX 655012 • DALLAS, TEXAS 75265

absolute maximum ratings over operating free-air temperature range (unless otherwise noted)

Supply voltage, V_{CC} (see Note 1) . . . . . 7 V
Input voltage . . . . . 5.5 V
Voltage applied to a disabled 3-state output . . . . . 5.5 V
Operating free-air temperature range: SN54S350 . . . . . −55°C to 125°C
SN74S350 . . . . . 0°C to 70°C
Storage temperature range . . . . . −65°C to 150°C

NOTE 1: Voltage values are with respect to network ground terminal.

recommended operating conditions

		SN54S350			SN74S350			UNIT
		MIN	NOM	MAX	MIN	NOM	MAX	
V_{CC}	Supply voltage	4.5	5	5.5	4.75	5	5.25	V
V_{IH}	High-level input voltage	2			2			V
V_{IL}	Low-level input voltage			0.8			0.8	V
I_{OH}	High-level output current			−2			−6.5	mA
I_{OL}	Low-level output current			20			20	mA
T_A	Operating free-air temperature	−55		125	0		70	°C

electrical characteristics over recommended operating free-air temperature range (unless otherwise noted)

PARAMETER		TEST CONDITIONS†	SN54S350			SN74S350			UNIT
			MIN	TYP	MAX	MIN	TYP	MAX	
V_{IK}		V_{CC} = MIN, I_I = −18 mA			−1.2			−1.2	V
V_{OH}		V_{CC} = MIN, V_{IH} = 2 V, V_{IL} = 0.8 V, I_{OH} = MAX	2.4	3.4		2.4	3.4		V
V_{OL}		V_{CC} = MIN, V_{IH} = 2 V, V_{IL} = 0.8 V, I_{OL} = 20 mA			0.5			0.5	V
I_{OZH}		V_{CC} = MAX, V_O = 2.4 V			50			50	μA
I_{OZL}		V_{CC} = MAX, V_O = 0.5 V			−50			−50	μA
I_I		V_{CC} = MAX, V_I = 5.5 V			1			1	mA
I_{IH}	D-2, D-1, D-0, D1, D2 inputs	V_{CC} = MAX, V_I = 2.7 V			75			75	μA
	All others				50			50	
I_{IL}	D-2, D-1 D-0, D1, D2 inputs	V_{CC} = MAX, V_I = 0.5 V			−3			−3	mA
	All others				−2			−2	
I_{OS}§		V_{CC} = MAX, V_O = 0	−40		−100	−40		−100	mA
I_{CC}		V_{CC} = MAX, V_I = 0 All inputs = GND		60	85		60	85	mA

† For conditions shown as MIN or MAX, use the appropriate value specified under recommended operating conditions.
‡ All typical values are at V_{CC} = 5 V, T_A = 25°C.
§ Not more than one output should be shorted at a time, and duration of the short-circuit should not exceed one second.

switching characteristics, V_{CC} = 5 V, T_A = 25°C (see note 2)

PARAMETER	FROM (INPUT)	TO (OUTPUT)	TEST CONDITIONS	MIN	TYP	MAX	UNIT
t_{PLH}	Data	Any Y	R_L = 280 Ω, C_L = 15 pF		5	9	ns
t_{PHL}					8	12	ns
t_{PLH}	Select	Any Y			11	17	ns
t_{PHL}					13	20	ns
t_{PZH}	$\overline{OE}$	Any Y				19.5	ns
t_{PZL}						21	ns
t_{PHZ}	$\overline{OE}$	Any Y	R_L = 280 Ω, C_L = 5 pF		8	13	ns
t_{PLZ}					10	15	ns

NOTE 2: Load circuits and voltage waveforms are shown in Section 1.

TEXAS INSTRUMENTS
POST OFFICE BOX 655012 • DALLAS, TEXAS 75265

TYPICAL APPLICATION DATA

16-Bit Shift-Up 0 to 3 Places, Zero Backfill

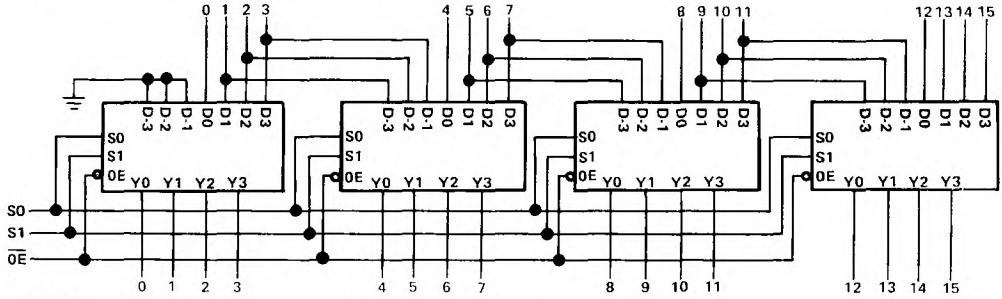

S1	S0	
L	L	NO SHIFT
L	H	SHIFT 1 PLACE
H	L	SHIFT 2 PLACES
H	H	SHIFT 3 PLACES

8-Bit End-Around Shift 0 to 7 Places

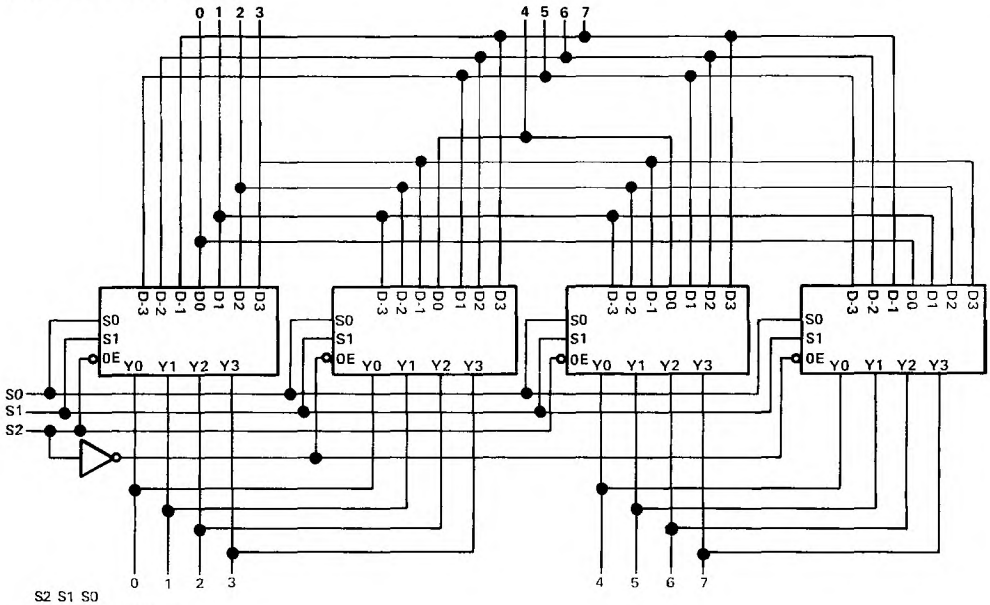

S2	S1	S0	
L	L	L	NO SHIFT
L	L	H	SHIFT END AROUND 1
L	H	L	SHIFT END AROUND 2
L	H	H	SHIFT END AROUND 3
H	L	L	SHIFT END AROUND 4
H	L	H	SHIFT END AROUND 5
H	H	L	SHIFT END AROUND 6
H	H	H	SHIFT END AROUND 7

TYPICAL APPLICATION DATA

13-Bit Twos Complement Scaler

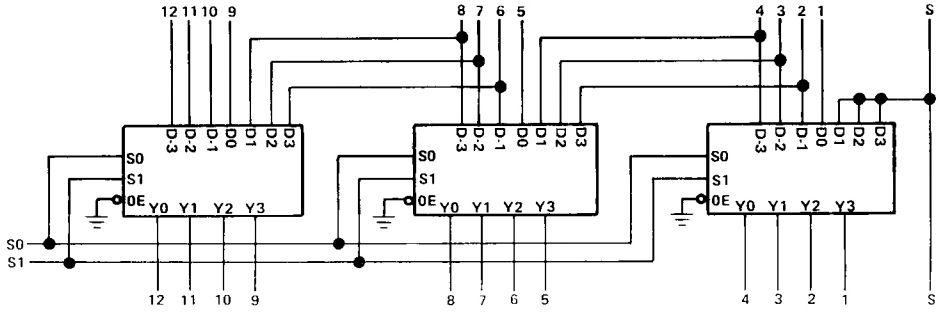

S1	S0		SCALE
L	L	÷ 8	1/8
H	H	÷ 4	1/4
H	L	÷ 2	1/2
H	H	NO CHANGE	1

TEXAS INSTRUMENTS
POST OFFICE BOX 655012 • DALLAS, TEXAS 75265

OCTOBER 1976 – REVISED MARCH 1988

- **Inverting Versions of SN54LS153, SN74LS153**
- **Schottky-Diode-Clamped Transistors**
- **Permits Multiplexing from N lines to 1 line**
- **Performs Parallel-to-Serial Conversion**
- **Typical Average Propagation Delay Times:**
  Data Input to Output . . . 15 ns
  Strobe Input to Output . . . 19 ns
  Select Input to Output . . . 22 ns
- **Fully Compatible with most TTL Circuits**
- **Low Power Dissipation . . . 31 mW Typical (Enabled)**

SN54LS352 . . . J OR W PACKAGE
SN74LS352 . . . D OR N PACKAGE
(TOP VIEW)

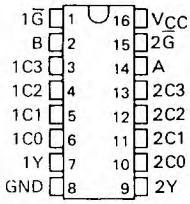

SN54LS352 . . . FK PACKAGE
(TOP VIEW)

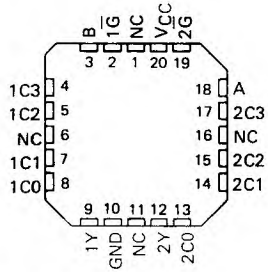

NC – No internal connection

description

Each of these Schottky-clamped data selectors/multiplexers contains inverters and drivers to supply fully complementary, on-chip, binary decoding data selection to the AND-OR-invert gates. Separate strobe inputs are provided for each of the two four-line sections.

FUNCTION TABLE

SELECT INPUTS		DATA INPUTS				STROBE	OUTPUT
B	A	C0	C1	C2	C3	$\overline{G}$	Y
X	X	X	X	X	X	H	H
L	L	L	X	X	X	L	H
L	L	H	X	X	X	L	L
L	H	X	L	X	X	L	H
L	H	X	H	X	X	L	L
H	L	X	X	L	X	L	H
H	L	X	X	H	X	L	L
H	H	X	X	X	L	L	H
H	H	X	X	X	H	L	L

Select inputs A and B are common to both sections.
H = high level, L = low level, X = irrelevant

logic symbol†

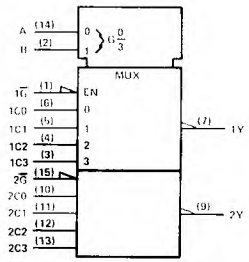

†This symbol is in accordance with ANSI/IEEE Std. 91-1984 and IEC Publication 617-12.
Pin numbers shown are for D, J, N, and W packages.

absolute maximum ratings over operating free-air temperature range (unless otherwise noted)

Supply voltage, V_{CC} (see Note 1) . . . . . 7 V
Input voltage . . . . . 7 V
Operating free-air temperature range: SN54LS352 . . . . . −55°C to 125°C
SN74LS352 . . . . . 0°C to 70°C
Storage temperature range . . . . . −65°C to 150°C

NOTE 1 Voltage values are with respect to network ground terminal.

PRODUCTION DATA documents contain information current as of publication date. Products conform to specifications per the terms of Texas Instruments standard warranty. Production processing does not necessarily include testing of all parameters.

logic diagram (positive logic)

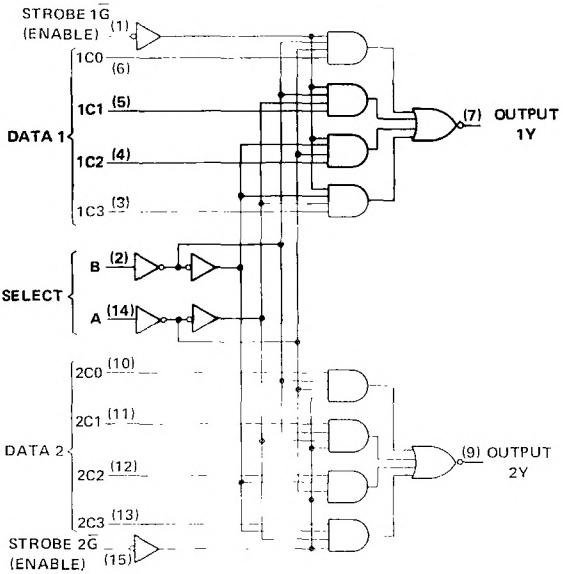

Pin numbers shown are for D, J, N, and W packages.

schematics of inputs and outputs

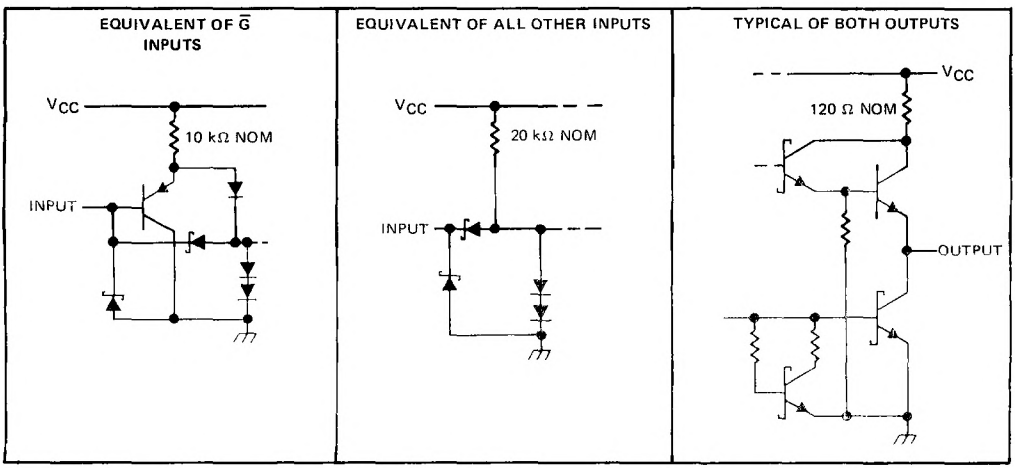

TEXAS INSTRUMENTS
POST OFFICE BOX 655012 • DALLAS, TEXAS 75265

recommended operating conditions

		SN54LS352			SN74LS352			UNIT
		MIN	NOM	MAX	MIN	NOM	MAX	
V_{CC}	Supply voltage	4.5	5	5.5	4.75	5	5.25	V
V_{IH}	High-level input voltage	2			2			V
V_{IL}	Low-level input voltage			0.7			0.8	V
I_{OH}	High-level output current			−0.4			−0.4	mA
I_{OL}	Low-level output current			4			8	mA
T_A	Operating free-air temperature	−55		125	0		70	°C

electrical characteristics over recommended operating free-air temperature range (unless otherwise noted)

PARAMETER		TEST CONDITIONS†		SN54LS352			SN74LS352			UNIT
				MIN	TYP‡	MAX	MIN	TYP‡	MAX	
V_{IK}		V_{CC} = MIN, I_I = −18 mA				−1.5			−1.5	V
V_{OH}		V_{CC} = MIN, V_{IH} = 2 V, V_{IL} = MAX, I_{OH} = −0.4 mA		2.5	3.4		2.7	3.4		V
V_{OL}		V_{CC} = MIN, V_{IH} = 2 V, V_{IL} = MAX	I_{OL} = 4 mA		0.25	0.4		0.25	0.4	V
			I_{OL} = 8 mA					0.35	0.5	
I_I		V_{CC} = MAX, V_I = 7 V				0.1			0.1	mA
I_{IH}		V_{CC} = MAX, V_I = 2.7 V				20			20	μA
I_{IL}	$\overline{G}$	V_{CC} = MAX, V_I = 0.4 V				−0.2			−0.2	mA
	All other					−0.4			−0.4	
I_{OS}§		V_{CC} = MAX		−20		−100	−20		−100	mA
I_{CCL}		V_{CC} = MAX, See Note 2			6.2	10		6.2	10	mA

† For conditions shown as MIN or MAX, use the appropriate value specified under recommended operating conditions.
‡ All typical values are at V_{CC} = 5 V, T_A = 25°C.
§ Not more than one output should be shorted at a time, and duration of the short-circuit should not exceed one second.
NOTE 2: I_{CCL} is measured with the outputs open and all inputs grounded.

switching characteristics, V_{CC} = 5 V, T_A = 25°C

PARAMETER¶	FROM (INPUT)	TO (OUTPUT)	TEST CONDITIONS	MIN	TYP	MAX	UNIT
t_{PLH}	Data	Y	R_L = 2 kΩ, C_L = 15 pF, See Note 3		13	20	ns
t_{PHL}	Data	Y			17	26	ns
t_{PLH}	A or B	Y			19	29	ns
t_{PHL}	A or B	Y			25	38	ns
t_{PLH}	$\overline{G}$	Y			16	24	ns
t_{PHL}	$\overline{G}$	Y			21	32	ns

¶ t_{PLH} = propagation delay time, low-to-high-level output
t_{PHL} = propagation delay time, high-to-low-level output
NOTE 3: Load circuits and voltage waveforms are shown in Section 1.

BULLETIN NO. DL-S 12464, OCTOBER 1976 – REVISED MARCH 1988

- **Inverting Versions of SN54LS253, SN74LS253**
- **Schottky-Diode-Clamped Transistors**
- **Permits Multiplexing from N lines to 1 line**
- **Performs Parallel-to-Serial Conversion**
- **Typical Average Propagation Delay Times:**
  Data Input to Output . . . 12 ns
  Control Input to Output . . . 16 ns
  Select Input to Output . . . 21 ns
- **Fully Compatible with most TTL Circuits**
- **Low Power Dissipation . . . 35 mW Typical (Enabled)**
- **Inverted Data**

SN54LS353 . . . J OR W PACKAGE
SN74LS353 . . . D OR N PACKAGE
(TOP VIEW)

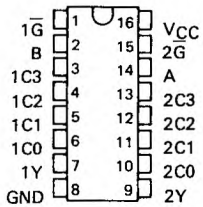

SN54LS353 . . . FK PACKAGE
(TOP VIEW)

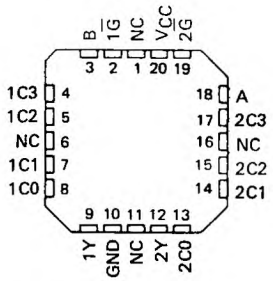

NC – No internal connection

description

Each of these Schottky-clamped data selectors/multiplexers contains inverters and drivers to supply fully complementary, on-chip, binary decoding data selection to the AND-OR-invert gates. Separate output control inputs are provided for each of the two four-line sections.

The three-state outputs can interface with and drive data lines of bus-organized systems. With all but one of the common outputs disabled (at a high-impedance state) the low-impedance of the single enabled output will drive the bus line to a high or low logic level.

FUNCTION TABLE

SELECT INPUTS		DATA INPUTS				OUTPUT CONTROL	OUTPUT
B	A	C0	C1	C2	C3	$\overline{G}$	Y
X	X	X	X	X	X	H	Z
L	L	L	X	X	X	L	H
L	L	H	X	X	X	L	L
L	H	X	L	X	X	L	H
L	H	X	H	X	X	L	L
H	L	X	X	L	X	L	H
H	L	X	X	H	X	L	L
H	H	X	X	X	L	L	H
H	H	X	X	X	H	L	L

Select inputs A and B are common to both sections.

H = high level, L = low level, X = irrelevant, Z = high impedance (off)

absolute maximum ratings over operating free-air temperature range (unless otherwise noted)

Supply voltage, V_{CC} (see Note 1) . . . . . 7 V
Input voltage . . . . . 7 V
Off-state output voltage . . . . . 5.5 V
Operating free-air temperature range: SN54LS353 . . . . . −55°C to 125°C
SN74LS353 . . . . . 0°C to 70°C
Storage temperature range . . . . . −65°C to 150°C

NOTE 1: Voltage values are with respect to network ground terminal

PRODUCTION DATA documents contain information current as of publication date. Products conform to specifications per the terms of Texas Instruments standard warranty. Production processing does not necessarily include testing of all parameters.

logic symbol†

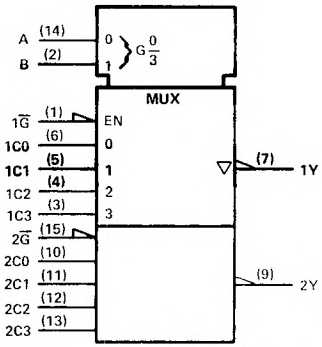

†This symbol is in accordance with ANSI/IEEE Std. 91-1984 and IEC Publication 617-12.
Pin numbers shown are for D, J, N, and W packages.

logic diagram (positive logic)

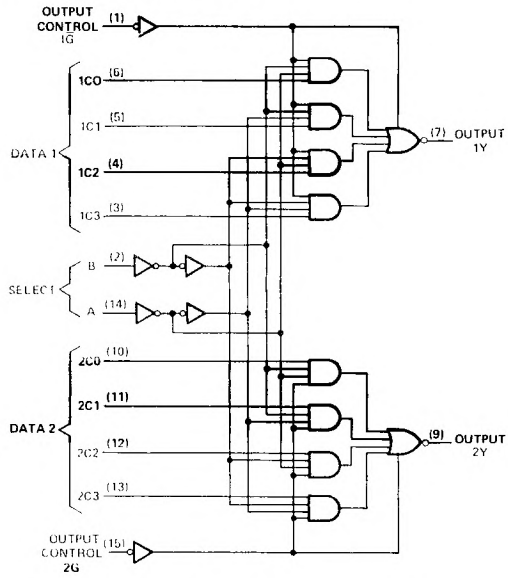

Pin numbers shown are for D, J, N, and W packages.

schematic of inputs and outputs

EQUIVALENT OF G1, G2 INPUTS

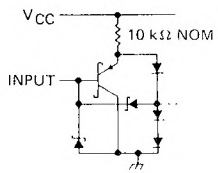

EQUIVALENT OF ALL OTHER INPUTS

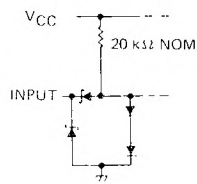

TYPICAL OF BOTH OUTPUTS

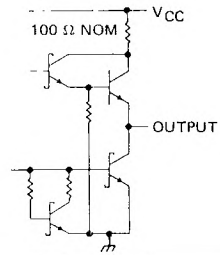

TEXAS INSTRUMENTS
POST OFFICE BOX 655012 • DALLAS, TEXAS 75265

recommended operating conditions

		SN54LS353			SN74LS353			UNIT
		MIN	NOM	MAX	MIN	NOM	MAX	
V_{CC}	Supply voltage	4.5	5	5.5	4.75	5	5.25	V
V_{IH}	High-level input voltage	2			2			V
V_{IL}	Low-level input voltage			0.7			0.8	V
I_{OH}	High-level output current			−1			−2.6	mA
I_{OL}	Low-level output current			4			8	mA
T_A	Operating free-air temperature	−55		125	0		70	°C

electrical characteristics over recommended operating free-air temperature range (unless otherwise noted)

PARAMETER		TEST CONDITIONS†			SN54LS353			SN74LS353			UNIT
					MIN	TYP‡	MAX	MIN	TYP‡	MAX	
V_{IK}		V_{CC} = MIN, I_I = −18 mA					−1.5			−1.5	V
V_{OH}		V_{CC} = MIN, V_{IH} = 2 V, V_{IL} = MAX, I_{OH} = MAX			2.4	3.4		2.4	3.1		V
V_{OL}		V_{CC} = MIN, V_{IH} = 2 V, V_{IL} = MAX	I_{OL} = 4 mA			0.25	0.4		0.25	0.4	V
			I_{OL} = 8 mA						0.35	0.5	
I_{OZ}		V_{CC} = MAX, V_{IH} = 2 V	V_O = 2.7 V				20			20	μA
			V_O = 0.4 V				−20			−20	
I_I		V_{CC} = MAX, V_I = 7 V					0.1			0.1	mA
I_{IH}		V_{CC} = MAX, V_I = 2.7 V					20			20	μA
I_{IL}	G1, G1	V_{CC} = MAX, V_I = 0.4 V					−0.2			−0.2	mA
	All other						−0.4			−0.4	
I_{OS}§		V_{CC} = MAX			−30		−130	−30		−130	mA
I_{CC}		V_{CC} = MAX, See Note 2		Condition A		7	12		7	12	mA
				Condition B		8.5	14		8.5	14	

† For conditions shown as MIN or MAX, use the appropriate value specified under recommended operating conditions.
‡ All typical values are at V_{CC} = 5 V, T_A = 25°C.
§ Not more than one output should be shorted at a time, and duration of the short-circuit should not exceed one second.
NOTE 2: I_{CC} is measured with the outputs open under the following conditions:
A. All inputs grounded.
B. Output control at 4.5 V, all inputs grounded.

switching characteristics, V_{CC} = 5 V, T_A = 25°C

PARAMETER¶	FROM (INPUT)	TO (OUTPUT)	TEST CONDITIONS	MIN	TYP	MAX	UNIT
t_{PLH}	Data	Y	C_L = 15 pF, R_L = 2 kΩ, See Note 3		11	25	ns
t_{PHL}					13	20	
t_{PLH}	Select	Y			20	45	ns
t_{PHL}					21	32	
t_{PZH}	Output Control	Y			11	23	ns
t_{PZL}					15	23	
t_{PHZ}	Output Control	Y	C_L = 5 pF, R_L = 2 kΩ, See Note 3		27	41	ns
t_{PLZ}					12	27	

¶ t_{PLH} = Propagation delay time, low-to-high-level output
t_{PHL} = Propagation delay time, high-to-low-level output
t_{PZH} = Output enable time to high level
t_{PZL} = Output enable time to low level
t_{PHZ} = Output disable time from high level
t_{PLZ} = Output disable time from low level
NOTE 3: Load circuits and voltage waveforms are shown in Section 1.

8-LINE TO 1-LINE DATA SELECTORS/MULTIPLEXERS/REGISTERS

D2544, JULY 1979—REVISED MARCH 1988

- **Transparent Latches on Data Select Inputs**
- **Complementary Outputs**
- Easily Expandable
- **High-Density 20-Pin Package**

	DATA REGISTERS	OUTPUTS
'LS354	Transparent	3 State
'LS355	Transparent	Open Collector
'LS356	Edge-Triggered	3 State

description

These monolithic data selectors/multiplexers contain full on-chip binary decoding to select one of eight data sources. The data-select address is stored in transparent latches that are enabled by a low level on pin 11, $\overline{SC}$. On the 'LS354 and 'LS355 a similar er[illegible] for data is obtained by a low level on pin 9, '[illegible] The edge-triggered data registers of the 'LS356 is clocked by a low-to-high transition on pin 9, CLK. Complementary outputs are available in either three-state versions ('LS354 and 'LS356) or open-collector version ('LS355).

The SN54LS354 through SN54LS356 are characterized for operation over the full military temperature range of −55°C to 125°C. The SN74LS354 through SN74LS356 are characterized for operation from 0°C to 70°C.

SN54LS354, SN54LS355 . . . J PACKAGE
SN74LS354, SN74LS355 . . . DW OR N PACKAGE
(TOP VIEW)

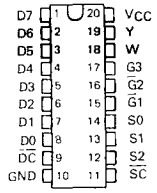

SN54LS354, SN54LS355 . . . FK PACKAGE
(TOP VIEW)

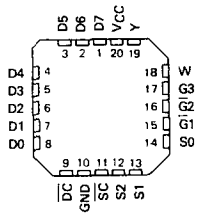

SN54LS356 . . . J OR W PACKAGE
SN74LS356 . . . DW OR N PACKAGE
(TOP VIEW)

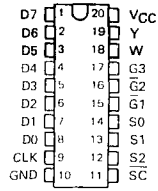

SN54LS356 . . . FK PACKAGE
(TOP VIEW)

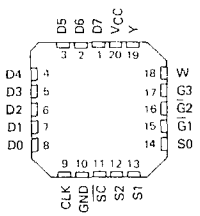

PRODUCTION DATA documents contain information current as of publication date. Products conform to specifications per the terms of Texas Instruments standard warranty. Production processing does not necessarily include testing of all parameters.

FUNCTION TABLE

INPUTS								OUTPUTS	
SELECT			DATA CONTROL ('LS354, 'LS355)	CLOCK ('LS356)	OUTPUT ENABLES				
S2	S1	S0			$\overline{G1}$	$\overline{G2}$	G3	W	Y
X	X	X	X	X	H	X	X	Z	Z
X	X	X	X	X	X	H	X	Z	Z
X	X	X	X	X	X	X	L	Z	Z
L	L	L	L	↑	L	L	H	$\overline{D0}$	D0
L	L	L	H	H or L	L	L	H	$\overline{D0}_n$	$D0_n$
L	L	H	L	↑	L	L	H	$\overline{D1}$	D1
L	L	H	H	H or L	L	L	H	$\overline{D1}_n$	$D1_n$
L	H	L	L	↑	L	L	H	$\overline{D2}$	D2
L	H	L	H	H or L	L	L	H	$\overline{D2}_n$	$D2_n$
L	H	H	L	↑	L	L	H	$\overline{D3}$	D3
L	H	H	H	H or L	L	L	H	$\overline{D3}_n$	$D3_n$
H	L	L	L	↑	L	L	H	D4	D4
H	L	L	H	H or L	L	L	H	$\overline{D4}_n$	$D4_n$
H	L	H	L	↑	L	L	H	$\overline{D5}$	D5
H	L	H	H	H or L	L	L	H	$\overline{D5}_n$	$D5_n$
H	H	L	L	↑	L	L	H	$\overline{D6}$	D6
H	H	L	H	H or L	L	L	H	$\overline{D6}_n$	$D6_n$
H	H	H	L	↑	L	L	H	$\overline{D7}$	D7
H	H	H	H	H or L	L	L	H	$\overline{D7}_n$	$D7_n$

H = high level (steady state)
L = low level (steady state)
X = irrelevant (any input, including transitions)
Z = high-impedance state (off state)
↑ = transition from low to high level
D0 . . . D7 = the level of steady-state inputs at inputs D0 through D7, respectively, at the time of the low-to-high clock transition in the cae of 'LS356.
$D0_n$ . . . $D7_n$ = the level of steady state inputs at inputs D0 through D7, respectively, before the most recent low-to-high transition of data control or clock
This column shows the input address setup with $\overline{SC}$ low.

TYPICAL OF BOTH OUTPUTS ON 'LS355

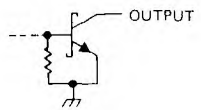

schematics of inputs and outputs

EQUIVALENT OF EACH DATA OR SELECT INPUT

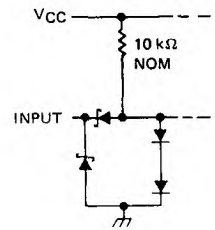

EQUIVALENT OF ALL OTHER INPUTS

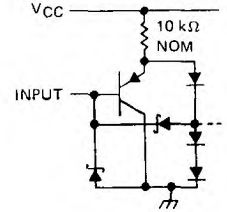

TYPICAL OF BOTH OUTPUTS ON 'LS354 AND 'LS356

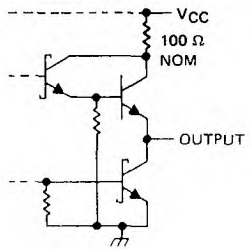

absolute maximum ratings over operating free-air temperature range (unless otherwise noted)

Supply voltage (see Note 1) . . . . . 7 V
Input voltage . . . . . 7 V
Operating free-air temperature range: SN54LS' . . . . . − 55° C to 125° C
SN74LS' . . . . . 0° C to 70° C
Storage temperature range . . . . . − 65° C to 150° C

NOTE 1: Voltage values are with respect to network ground terminal.

TEXAS INSTRUMENTS
POST OFFICE BOX 655012 • DALLAS, TEXAS 75265

logic symbols†

'LS354

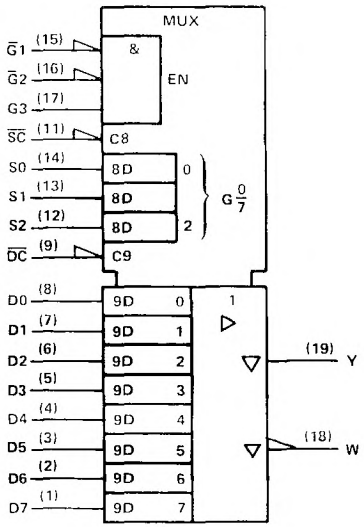

'LS355

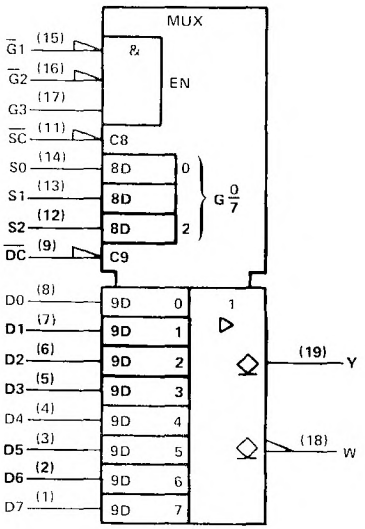

'LS356

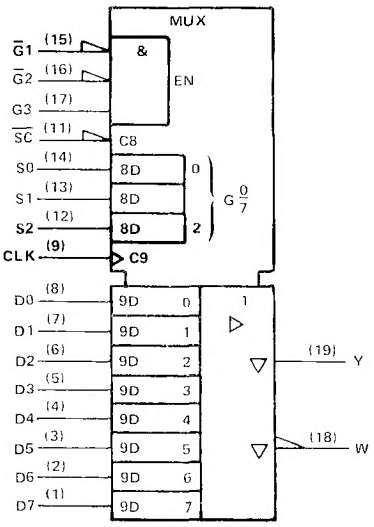

†This symbol is in accordance with ANSI/IEEE Std. 91-1984 and IEC Publication 617-12.
Pin numbers shown are for DW, J, N, and W packages.

logic diagram (positive logic)

'LS354, 'LS355

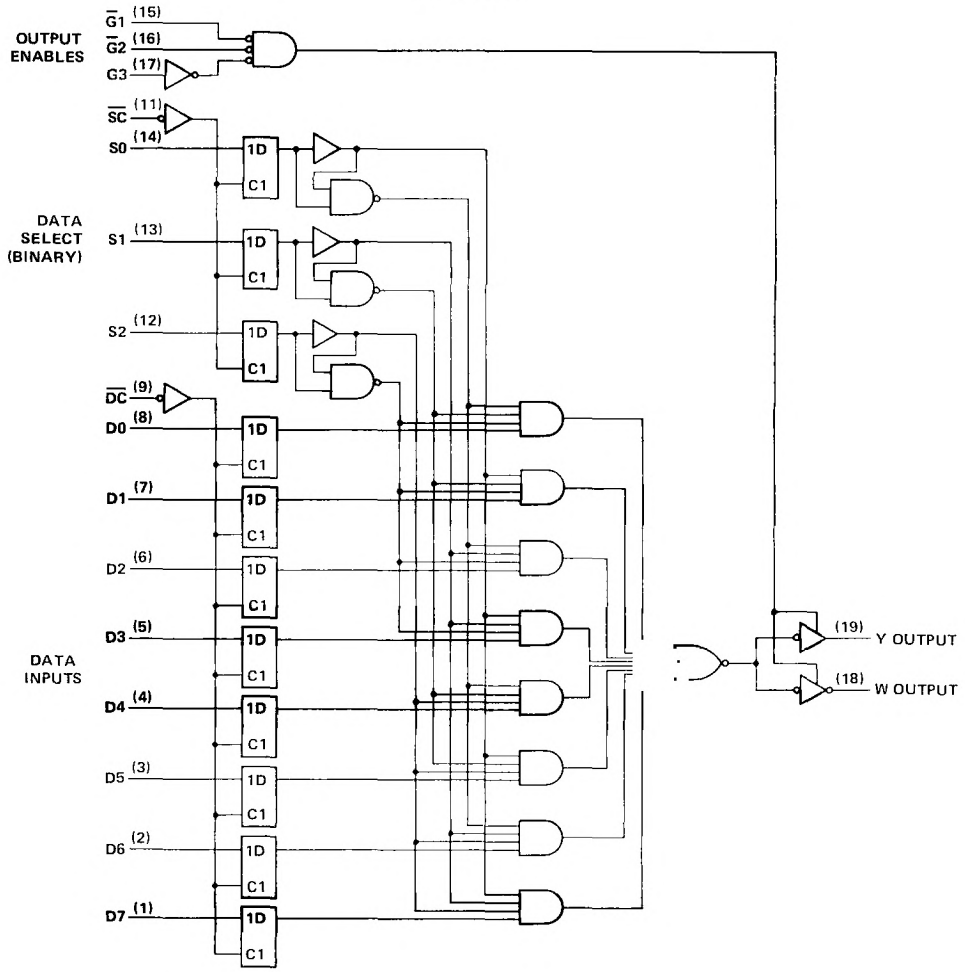

Pin numbers shown are for DW, J and N packages

TEXAS INSTRUMENTS
POST OFFICE BOX 655012 • DALLAS, TEXAS 75265

logic diagram (positive logic)

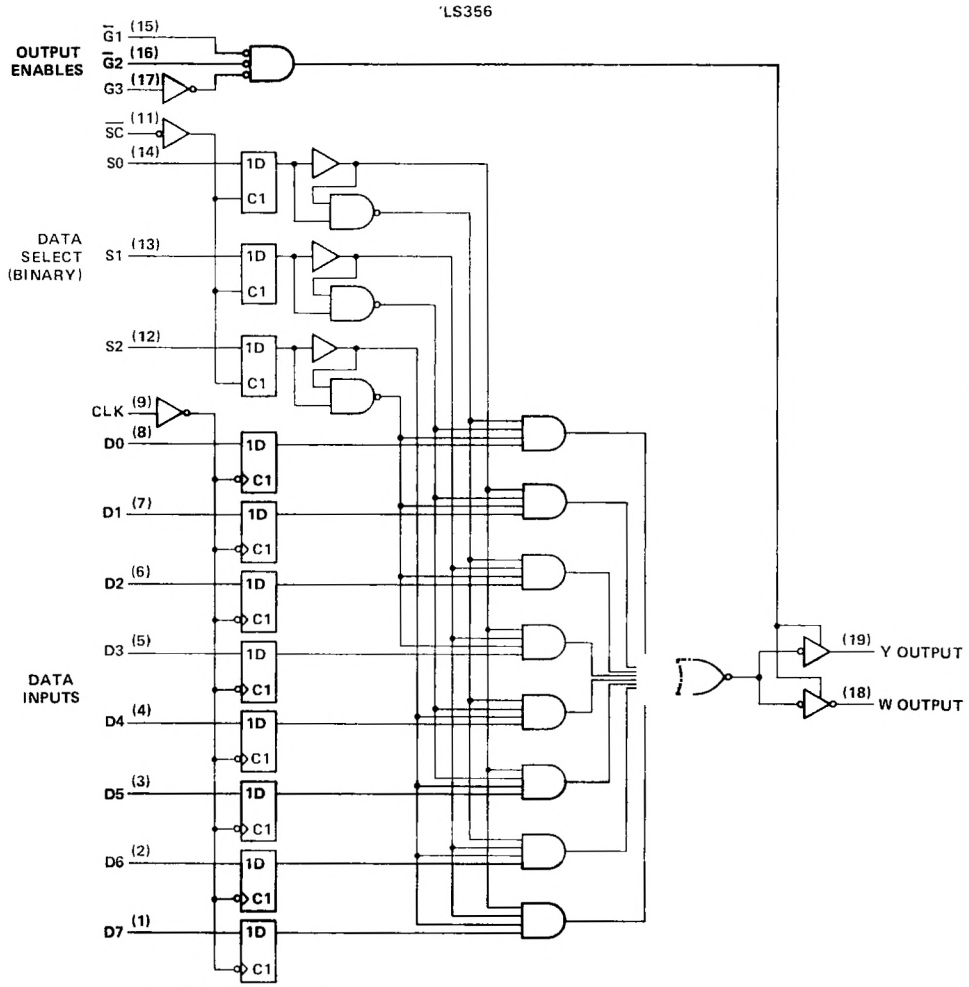

Pin numbers shown are for DW, J, N, and W packages.

recommended operating conditions

			SN54LS354 SN54LS356			SN74LS354 SN74LS356			UNIT
			MIN	NOM	MAX	MIN	NOM	MAX	
V_{CC}	Supply voltage		4.5	5	5.5	4.75	5	5.25	V
V_{IH}	High-level input voltage		2			2			V
V_{IL}	Low-level input voltage				0.7			0.8	V
I_{OH}	High-level output current				−1			−2.6	mA
I_{OL}	Low-level output current				12			24	mA
t_{su}	Setup times, high-or-low-level data (with respect to ↑ at pin 9)	'LS354	15			15			ns
		'LS356	15			15			
t_h	Hold times, high-or-low-level data (with respect to ↑ at pin 9)	'LS354	15			15			ns
		'LS356	0			0			
T_A	Operating free-air temperature		−55		125	0		70	°C

electrical characteristics over recommended operating free-air temperature range (unless otherwise noted)

PARAMETER		TEST CONDITIONS†		SN54LS354 SN54LS356			SN74LS354 SN74LS356			UNIT
				MIN	TYP‡	MAX	MIN	TYP‡	MAX	
V_{IK}		V_{CC} = MIN, I_I = −18 mA				−1.5			−1.5	V
V_{OH}		V_{CC} = MIN, V_{IH} = 2 V, V_{IL} = MAX, I_{OH} = MAX		2.4			2.4			V
V_{OL}		V_{CC} = MIN, V_{IH} = 2 V, V_{IL} = MAX	I_{OL} = 12 mA		0.25	0.4		0.25	0.4	V
			I_{OL} = 24 mA					0.35	0.5	
I_{OZ}		V_{CC} = MAX	V_O = 2.7 V			20			20	μA
			V_O = 0.4 V			−20			−20	
I_I		V_{CC} = MAX, V_I = 7 V				0.1			0.1	mA
I_{IH}		V_{CC} = MAX, V_I = 2.7 V				20			20	μA
I_{IL}	$\overline{DC}$ or CLK, $\overline{G1}$, $\overline{G2}$, G3	V_{CC} = MAX, V_I = 0.4 V				−0.2			−0.2	mA
	All others					−0.4			−0.4	
I_{OS}§		V_{CC} = MAX		−30		−130	−30		−130	mA
I_{CC}		V_{CC} = MAX, See Note 2			29	46		29	46	mA

† For conditions shown as MIN or MAX, use the appropriate values specified under recommended operating conditions.
‡ All typical values are at V_{CC} = 5 V, T_A = 25°C.
§ Not more than one output should be shorted at a time, and duration of the short-circuit should not exceed one second.
NOTE 2: I_{CC} is measured with the inputs grounded and the outputs open.

TEXAS INSTRUMENTS
POST OFFICE BOX 655012 • DALLAS, TEXAS 75265

switching characteristics, V_{CC} = 5 V, T_A = 25°C, R_L = 667 Ω

PARAMETER	FROM (INPUT)	TO (OUTPUT)	TEST CONDITIONS	'LS354			[illegible]			UNIT
				MIN	TYP	MAX	MIN	TYP	MAX	
t_{PLH}	D0-D7	Y	C_L = 45 pF, See Note 3		24	36				ns
t_{PHL}					23	35				
t_{PLH}		W			18	27				ns
t_{PHL}					29	44				
t_{PLH}	$\overline{DC}$ or CLK	Y			28	42		18	27	ns
t_{PHL}					26	39		33	50	
t_{PLH}		W			22	33		24	36	ns
t_{PHL}					33	50		18	27	
t_{PLH}	S0, S1 S2	Y			29	44		30	45	ns
t_{PHL}					24	45		28	48	
t_{PLH}		W			28	42		36	54	ns
t_{PHL}					34	51		30	45	
t_{PLH}	$\overline{SC}$	Y			34	51		36	54	ns
t_{PHL}					31	47		40	60	
t_{PLH}		W			27	41		32	48	ns
t_{PHL}					40	60		36	54	
t_{PZH}	$\overline{G1}$, $\overline{G2}$	Y			14	27		14	25	ns
t_{PZL}					18	27		17	25	
t_{PHZ}			C_L = 5 pF, See Note 3		15	25		16	24	ns
t_{PLZ}					15	25		16	24	
t_{PZH}		W	C_L = 45 pF, See Note 3		12	24		14	23	ns
t_{PZL}					16	24		16	23	
t_{PHZ}			C_L = 5 pF, See Note 3		15	25		16	23	ns
t_{PLZ}					15	25		16	23	
t_{PZH}	G3	Y	C_L = 45 pF, See Note 3		15	29		15	27	ns
t_{PZL}					19	29		18	27	
t_{PHZ}			C_L = 5 pF, See Note 3		15	25		16	25	ns
t_{PLZ}					15	25		16	25	
t_{PZH}		W	C_L = 45 pF, See Note 3		13	25		14	25	ns
t_{PZL}					17	25		16	25	
t_{PHZ}			C_L = 5 pF, See Note 3		15	25		16	25	ns
t_{PLZ}					15	25		16	25	

NOTE 3: Load circuits and voltage waveforms are shown in Section 1.

recommended operating conditions

		SN54LS355			SN74LS355			UNIT
		MIN	NOM	MAX	MIN	NOM	MAX	
V_{CC}	Supply voltage	4.5	5	5.5	4.75	5	5.25	V
V_{IH}	High-level input voltage	2			2			V
V_{IL}	Low-level input voltage			0.7			0.8	V
V_{OH}	High-level output voltage			5.5			5.5	V
I_{OL}	Low-level output current			12			24	mA
t_{su}	Setup times, high-or-low-level data, (with respect to ↑ at pin 9)	15			15			ns
t_h	Hold times, high-or low-level data (with respect to ↑ at pin 9)	15			15			ns
T_A	Operating free-air temperature	−55		125	0		70	°C

electrical characteristics over recommended operating free-air temperature range (unless otherwise noted)

PARAMETER		TEST CONDITIONS†		SN54LS355			SN74LS355			UNIT
				MIN	TYP‡	MAX	MIN	TYP‡	MAX	
V_{IK}		V_{CC} = MIN, I_I = −18 mA				−1.5			−1.5	V
I_{OH}		V_{CC} = MIN, V_{IH} = 2 V, V_{IL} = MAX, V_{OH} = 5.5 V				0.1			0.1	mA
V_{OL}		V_{CC} = MIN, V_{IH} = 2 V, V_{IL} = MAX	I_{OL} = 12 mA		0.25	0.4		0.25	0.4	V
			I_{OL} = 24 mA					0.35	0.5	
I_I		V_{CC} = MAX, V_I = 7 V				0.1			0.1	mA
I_{IH}		V_{CC} = MAX, V_I = 2.7 V				20			20	μA
I_{IL}	$\overline{DC}$ or CLK, $\overline{G1}$, $\overline{G2}$, G3	V_{CC} = MAX, V_I = 0.4 V				−0.2			−0.2	mA
	All others					−0.4			−0.4	
I_{CC}		V_{CC} = MAX, See Note 2			29	46		29	46	mA

† For conditions shown as MIN or MAX, use the appropriate value specified under recommended operating conditions for the applicable type.
‡ All typical values are at V_{CC} = 5 V, T_A = 25°C.
NOTE 2: I_{CC} is measured with the inputs grounded and the outputs open.

TEXAS INSTRUMENTS
POST OFFICE BOX 655012 • DALLAS, TEXAS 75265

switching characteristics, V_{CC} = 5 V, T_A = 25°C, R_L = 667 Ω

PARAMETER	FROM (INPUT)	TO (OUTPUT)	TEST CONDITIONS	'LS355 MIN.	'LS355 TYP	'LS355 MAX	UNIT
t_{PLH}	D0-D7	Y	C_L = 45 pF, See Note 3		34	41	ns
t_{PHL}					26	39	
t_{PLH}		W			30	45	ns
t_{PHL}					33	50	
t_{PLH}	$\overline{DC}$ or CLK	Y			38	57	ns
t_{PHL}					31	47	
t_{PLH}		W			33	50	ns
t_{PHL}					39	59	
t_{PLH}	S0, S1, S2	Y			39	59	ns
t_{PHL}					36	49	
t_{PLH}		W			32	48	ns
t_{PHL}					39	58	
t_{PLH}	$\overline{SC}$	Y			45	68	ns
t_{PHL}					42	63	
t_{PLH}		W			44	66	ns
t_{PHL}					45	68	
t_{PHL}	$\overline{G}1$, $\overline{G}2$	Y			21	32	ns
t_{PHL}					22	33	
t_{PLH}		W			18	27	ns
t_{PHL}					19	29	
t_{PLH}	G3	Y			24	36	ns
t_{PHL}					25	40	
t_{PLH}		W			19	31	ns
t_{PHL}					19	29	

NOTE 3: Load circuits and voltage waveforms are shown in Section 1.

HEX BUS DRIVERS WITH 3-STATE OUTPUTS

DECEMBER 1983—REVISED MARCH 1988

- **3-State Outputs Drive Bus Lines or Buffer Memory Address Registers**
- **Choice of True or Inverting Outputs**
- **Package Options Include Plastic "Small Outline" Packages, Ceramic Chip Carriers and Flat Packages, and Plastic and Ceramic DIPs**
- **Dependable Texas Instruments Quality and Reliability**

'365A, '367A, 'LS365A, 'LS367A True Outputs '366A, '368A, 'LS366A, 'LS368A Inverting Outputs

description

These Hex buffers and line drivers are designed specifically to improve both the performance and density of three-state memory address drivers, clock drivers, and bus oriented receivers and transmitters. The designer has choice of selected combinations of inverting and noninverting outputs, symmetrical $\overline{G}$ (active-low control) inputs.

These devices feature high fan-out, improved fan-in, and can be used to drive terminated lines down to 133 ohms.

The SN54365A thru SN54368A and SN54LS365A thru SN54LS368A are characterized for operation over the full military temperature range of −55°C to 125°C. The SN74365A thru SN74368A and SN74LS365A thru SN74LS368A are characterized for operation from 0°C to 70°C.

SN54365A, 366A, SN54LS365A, 366A . . . J PACKAGE
SN74365A, 366A . . . N PACKAGE
SN74LS365A, SN74LS366A . . . D OR N PACKAGE
(TOP VIEW)

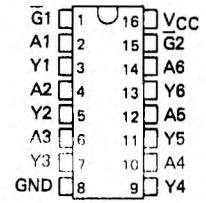

SN54LS365A, SN54LS368A . . . FK PACKAGE
(TOP VIEW)

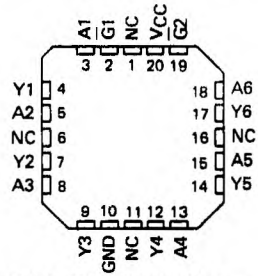

SN54367A, 368A, SN54LS367A, 368A . . . J PACKAGE
SN74367A, 368A . . . N PACKAGE
SN74LS367A, SN74LS368A . . . D OR N PACKAGE
(TOP VIEW)

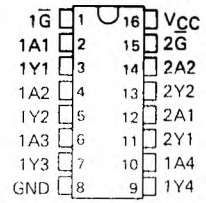

SN54LS367A, SN54LS368A . . . FK PACKAGE
(TOP VIEW)

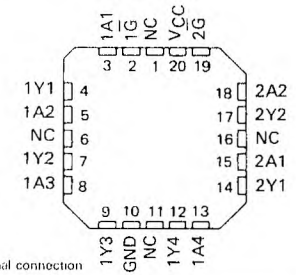

NC No internal connection

PRODUCTION DATA documents contain information current as of publication date. Products conform to specifications per the terms of Texas Instruments standard warranty. Production processing does not necessarily include testing of all parameters.

schematics of inputs and outputs

'365A thru '368A

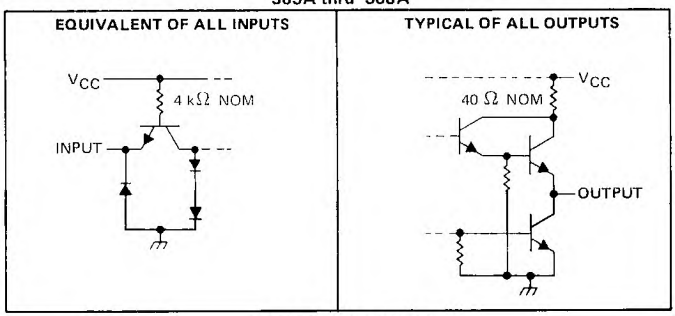

'LS365A thru 'LS368A

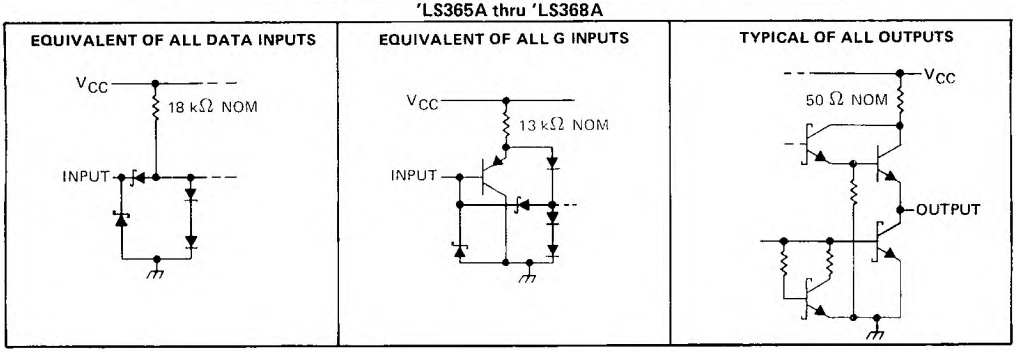

logic diagrams (positive logic)

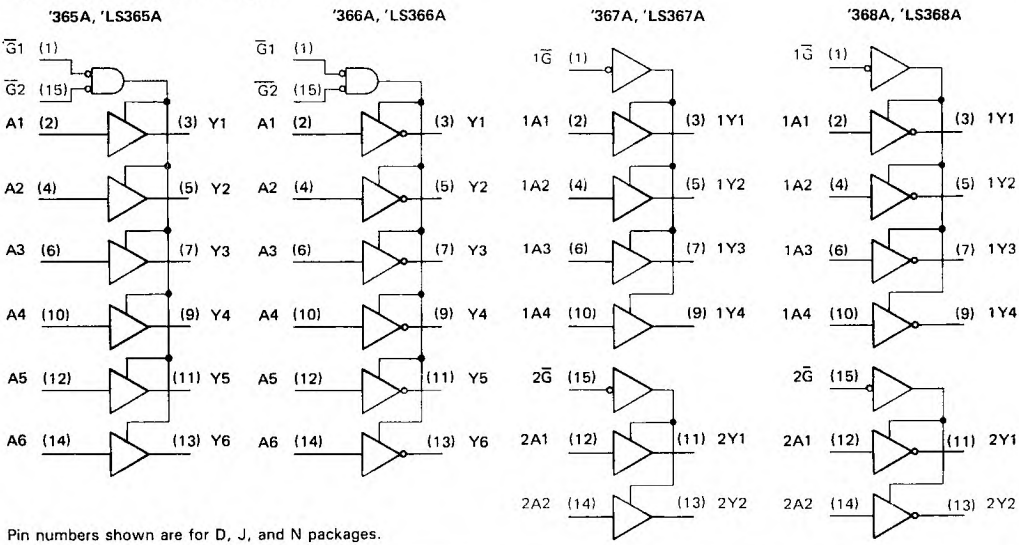

Pin numbers shown are for D, J, and N packages.

TEXAS INSTRUMENTS
POST OFFICE BOX 655012 • DALLAS, TEXAS 75265

logic symbols†

'365A

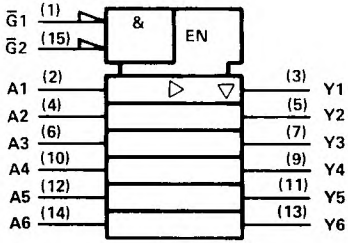

'366A

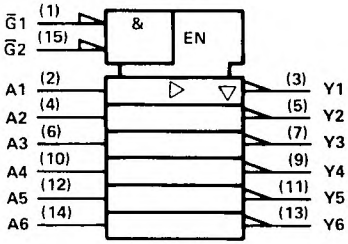

'367A

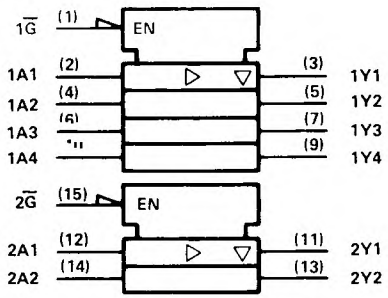

'368A

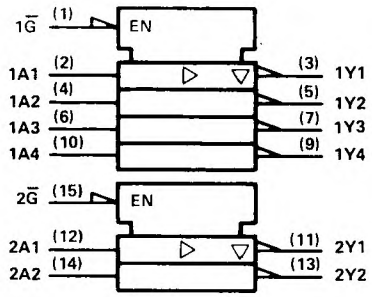

†These symbols are in accordance with ANSI/IEEE Std 91-1984 and IEC Publication 617-12.
Pin numbers shown are for D, J, and N packages.

absolute maximum ratings over operating free-air temperature range (unless otherwise noted)

Supply voltage, V_{CC} (see Note 1) . . . . . 7 V
Input voltage: '365A, '366A, '367A, '368A . . . . . 5.5 V
'LS365A, 'LS366A, 'LS367A, 'LS368A . . . . . 7 V
Voltage applied to a disabled 3-state output . . . . . 5.5 V
Operating free-air temperature: SN54' . . . . . −55°C to 125°C
SN74' . . . . . 0°C to 70°C
Storage temperature range . . . . . −65°C to 150°C

NOTE 1: Voltage values are with respect to network ground terminal.

recommended operating conditions

		SN54365A SN54367A			SN74365A SN74367A			UNIT
		MIN	NOM	MAX	MIN	NOM	MAX	
V_{CC}	Supply voltage	4.5	5	5.5	4.75	5	5.25	V
V_{IH}	High-level input voltage	2			2			V
V_{IL}	Low-level input voltage			0.8			0.8	V
I_{OH}	High-level output current			−2			−5.2	mA
I_{OL}	Low-level output current			32			32	mA
T_A	Operating free-air temperature	−55		125	0		70	°C

electrical characteristics over recommended operating free-air temperature range (unless otherwise noted)

PARAMETER		TEST CONDITIONS†			SN54365A SN54367A			SN74365A SN74367A			UNIT
					MIN	TYP‡	MAX	MIN	TYP‡	MAX	
V_{IK}		V_{CC} = MIN,	I_I = −12 mA				−1.5			−1.5	V
V_{OH}		V_{CC} = MIN, I_{OH} = MAX	V_{IH} = 2 V,	V_{IL} = 0.8 V,	2.4	3.3		2.4	3.1		V
V_{OL}		V_{CC} = MIN, I_{OL} = 32 mA	V_{IH} = 2 V,	V_{IL} = 0.8 V,			0.4			0.4	V
I_{OZ}		V_{CC} = MAX, V_O = 2.4 V	V_{IH} = 2 V,	V_{IL} = 0.8 V,			40			40	μA
		V_{CC} = MAX, V_O = 0.4 V	V_{IH} = 2 V	V_{IL} = 0.8 V,			40			−40	
I_I		V_{CC} = MAX,	V_I = 5.5 V				1			1	mA
I_{IH}		V_{CC} = MAX,	V_I = 2.4 V				40			40	μA
I_{IL}	A Inputs	V_{CC} = MAX,	V_I = 0.5 V,	Either $\overline{G}$ input at 2 V			−40			−40	μA
		V_{CC} = MAX,	V_I = 0.4 V,	Both $\overline{G}$ inputs at 0.4 V			−1.6			−1.6	mA
	$\overline{G}$ Inputs	V_{CC} = MAX,	V_I = 0.4 V				−1.6			1.6	
I_{OS}§		V_{CC} = MAX			−40		−130	−40		−130	mA
I_{CC}		V_{CC} = MAX,	Data inputs = 0 V,	Output controls = 4.5 V		65	85		65	85	mA

† For conditions shown as MIN or MAX, use the appropriate value specified under recommended operating conditions.
‡ All typical values are at V_{CC} = 5 V, T_A = 25°C.
§ Not more than one output should be shorted at a time.

switching characteristics, V_{CC} = 5 V, T_A = 25°C (see note 2)

PARAMETER	FROM (INPUT)	TO (OUTPUT)	TEST CONDITIONS		MIN	TYP	MAX	UNIT
t_{PLH}	Any	Y	R_L = 400 Ω,	C_L = 50 pF			16	ns
t_{PHL}							22	ns
t_{PZH}							35	ns
t_{PZL}							37	ns
t_{PHZ}			R_L = 400 Ω,	C_L = 5 pF			11	ns
t_{PLZ}							27	ns

NOTE 2: Load circuits and voltage waveforms are shown in Section 1.

TEXAS INSTRUMENTS
POST OFFICE BOX 655012 • DALLAS, TEXAS 75265

recommended operating conditions

		[illegible]			[illegible]			UNIT
		MIN	NOM	MAX	MIN	NOM	MAX	
V_{CC}	Supply voltage	4.5	5	5.5	4.75	5	5.25	V
V_{IH}	High-level input voltage	2			2			V
V_{IL}	Low-level input voltage			0.8			0.8	V
I_{OH}	High-level output current			−2			−5.2	mA
I_{OL}	Low-level output current			32			32	mA
T_A	Operating free-air temperature	−55		125	0		70	°C

electrical characteristics over recommended operating free-air temperature range (unless otherwise noted)

PARAMETER		TEST CONDITIONS†			SN[illegible]			SN[illegible]			UNIT
					MIN	TYP‡	MAX	MIN	TYP‡	MAX	
V_{IK}		V_{CC} = MIN, I_I = −12 mA					−1.5			−1.5	V
V_{OH}		V_{CC} = MIN, V_{IH} = 2 V, I_{OH} = MAX		V_{IL} = 0.8 V,	2.4	3.3		2.4	3.1		V
V_{OL}		V_{CC} = MIN, V_{IH} = 2 V, I_{OL} = 32 mA		V_{IL} = 0.8 V,			0.4			0.4	V
I_{OZ}		V_{CC} = MAX, V_{IH} = 2 V, V_O = 2.4 V		V_{IL} = 0.8 V,			40			40	μA
		V_{CC} = MAX, V_{IH} = 2 V, V_O = 0.4 V		V_{IL} = 0.8 V,			−40			−40	
I_I		V_{CC} = MAX, V_I = 5.5 V					1			1	mA
I_{IH}		V_{CC} = MAX, V_I = 2.4 V					40			40	μA
I_{IL}	A Inputs	V_{CC} = MAX, V_I = 0.5 V,		Either $\overline{G}$ input at 2 V			−40			−40	μA
	A Inputs	V_{CC} = MAX, V_I = 0.4 V,		Both $\overline{G}$ inputs at 0.4 V			−1.6			−1.6	mA
	$\overline{G}$ Inputs	V_{CC} = MAX, V_I = 0.4 V					−1.6			−1.6	
I_{OS}§		V_{CC} = MAX			−40		−130	−40		−130	mA
I_{CC}		V_{CC} = MAX,	Data inputs = 0 V,	Output controls = 4.5 V,		59	77		59	77	mA

† For conditions shown as MIN or MAX, use the appropriate value specified under recommended operating conditions.
‡ All typical values are at V_{CC} = 5 V, T_A = 25°C.
§ Not more than one output should be shorted at a time.

switching characteristics, V_{CC} = 5 V, T_A = 25°C (see note 2)

PARAMETER	FROM (INPUT)	TO (OUTPUT)	TEST CONDITIONS		MIN	TYP	MAX	UNIT
t_{PLH}	Any	Y	R_L = 400 Ω,	C_L = 50 pF			17	ns
t_{PHL}							16	ns
t_{PZH}							35	ns
t_{PZL}							37	ns
t_{PHZ}			R_L = 400 Ω,	C_L = 5 pF			11	ns
t_{PLZ}							27	ns

NOTE 2: Load circuits and voltage waveforms are shown in Section 1.

recommended operating conditions

		[illegible]			[illegible]			UNIT
		MIN	NOM	MAX	MIN	NOM	MAX	
V_{CC}	Supply voltage	4.5	5	5.5	4.75	5	5.25	V
V_{IH}	High-level input voltage	2			2			V
V_{IL}	Low-level input voltage			0.7			0.8	V
I_{OH}	High-level output current			−1			−2.6	mA
I_{OL}	Low-level output current			12			24	mA
T_A	Operating free-air temperature	−55		125	0		70	°C

electrical characteristics over recommended operating free-air temperature range (unless otherwise noted)

PARAMETER		TEST CONDITIONS†			SN541[illegible] SN541[illegible]			SN741[illegible] SN741[illegible]			UNIT
					MIN	TYP‡	MAX	MIN	TYP‡	MAX	
V_{IK}		V_{CC} = MIN,	I_I = −18 mA				−1.5			−1.5	V
V_{OH}		V_{CC} = MIN,	V_{IH} = 2 V,	V_{IL} = MAX, I_{OH} = MAX	2.4	3.3		2.4	3.1		V
V_{OL}		V_{CC} = MIN,	V_{IH} = 2 V,	V_{IL} = MAX, I_{OL} = 12 mA		0.25	0.4		0.25	0.4	V
		V_{CC} = MIN,	V_{IH} = 2 V,	V_{IL} = 0.8 V, I_{OL} = 24 mA					0.35	0.5	
I_{OZ}		V_{CC} = MAX,	V_{IH} = 2 V,	V_{IL} = MAX, V_O = 2.4 V			20			20	μA
		V_{CC} = MAX,	V_{IH} = 2 V,	V_{IL} = MAX, V_O = 0.4 V			−20			−20	
I_I		V_{CC} = MAX,	V_I = 7 V				0.1			0.1	mA
I_{IH}		V_{CC} = MAX,	V_I = 2.7 V				20			20	μA
I_{IL}	A Inputs	V_{CC} = MAX,	V_I = 0.5 V,	Either $\overline{G}$ input at 2 V			−20			−20	μA
		V_{CC} = MAX,	V_I = 0.4 V,	Both $\overline{G}$ inputs at 0.4 V			−0.4			−0.4	mA
	$\overline{G}$ Inputs	V_{CC} = MAX,	V_I = 0.4 V				−0.2			−0.2	
I_{OS}§		V_{CC} = MAX			−40		−225	−40		−225	mA
I_{CC}		V_{CC} = MAX,	Data inputs = 0 V,	Output controls = 4.5 V,		14	24		14	24	mA

† For conditions shown as MIN or MAX, use the appropriate value specified under recommended operating conditions.
‡ All typical values are at V_{CC} = 5 V, T_A = 25°C.
§ Not more than one output should be shorted at a time, and the duration of the short circuit should not exceed one second.

TEXAS INSTRUMENTS
POST OFFICE BOX 655012 • DALLAS, TEXAS 75265

switching characteristics, V_{CC} = 5 V, T_A = 25°C (see note 2)

PARAMETER	FROM (INPUT)	TO (OUTPUT)	TEST CONDITIONS	MIN	TYP	MAX	UNIT
t_{PLH}	Any	Y	R_L = 667 Ω, C_L = 45 pF		10	16	ns
t_{PHL}					9	22	ns
t_{PZH}					19	35	ns
t_{PZL}					24	40	ns
t_{PHZ}			R_L = 667 Ω, C_L = 5 pF			30	ns
t_{PLZ}						35	ns

NOTE 2: Load circuits and voltage waveforms are shown in Section 1.

recommended operating conditions

		SN54LS366A SN54LS368A			SN74LS366A SN74LS368A			UNIT
		MIN	NOM	MAX	MIN	NOM	MAX	
V_{CC}	Supply voltage	4.5	5	5.5	4.75	5	5.25	V
V_{IH}	High-level input voltage	2			2			V
V_{IL}	Low-level input voltage			0.7			0.8	V
I_{OH}	High-level output current			−1			−2.6	mA
I_{OL}	Low-level output current			12			24	mA
T_A	Operating free-air temperature	−55		125	0		70	°C

electrical characteristics over recommended operating free-air temperature range (unless otherwise noted)

PARAMETER		TEST CONDITIONS†			SN54LS366A SN54LS368A			SN74LS366A SN74LS368A			UNIT
					MIN	TYP‡	MAX	MIN	TYP‡	MAX	
V_{IK}		V_{CC} = MIN,	I_I = −18 mA				−1.5			−1.5	V
V_{OH}		V_{CC} = MIN, I_{OH} = MAX	V_{IH} = 2 V,	V_{IL} = MAX,	2.4	3.3		2.4	3.1		V
V_{OL}		V_{CC} = MIN, I_{OL} = 12 mA	V_{IH} = 2 V,	V_{IL} = MAX,		0.25	0.4		0.25	0.4	V
		V_{CC} = MIN, I_{OL} = 24 mA	V_{IH} = 2 V,	V_{IL} = 0.8 V,					0.35	0.5	
I_{OZ}		V_{CC} = MAX, V_O = 2.4 V	V_{IH} = 2 V,	V_{IL} = MAX,			20			20	μA
		V_{CC} = MAX, V_O = 0.4 V	V_{IH} = 2 V,	V_{IL} = MAX,			−20			−20	
I_I		V_{CC} = MAX,	V_I = 7 V				0.1			0.1	mA
I_{IH}		V_{CC} = MAX,	V_I = 2.7 V				20			20	μA
I_{IL}	A Inputs	V_{CC} = MAX,	V_I = 0.5 V,	Either $\overline{G}$ input at 2 V			−20			−20	μA
		V_{CC} = MAX,	V_I = 0.4 V,	Both $\overline{G}$ inputs at 0.4 V			−0.4			−0.4	mA
	$\overline{G}$ Inputs	V_{CC} = MAX,	V_I = 0.4 V				−0.2			−0.2	
I_{OS}§		V_{CC} = MAX			−40		−225	−40		−225	mA
I_{CC}		V_{CC} = MAX,	Data inputs = 0 V,	Output controls = 4.5 V,		12	21		12	21	mA

† For conditions shown as MIN or MAX, use the appropriate value specified under recommended operating conditions.
‡ All typical values are at V_{CC} = 5 V, T_A = 25°C.
§ Not more than one output should be shorted at a time, and the duration of the short circuit should not exceed one second.

TEXAS INSTRUMENTS
POST OFFICE BOX 655012 • DALLAS, TEXAS 75265

switching characteristics, V_{CC} = 5 V, T_A = 25°C (see note 2)

PARAMETER	FROM (INPUT)	TO (OUTPUT)	TEST CONDITIONS	MIN	TYP	MAX	UNIT
t_{PLH}	Any	Y	R_L = 667 Ω, C_L = 45 pF		7	15	ns
t_{PHL}					12	18	ns
t_{PZH}					18	35	ns
t_{PZL}					28	45	ns
t_{PHZ}			R_L = 667 Ω, C_L = 5 pF			32	ns
t_{PLZ}						35	ns

NOTE 2: Load circuits and voltage waveforms are shown in Section 1.

- Choice of 8 Latches or 8 D-Type Flip-Flops In a Single Package
- 3-State Bus-Driving Outputs
- Full Parallel-Access for Loading
- Buffered Control Inputs
- Clock/Enable Input Has Hysteresis to Improve Noise Rejection ('S373 and 'S374)
- P-N-P Inputs Reduce D-C Loading on Data Lines ('S373 and 'S374)

'LS373, 'S373
FUNCTION TABLE

OUTPUT ENABLE	ENABLE LATCH	D	OUTPUT
L	H	H	H
L	H	L	L
L	L	X	Q_0
H	X	X	Z

'LS374, 'S374
FUNCTION TABLE

OUTPUT ENABLE	CLOCK	D	OUTPUT
L	↑	H	H
L	↑	L	L
L	L	X	Q_0
H	X	X	Z

SN54LS373, SN54LS374, SN54S373, SN54S374 . . . J OR W PACKAGE
SN74LS373, SN74LS374, SN74S373, SN74S374 . . . DW OR N PACKAGE
(TOP VIEW)

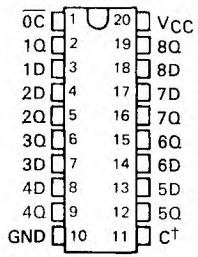

SN54LS373, SN54LS374, SN54S373, SN54S374 . . . FK PACKAGE
(TOP VIEW)

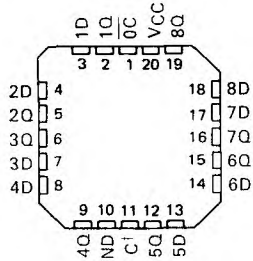

†C for 'LS373 and 'S373; CLK for 'LS374 and 'S374.

description

These 8-bit registers feature three-state outputs designed specifically for driving highly-capacitive or relatively low-impedance loads. The high-impedance third state and increased high-logic-level drive provide these registers with the capability of being connected directly to and driving the bus lines in a bus-organized system without need for interface or pull-up components. They are particularly attractive for implementing buffer registers, I/O ports, bidirectional bus drivers, and working registers.

The eight latches of the 'LS373 and 'S373 are transparent D-type latches meaning that while the enable (C) is high the Q outputs will follow the data (D) inputs. When the enable is taken low the output will be latched at the level of the data that was set up.

PRODUCTION DATA documents contain information current as of publication date. Products conform to specifications per the terms of Texas Instruments standard warranty. Production processing does not necessarily include testing of all parameters.

description (continued)

The eight flip-flops of the 'LS374 and 'S374 are edge-triggered D-type flip-flops. On the positive transition of the clock, the Q outputs will be set to the logic states that were setup at the D inputs.

Schmitt-trigger buffered inputs at the enable/clock lines of the 'S373 and 'S374 devices, simplify system design as ac and dc noise rejection is improved by typically 400 mV due to the input hysteresis. A buffered output control input can be used to place the eight outputs in either a normal logic state (high or low logic levels) or a high-impedance state. In the high-impedance state the outputs neither load nor drive the bus lines significantly.

The output control does not affect the internal operation of the latches or flip-flops. That is, the old data can be retained or new data can be entered even while the outputs are off.

logic diagrams (positive logic)

'LS373, 'S373
TRANSPARENT LATCHES

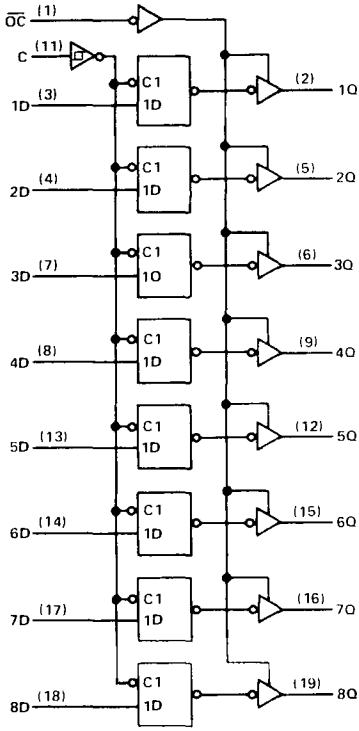

⊓ for 'S373 only

'LS374, 'S374
POSITIVE-EDGE-TRIGGERED FLIP-FLOPS

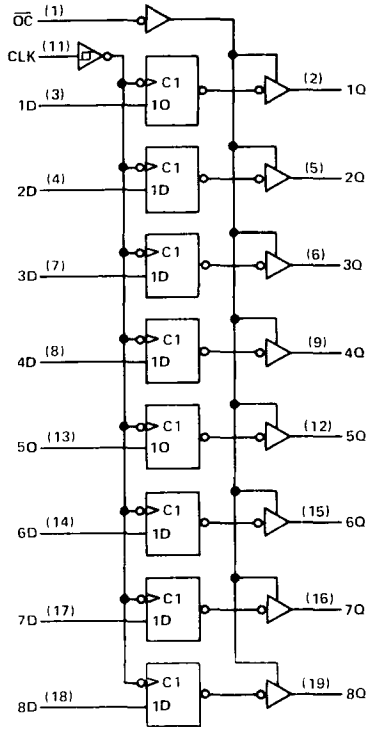

⊓ for 'S374 only

Pin numbers shown are for DW, J, N, and W packages.

schematic of inputs and outputs

'LS373

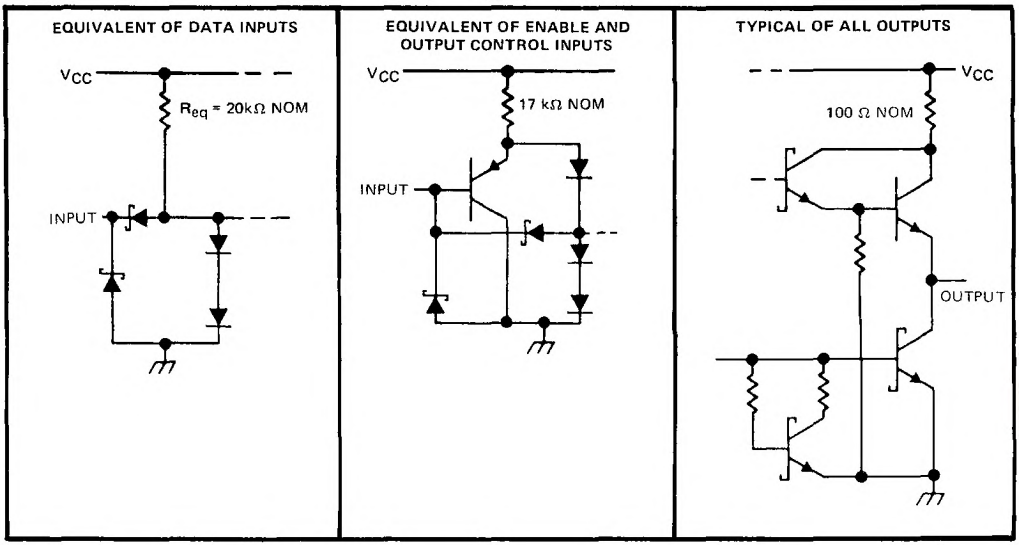

'LS374

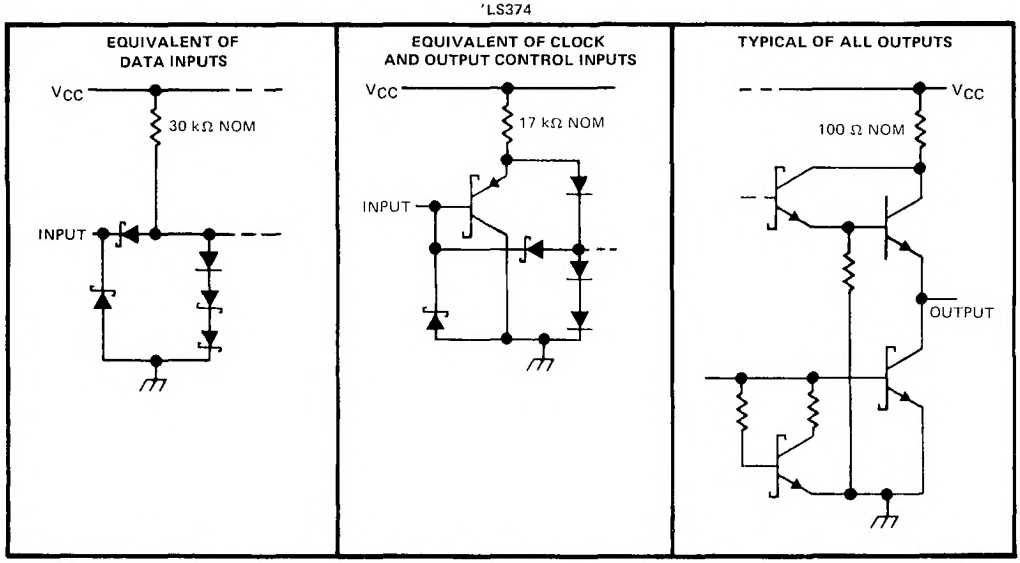

absolute maximum ratings over operating free-air temperature range (unless otherwise noted)

Supply voltage, V_{CC} (see Note 1) . . . . . 7 V
Input voltage . . . . . 7 V
Off-state output voltage . . . . . 5.5 V
Operating free-air temperature range: SN54LS' . . . . . −55°C to 125°C
SN74LS' . . . . . 0°C to 70°C
Storage temperature range . . . . . −65°C to 150°C

NOTE 1: Voltage values are with respect to network ground terminal.

recommended operating conditions

			SN54LS'			SN74LS'			UNIT
			MIN	NOM	MAX	MIN	NOM	MAX	
V_{CC}	Supply voltage		4.5	5	5.5	4.75	5	5.25	V
V_{OH}	High-level output voltage				5.5			5.5	V
I_{OH}	High-level output current				−1			−2.6	mA
I_{OL}	Low-level output current				12			24	mA
t_w	Pulse duration	CLK high	15			15			ns
		CLK low	15			15			
t_{su}	Data setup time	'↓	5↓			5↓			ns
		'LS374	20↑			20↑			
t_h	Data hold time	'LS373	20↓			20↓			ns
		'LS374†	5↑			0↑			
T_A	Operating free-air temperature		−55		125	0		70	°C

†The t_h specification applies only for data frequency below 10 MHz. Designs above 10 MHz should use a minimum of 5 ns. (Commercial only)

electrical characteristics over recommended operating free-air temperature range (unless otherwise noted)

PARAMETER		TEST CONDITIONS†		SN54LS'			SN74LS'			UNIT
				MIN	TYP‡	MAX	MIN	TYP‡	MAX	
V_{IH}	High-level input voltage			2			2			V
V_{IL}	Low-level input voltage					0.7			0.8	V
V_{IK}	Input clamp voltage	V_{CC} = MIN, I_I = −18 mA				−1.5			−1.5	V
V_{OH}	High-level output voltage	V_{CC} = MIN, V_{IH} = 2 V, V_{IL} = V_{IL}max, I_{OH} = MAX		2.4	3.4		2.4	3.1		V
V_{OL}	Low-level output voltage	V_{CC} = MIN, V_{IH} = 2 V, V_{IL} = V_{IL}max	I_{OL} = 12 mA		0.25	0.4		0.25	0.4	V
			I_{OL} = 24 mA					0.35	0.5	
I_{OZH}	Off-state output current, high-level voltage applied	V_{CC} = MAX, V_{IH} = 2 V, V_O = 2.7 V				20			20	μA
I_{OZL}	Off-state output current, low-level voltage applied	V_{CC} = MAX, V_{IH} = 2 V, V_O = 0.4 V				−20			−20	μA
I_I	Input current at maximum input voltage	V_{CC} = MAX, V_I = 7 V				0.1			0.1	mA
I_{IH}	High-level input current	V_{CC} = MAX, V_I = 2.7 V				20			20	μA
I_{IL}	Low-level input current	V_{CC} = MAX, V_I = 0.4 V				−0.4			−0.4	mA
I_{OS}	Short-circuit output current§	V_{CC} = MAX		−30		−130	−30		−130	mA
I_{CC}	Supply current	V_{CC} = MAX, Output control at 4.5 V	'LS373		24	40		24	40	mA
			'LS374		27	40		27	40	

†For conditions shown as MIN or MAX, use the appropriate value specified under recommended operating conditions.
‡All typical values are at V_{CC} = 5 V, T_A = 25°C.
§Not more than one output should be shorted at a time and duration of the short circuit should not exceed one second.

TEXAS INSTRUMENTS
POST OFFICE BOX 655012 • DALLAS, TEXAS 75265

switching characteristics, V_{CC} = 5 V, T_A = 25°C

PARAMETER	FROM (INPUT)	TO (OUTPUT)	TEST CONDITIONS	'LS373			'LS374			UNIT
				MIN	TYP	MAX	MIN	TYP	MAX	
f_{max}			C_L = 45 pF, R_L = 667 Ω, See Notes 2 and 3					50		MHz
t_{PLH}	Data	Any Q			12	18				ns
t_{PHL}					12	18				
t_{PLH}	Clock or enable	Any Q			20	30		15	28	ns
t_{PHL}					18	30		19	28	
t_{PZH}	Output Control	Any Q			15	28		20	26	ns
t_{PZL}					25	36		21	28	
t_{PHZ}	Output Control	Any Q	C_L = 5 pF, R_L = 667 Ω, See Note 3		15	25		15	28	ns
t_{PLZ}	Output Control	Any Q			12	20		12	20	ns

NOTES: 2. Maximum clock frequency is tested with all outputs loaded.
3. Load circuits and voltage waveforms are shown in Section 1.

f_{max} = maximum clock frequency
t_{PLH} = propagation delay time, low-to-high-level output
t_{PHL} = propagation delay time, high-to-low-level output
t_{PZH} = output enable time to high level
t_{PZL} = output enable time to low level
t_{PHZ} = output disable time from high level
t_{PLZ} = output disable time from low level

schematic of inputs and outputs

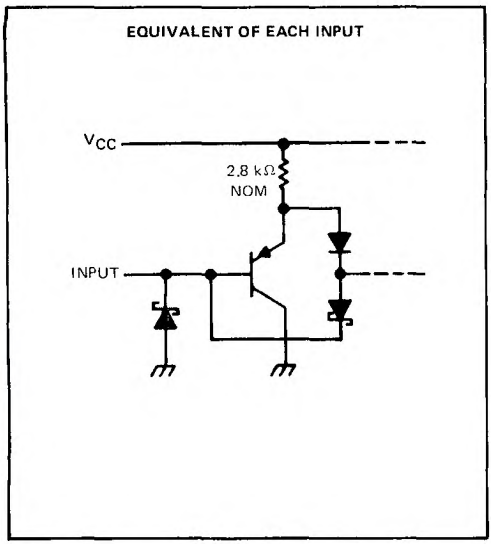

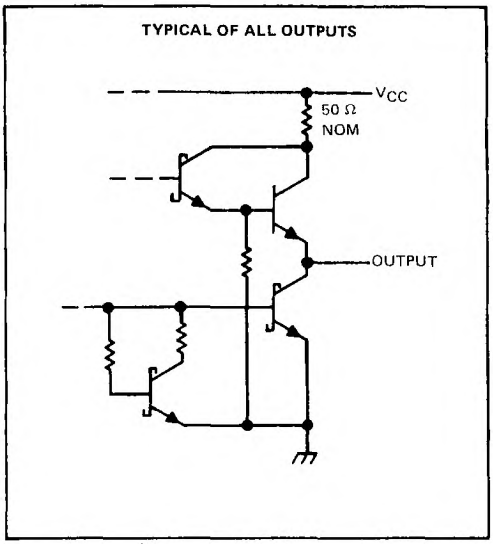

absolute maximum ratings over operating free-air temperature range (unless otherwise noted)

Supply voltage, V_{CC} (see Note 1) . . . . . 7 V
Input voltage . . . . . 5.5 V
Off-state output voltage . . . . . 5.5 V
Operating free-air temperature range: SN54S' . . . . . −55°C to 125°C
SN74S' . . . . . 0°C to 70°C
Storage temperature range . . . . . −65°C to 150°C

NOTE 1: Voltage values are with respect to network ground terminal.

recommended operating conditions

								UNIT
		MIN	NOM	MAX	MIN	NOM	MAX	
Supply voltage, V_{CC}		4.5	5	5.5	4.75	5	5.25	V
High-level output voltage, V_{OH}				5.5			5.5	V
High-level output current, I_{OH}				−2			−6.5	mA
Width of clock/enable pulse, t_w	High	6			6			ns
	Low	7.3			7.3			
Data setup time, t_{su}	'S373	0↓			0↓			ns
	'S374	5↑			5↑			
Data hold time, t_h	[illegible]	10↓			10↓			ns
	[illegible]	2↑			2↑			
Operating free-air temperature, T_A		−55		125	0		70	°C

TEXAS INSTRUMENTS
POST OFFICE BOX 655012 • DALLAS, TEXAS 75265

electrical characteristics over recommended operating free-air temperature range (unless otherwise noted)

PARAMETER	TEST CONDITIONS†				MIN	TYP‡	MAX	UNIT
V_{IH}					2			V
V_{IL}							0.8	V
V_{IK}	V_{CC} = MIN, I_I = −18 mA						−1.2	V
V_{OH}	V_{CC} = MIN, V_{IH} = 2 V, V_{IL} = 0.8 V, I_{OH} = MAX				2.4	3.4		V
					2.4	3.1		
V_{OL}	V_{CC} = MIN, V_{IH} = 2 V, V_{IL} = 0.8 V, I_{OL} = 20 mA						0.5	V
I_{OZH}	V_{CC} = MAX, V_{IH} = 2 V, V_O = 2.4 V						50	μA
I_{OZL}	V_{CC} = MAX, V_{IH} = 2 V, V_O = 0.5 V						−50	μA
I_I	V_{CC} = MAX, V_I = 5.5 V						1	mA
I_{IH}	V_{CC} = MAX, V_I = 2.7 V						50	μA
I_{IL}	V_{CC} = MAX, V_I = 0.5 V						−.	μA
I_{OS}§	V_{CC} = MAX				−40		−100	mA
I_{CC}	V_{CC} = MAX	'S373		outputs high			160	mA
				outputs low			160	
				outputs disabled			190	
		'S374		outputs high			110	
				outputs low			140	
				outputs disabled			160	
			CLK and $\overline{OC}$ at 4 V, D inputs at 0 V				180	

†For conditions shown as MIN or MAX, use the appropriate value specified under recommended operating conditions.
‡All typical values are at V_{CC} = 5 V, T_A = 25°C.
§Not more than one output should be shorted at a time and duration of the short-circuit should not exceed one second.

switching characteristics, V_{CC} = 5 V, T_A = 25°C

PARAMETER	FROM (INPUT)	TO (OUTPUT)	TEST CONDITIONS	'S373			'S374			UNIT
				MIN	TYP	MAX	MIN	TYP	MAX	
f_{max}			C_L = 15 pF, R_L = 280 Ω, See Notes 2 and 4				75	100		MHz
t_{PLH}	Data	Any Q			7	12				ns
t_{PHL}					7	12				
t_{PLH}	Clock or enable	Any Q			7	14		8	15	ns
t_{PHL}					12	18		11	17	
t_{PZH}	Output Control	Any Q			8	15		8	15	ns
t_{PZL}					11	18		11	18	
t_{PHZ}	Output Control	Any Q	C_L = 5 pF, R_L = 280 Ω, See Note 3		6	9		5	9	ns
t_{PLZ}					8	12		7	12	

NOTES: 2. Maximum clock frequency is tested with all outputs loaded.
4. Load circuits and voltage waveforms are shown in Section 1.

f_{max} = maximum clock frequency
t_{PLH} = propagation delay time, low-to-high-level output
t_{PHL} = propagation delay time, high-to-low-level output
t_{PZH} = output enable time to high level
t_{PZL} = output enable time to low level
t_{PHZ} = output disable time from high level
t_{PLZ} = output disable time from low level

TYPICAL APPLICATION DATA

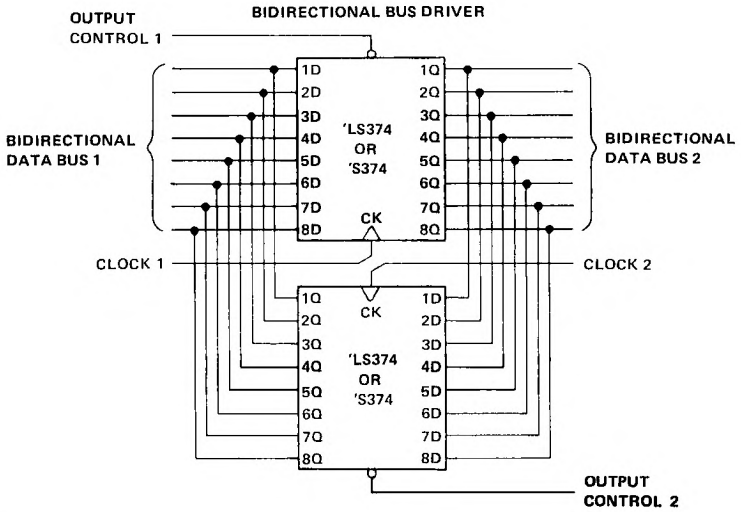

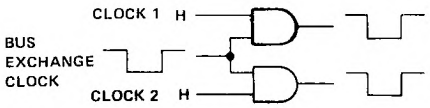

CLOCK CIRCUIT FOR BUS EXCHANGE

EXPANDABLE 4-WORD-BY-8-BIT GENERAL REGISTER FILE

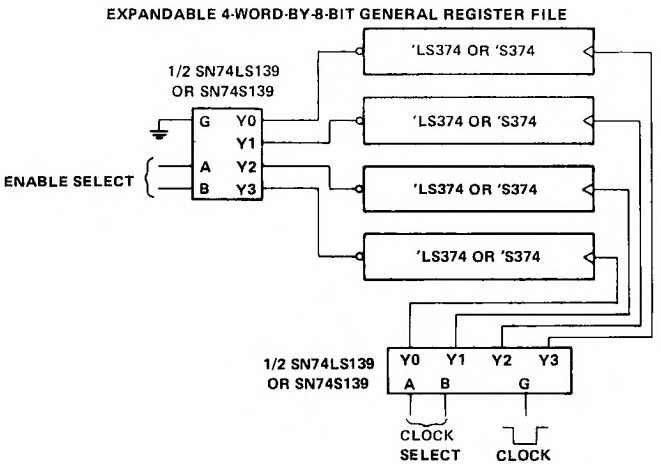

TEXAS INSTRUMENTS
POST OFFICE BOX 655012 • DALLAS, TEXAS 75265

- Supply Voltage and Ground on Corner Pins To Simplify P-C Board Layout

description

The SN54LS375 and SN74LS375 bistable latches are electrically and functionally identical to the SN54LS75 and SN74LS75, respectively. Only the arrangement of the terminals has been changed in the SN54LS375 and SN74LS375.

These latches are ideally suited for use as temporary storage for binary information between processing units and input/output or indicator units. Information present at a data (D) input is transferred to the Q output when the enable (C) is high and the Q output will follow the data input as long as the enable remains high. When the enable goes low, the information (that was present at the data input at the time the transition occurred) is retained at the Q output until the enable goes high.

All inputs are diode-clamped to minimize transmission-line effects and simplify system design. The SN54LS375 is characterized for operation over the full military temperature range of −55°C to 125°C; SN74LS375 is characterized for operation from 0°C to 70°C.

FUNCTION TABLE
(EACH LATCH)

INPUTS			
D	G	Q	$\overline{Q}$
L	H	L	H
H	H	H	L
X	L	Q_0	$\overline{Q}_0$

H = high level, L = low level, X = irrelevant
Q_0 = the level of Q before the high-to-low transition of C.

logic symbol†

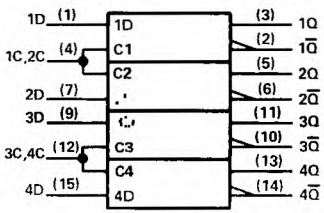

†This symbol is in accordance with ANSI/IEEE Std. 91-1984 and IEC Publication 617-12.
Pin numbers shown are for D, J, N, and W packages.

SN54LS375 . . . J OR W PACKAGE
SN74LS375 . . . D OR N PACKAGE
(TOP VIEW)

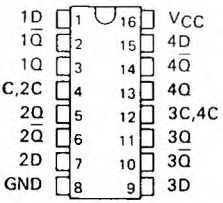

SN54LS375 . . . FK PACKAGE
(TOP VIEW)

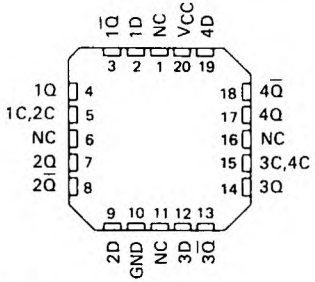

NC – No internal connection

logic diagram (each latch)

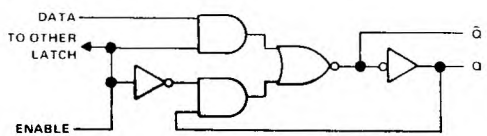

schematics of inputs and outputs

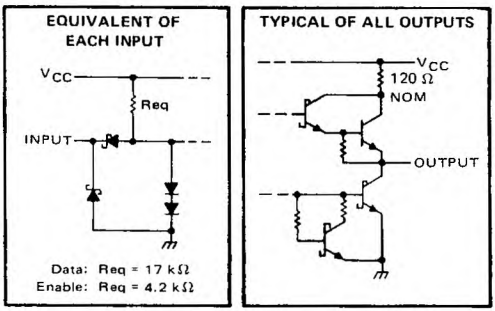

PRODUCTION DATA documents contain information current as of publication date. Products conform to specifications per the terms of Texas Instruments standard warranty. Production processing does not necessarily include testing of all parameters.

absolute maximum ratings over operating free-air temperature range (unless otherwise noted)

Supply voltage, V_{CC} (see Note 1) . . . . . 7 V
Input voltage . . . . . 7 V
Operating free-air temperature range: SN54LS375 . . . . . −55°C to 125°C
SN74LS375 . . . . . 0°C to 70°C
Storage temperature range . . . . . −65°C to 150°C

NOTE 1: Voltage values are with respect to network ground terminal.

recommended operating conditions

		SN54LS375			SN74LS375			UNIT
		MIN	NOM	MAX	MIN	NOM	MAX	
V_{CC}	Supply voltage	4.5	5	5.5	4.75	5	5.25	V
V_{IH}	High-level input voltage	2			2			V
V_{IL}	Low-level input voltage			0.7			0.8	V
I_{OH}	High-level output current			−0.4			−0.4	mA
I_{OL}	Low-level output current			4			8	mA
t_w	Width of enabling pulse	20			20			ns
t_{setup}	Setup time	20			20			ns
t_{hold}	Hold time	0			0			ns
T_A	Operating free-air temperature	−55		125	0		70	°C

electrical characteristics over recommended operating free-air temperature range (unless otherwise noted)

PARAMETER	TEST CONDITIONS†		SN54LS375			SN74LS375			UNIT
			MIN	TYP‡	MAX	MIN	TYP‡	MAX	
V_{IK}	V_{CC} = MIN, I_I = −18 mA				−1.5			−1.5	V
V_{OH}	V_{CC} = MIN, V_{IH} = 2 V, V_{IL} = MAX, I_{OH} = −0.4 mA		2.5	3.5		2.7	3.5		V
V_{OL}	V_{CC} = MIN, V_{IH} = 2 V, V_{IL} = MAX	I_{OL} = 4 mA		0.25	0.4		0.25		V
		I_{OL} = 8 mA					0.35	0.5	
I_I	V_{CC} = MAX, V_I = 7 V	D input			0.1			0.1	mA
		C input			0.4			0.4	
I_{IH}	V_{CC} = MAX V_I = 2.7 V	D input			20			20	µA
		C input			80			80	
I_{IL}	V_{CC} = MAX, V_I = 0.4 V	D			−0.4			−0.4	mA
		C input			−1.6			−1.6	
I_{OS}§	V_{CC} = MAX		−20		−100	−20		−100	mA
I_{CC}	V_{CC} = MAX, See Note 2			6.3	12		6.3	12	mA

† For conditions shown as MIN or MAX, use the appropriate value specified under recommended operating conditions.
‡ All typical values are at V_{CC} = 5 V, T_A = 25°C.
§ Not more than one output should be shorted at a time.
NOTE 2: I_{CC} is tested with all inputs grounded and all outputs open.

switching characteristics, V_{CC} = 5 V, T_A = 25°C (see note 3)

PARAMETER	FROM (INPUT)	TO (OUTPUT)	TEST CONDITIONS	MIN	TYP	MAX	UNIT
t_{PLH}	D	Q	R_L = 2 kΩ, C_L = 15 pF		15	27	ns
t_{PHL}					9	17	
t_{PLH}	D	$\overline{Q}$			12	20	ns
t_{PHL}					7	15	
t_{PLH}	C	Q			15	27	ns
t_{PHL}					14	25	
t_{PLH}	C	$\overline{Q}$			16	30	ns
t_{PHL}					7	15	

NOTE 3: Load circuits and voltage waveforms are shown in Section 1.

TEXAS INSTRUMENTS
POST OFFICE BOX 655012 • DALLAS, TEXAS 75265

OCTOBER 1976 – REVISED MARCH 1988

- Four J-$\overline{K}$ Flip-Flops in a Single Package . . . Can Reduce FF Package Count by 50%
- Common Positive-Edge-Triggered Clocks with Hysteresis . . . Typically 200 mV
- Fully Buffered Outputs
- Typical Clock Input Frequency . . . 45 MHz

SN54376 . . . J PACKAGE
SN74376 . . . N PACKAGE
(TOP VIEW)

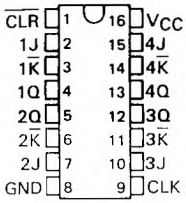

description

These quadruple TTL J-$\overline{K}$ flip-flops incorporate a number of third-generation IC features that can simplify system design and reduce flip-flop package count by as much as 50%. They feature hysteresis at the clock input, fully buffered outputs, and direct clear capability. The positive-edge-triggered SN54376 and SN74376 are directly compatible with most Series 54/74 MSI registers.

The SN54376 is characterized for operation over the full military temperature range of −55°C to 125°C; the SN74376 is characterized for operation from 0°C to 70°C.

FUNCTION TABLE (EACH FLIP-FLOP)

COMMON INPUTS		INPUTS		OUTPUT
CLEAR	CLOCK	J	$\overline{K}$	Q
L	X	X	X	L
H	↑	L	H	Q_0
H	↓	H	H	H
H	↓	L	L	L
H	↑	H	L	TOGGLE
H	L	X	X	Q_0

logic symbol†

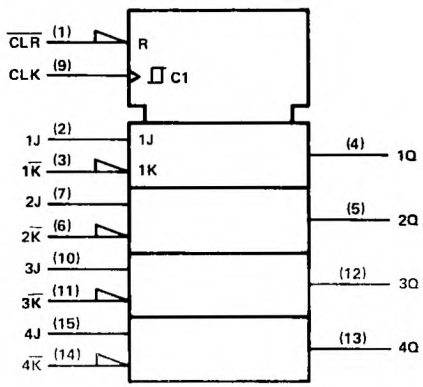

†This symbol is in accordance with ANSI/IEEE Std. 91-1984 and IEC Publication 617-12.

schematics of inputs and outputs

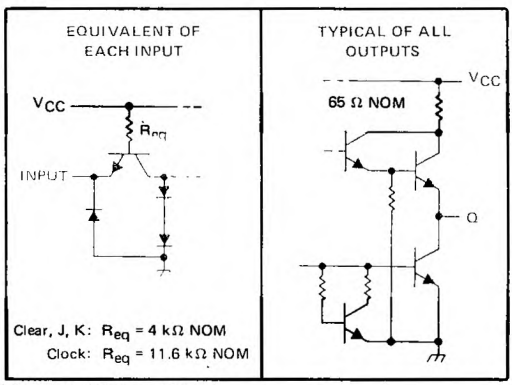

Resistor values shown are nominal.

PRODUCTION DATA documents contain information current as of publication date. Products conform to specifications per the terms of Texas Instruments standard warranty. Production processing does not necessarily include testing of all parameters.

absolute maximum ratings over operating free-air temperature range (unless otherwise noted)

Supply voltage, V_{CC} (see Note 1) . . . . . 7 V
Input voltage . . . . . 5.5 V
Operating free-air temperature range: SN54376 . . . . . −55°C to 125°C
SN74376 . . . . . 0°C to 70°C
Storage temperature range . . . . . −65°C to 150°C

NOTE 1: Voltage values are with respect to network ground terminals.

recommended operating conditions

		SN54376			SN74376			UNIT
		MIN	NOM	MAX	MIN	NOM	MAX	
Supply voltage, V_{CC}		4.5	5	5.5	4.75	5	5.25	V
High-level output current, I_{OH}				−800			−800	μA
Low-level output current, I_{OL}				16			16	mA
Clock frequency		0		30	0		30	MHz
Pulse width, t_w	Clock high	22			22			ns
	Clock low	12			12			
	Preset or clear low	12			12			
Setup time, t_{su}	J, $\overline{K}$ inputs	0↑			0↑			ns
	Clear inactive state	10↑			10↑			
Input hold time, t_h		20↑			20↑			ns
Operating free-air temperature, T_A		−55		125	0		70	°C

↑↓The arrow indicates the edge of the clock pulse used for reference: ↑ for the rising edge, ↓ for the falling edge.

electrical characteristics over recommended operating free-air temperature range (unless otherwise noted)

PARAMETER		TEST CONDITIONS†		MIN	TYP‡	MAX	UNIT
V_{IH}	High-level input voltage			2			V
V_{IL}	Low-level input voltage					0.8	V
V_{IK}	Input clamp voltage	V_{CC} = MIN,	I_I = −12 mA			−1.5	V
V_{OH}	High-level output voltage	V_{CC} = MIN, V_{IL} = 0.8 V,	V_{IH} = 2 V, I_{OH} = −800 μA	2.4	3.4		V
V_{OL}	Low-level output voltage	V_{CC} = MIN, V_{IL} = 0.8 V,	V_{IH} = 2 V, I_{OL} = 16 mA		0.2	0.4	V
I_I	Input current at maximum input voltage	V_{CC} = MAX,	V_I = 5.5 V			1	mA
I_{IH}	High-level input current	V_{CC} = MAX,	V_I = 2.4 V			40	μA
I_{IL}	Low-level input current	V_{CC} = MAX,	V_I = 0.4 V			−1.6	mA
I_{OS}	Short-circuit output current§	V_{CC} = MAX		−30		−85	mA
I_{CC}	Supply current	V_{CC} = MAX			52	74	mA

†For conditions shown as MIN or MAX, use the appropriate value specified under recommended operating conditions.
‡All typical values are at V_{CC} = 5 V, T_A = 25°C.
§Not more than one output should be shorted at a time.

switching characteristics, V_{CC} = 5 V, T_A = 25°C

PARAMETER		TEST CONDITIONS	MIN	TYP	MAX	UNIT
f_{max}	Maximum clock frequency	C_L = 15 pF, R_L = 400 Ω, See Note 2	30	45		MHz
t_{PHL}	Propagation delay time, high-to-low-level output from clear			17	30	ns
t_{PLH}	Propagation delay time, low-to-high-level output from clock			22	35	ns
t_{PHL}	Propagation delay time, high-to-low-level output from clock			24	35	ns

NOTE 2: Load circuits and voltage waveforms are shown in Section 1.

TEXAS INSTRUMENTS
POST OFFICE BOX 655012 • DALLAS, TEXAS 75265

- 'LS377 and 'LS378 Contain Eight and Six Flip-Flops, Respectively, with Single-Rail Outputs
- 'LS379 Contains Four Flip-Flops with Double-Rail Outputs
- Individual Data Input to Each Flip-Flop
- Applications Include:
  Buffer/Storage Registers
  Shift Registers
  Pattern Generators

description

These monolithic, positive-edge-triggered flip-flops utilize TTL circuitry to implement D-type flip-flop logic with an enable input. The 'LS377, 'LS378, and 'LS379 devices are similar to 'LS273, 'LS174, and 'LS175, respectively, but feature a common enable instead of a common clear.

Information at the D inputs meeting the setup time requirements is transferred to the Q outputs on the positive-going edge of the clock pulse if the enable input $\overline{G}$ is low. Clock triggering occurs at a particular voltage level and is not directly related to the transition time of the positive-going pulse. When the clock input is at either the high or low level, the D input signal has no effect at the output. The circuits are designed to prevent false clocking by transitions at the $\overline{G}$ input.

These flip-flops are guaranteed to respond to clock frequencies ranging from 0 to 30 MHz while maximum clock frequency is typically 40 megahertz. Typical power dissipation is 10 milliwatts per flip-flop.

FUNCTION TABLE
(EACH FLIP-FLOP)

INPUTS			OUTPUTS	
$\overline{G}$	CLOCK	DATA	Q	$\overline{Q}$
H	X	X	Q_0	$\overline{Q}_0$
L	↑	H	H	L
L	↑	L	L	H
X	L	X	Q_0	Q_0

SN54LS377 . . . J PACKAGE
SN74LS377 . . . DW OR N PACKAGE
(TOP VIEW)

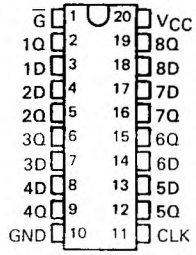

SN54LS377 . . . FK PACKAGE
(TOP VIEW)

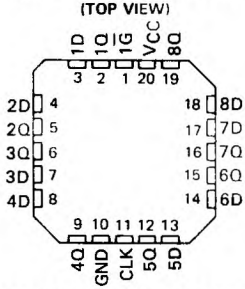

SN54LS378 . . . J OR W PACKAGE
SN74LS378 . . . D OR N PACKAGE
(TOP VIEW)

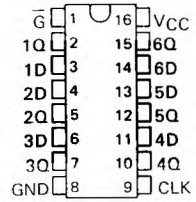

SN54LS378 . . . FK PACKAGE
(TOP VIEW)

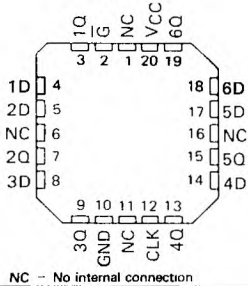

NC – No internal connection

PRODUCTION DATA documents contain information current as of publication date. Products conform to specifications per the terms of Texas Instruments standard warranty. Production processing does not necessarily include testing of all parameters.

SN54LS379 . . . J OR W PACKAGE
SN74LS379 . . . D OR N PACKAGE
(TOP VIEW)

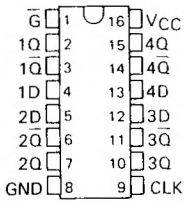

SN54LS379 . . . FK PACKAGE
(TOP VIEW)

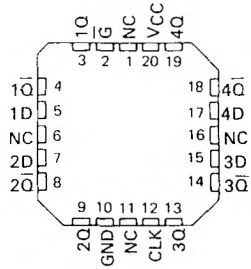

NC No internal connection

2 TTL Devices

logic diagram (positive logic)

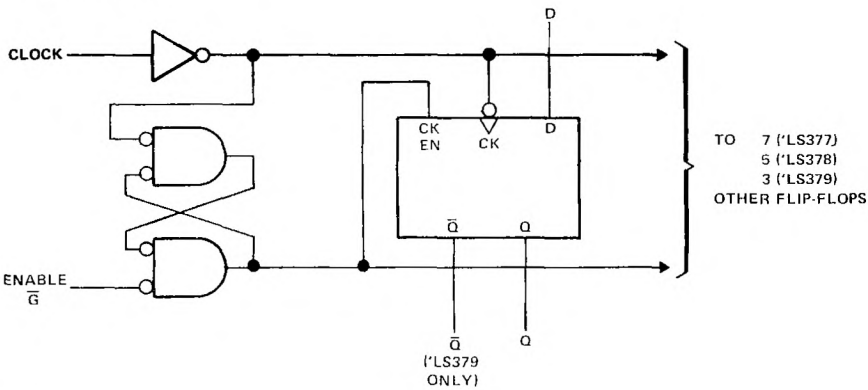

logic symbols†

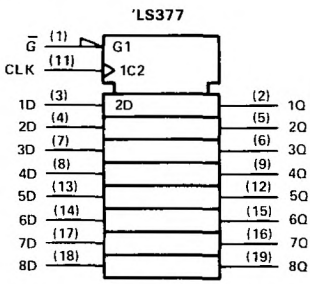

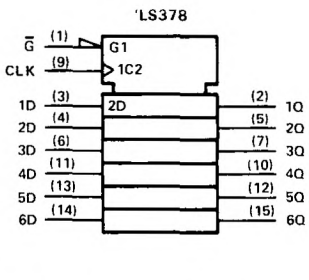

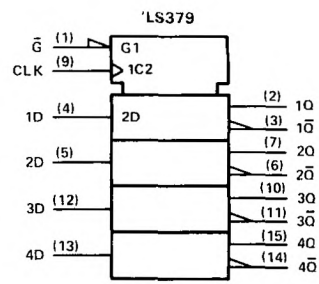

† These symbols are in accordance with ANSI/IEEE Std 91-1984 and IEC Publication 617-12.
Pin numbers shown are for DW, J, and N packages.

TEXAS INSTRUMENTS
POST OFFICE BOX 655012 • DALLAS, TEXAS 75265

schematics of inputs and outputs

EQUIVALENT OF DATA INPUT

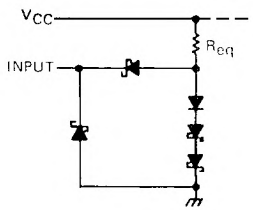

'LS379 : R_{eq} = 30 kΩ NOM
others : R_{eq} = 25 kΩ NOM

EQUIVALENT OF CLOCK INPUTS

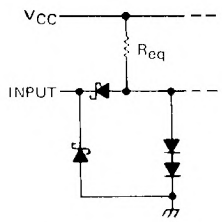

'LS379 : R_{eq} = 17 kΩ NOM
others : R_{eq} = 20 kΩ NOM

EQUIVALENT OF ENABLE INPUTS

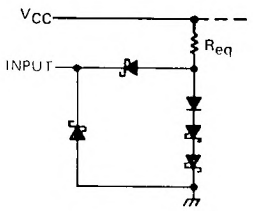

'LS379 R_{eq} = 25 kΩ NOM
others R_{eq} = 20 kΩ NOM

TYPICAL OF ALL OUTPUTS

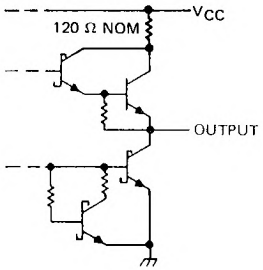

absolute maximum rating over operating free-air temperature range (unless otherwise noted)

Supply voltage, V_{CC} (see Note 1) . . . . . 7 V
Input voltage . . . . . 7 V
Operating free-air temperature range: SN54LS' . . . . . −55°C to 125°C
SN74LS' . . . . . 0°C to 70°C
Storage temperature range . . . . . −65°C to 150°C

NOTE 1 Voltage values are with respect to network ground terminal.

recommended operating conditions

		SN54LS'			SN74LS'			UNIT
		MIN	NOM	MAX	MIN	NOM	MAX	
Supply voltage, V_{CC}		4.5	5	5.5	4.75	5	5.25	V
High-level output current, I_{OH}				−400			−400	μA
Low-level output current, I_{OL}				4			8	mA
Clock frequency, f_{clock}		0		30	0		30	MHz
Width of clock pulse, t_w		20			20			ns
Setup time, t_{su}	Data input				20↑			ns
	Enable active-state				25↑			
	Enable inactive-state	10↑			10↑			
Hold time, t_h	Data and enable	5↑			5↑			ns
Operating free-air temperature, T_A		−55		125	0		70	°C

↑The arrow indicates that the rising edge of the clock pulse is used for reference.

electrical characteristics over recommended operating free-air temperature range (unless otherwise noted)

PARAMETER		TEST CONDITIONS†			SN54LS'			SN74LS'			UNIT
					MIN	TYP‡	MAX	MIN	TYP‡	MAX	
V_{IH}	High-level input voltage				2			2			V
V_{IL}	Low-level input voltage						0.7			0.8	V
V_{IK}	Input clamp voltage	V_{CC} = MIN,	I_I = −18 mA				−1.5			−1.5	V
V_{OH}	High-level output voltage	V_{CC} = MIN,	V_{IH} = 2 V,		2.5	3.5		2.7	3.5		V
		V_{IL} = V_{IL} max,	I_{OH} = −400 μA								
V_{OL}	Low-level output voltage	V_{CC} = MIN,	V_{IH} = 2 V,	I_{OL} = 4 mA		0.25	0.4		0.25	0.4	V
		V_{IL} = V_{IL} max		I_{OL} = 8 mA					0.35	0.5	
I_I	Input current at maximum input voltage	V_{CC} = MAX,	V_I = 7 V				0.1			0.1	mA
I_{IH}	High-level input current	V_{CC} = MAX,	V_I = 2.7 V				20			20	μA
I_{IL}	Low-level input current	V_{CC} = MAX,	V_I = 0.4 V				−0.4			−0.4	mA
I_{OS}	Short-circuit output current§	V_{CC} = MAX			−20		−100	−20		−100	mA
I_{CC}	Supply current	V_{CC} = MAX,	See Note 2	'LS377		17	28		17	28	mA
				'LS378		13	22		13	22	mA
				'LS379		9	15		9	15	mA

† For conditions shown as MIN or MAX, use the appropriate value specified under recommended operating conditions.
‡ All typical values are at V_{CC} = 5 V, T_A = 25°C.
§ Note more than one input should be shorted at a time, and duration of the short-circuit should not exceed one second.
NOTE 2: With all outputs open and ground applied to all data and enable inputs, I_{CC} is measured after a momentary ground, then 4.5 V, is applied to clock.

switching characteristics, V_{CC} = 5 V, T_A = 25°C

PARAMETER		TEST CONDITIONS	MIN	TYP	MAX	UNIT
f_{max}	Maximum clock frequency	C_L = 15 pF,	30	40		MHz
t_{PLH}	Propagation delay time, low-to-high-level output from clock	R_L = 2 kΩ		17	27	ns
t_{PHL}	Propagation delay time, high-to-low-level output from clock	See Note 3		18	27	ns

NOTE 3: Load circuits and voltage waveforms are shown in Section 1.

TEXAS INSTRUMENTS
POST OFFICE BOX 655012 • DALLAS, TEXAS 75265

D2430, JANUARY 1981 – REVISED MARCH 1988

PIN DESIGNATIONS

DESIGNATION	PIN NOS.	FUNCTION
A3, A2, A1, A0	17, 19, 1, 3	WORD A INPUTS
B3, B2, B1, B0	16, 18, 2, 4	WORD B INPUTS
S2, S1, S0	7, 6, 5	FUNCTION-SELECT INPUTS
C_n	15	CARRY INPUT FOR ADDITION, INVERTED CARRY INPUT FOR SUBTRACTION
F3, F2, F1, F0	12, 11, 9, 8	FUNCTION OUTPUTS
$\overline{P}$ ('LS381A 'S381 ONLY)	14	ACTIVE-LOW CARRY PROPAGATE OUTPUT
$\overline{G}$ ('LS381A 'S381 ONLY)	13	ACTIVE-LOW CARRY GENERATE OUTPUT
C_{n+4} ('LS382A ONLY)	14	RIPPLE-CARRY OUTPUT
OVR ('LS382A ONLY)	13	OVERFLOW OUTPUT
V_{CC}	20	SUPPLY VOLTAGE
GND	10	GRO

SN54LS381A, SN54S381 . . . J OR W PACKAGE
SN74LS381A, SN74S381 . . . DW OR N PACKAGE
(TOP VIEW)

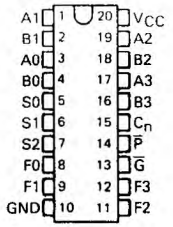

SN54LS381A, SN54S381 . . . FK PACKAGE
(TOP VIEW)

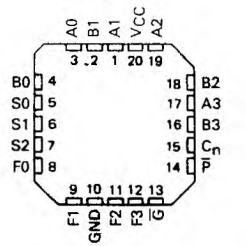

SN54LS382A . . . J OR W PACKAGE
SN74LS382A . . . DW OR N PACKAGE
(TOP VIEW)

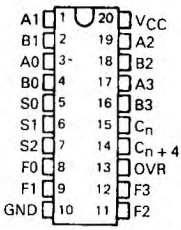

SN54LS382A . . . FK PACKAGE
(TOP VIEW)

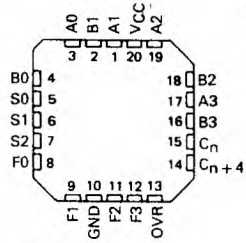

- **Fully Parallel 4-Bit ALUs in 20-Pin Package for 0.300-Inch Row Spacing**
- **Ideally Suited for High-Density Economical Processors**
- **'LS381A and 'S381 Feature $\overline{G}$ and $\overline{P}$ Outputs for Look-Ahead Carry Cascading**
- **'LS382A Features Ripple Carry (C_{n+4}) and Overflow (OVR) Outputs**
- **Arithmetic and Logic Operations Selected Specifically to Simplify System Implementation:**
  - **A Minus B**
  - **B Minus A**
  - **A Plus B**
  - **and Five Other Functions**

FUNCTION TABLE

SELECTION			ARITHMETIC/LOGIC
S2	S1	S0	OPERATION
L	L	L	CLEAR
L	L	H	B MINUS A
L	H	L	A MINUS B
L	H	H	A PLUS B
H	L	L	A ⊕ B
H	L	H	A + B
H	H	L	AB
H	H	H	PRESET

H = high level, L = low level

description

The 'LS381A, 'S381 and 'LS382A are low-power Schottky and Schottky TTL arithmetic logic units (ALUs)/function generators that perform eight binary arithmetic/logic operations on two 4-bit words as shown in the function table. The exclusive-OR, AND, or OR function of the two Boolean variables is provided without the use of external circuitry. Also, the outputs can be cleared (low) or preset (high) as desired. The 'LS381A and 'S381 provide two cascade outputs ($\overline{P}$ and $\overline{G}$ for expansion utilizing SN54S182/SN74S182 look-ahead carry generators. The 'LS382 provides a C_{n+4}) output to ripple the carry to the C_n input of the next stage. The 'LS382A detects and indicates two's complement overflow condition via the OVR output. The overflow output is logically equivalent to $C_{n+3} \oplus C_{n+4}$. When the 'LS382A is cascaded to handle word lengths longer than four bits in length, only the most significant overflow (OVR) output is used.

The SN54' family is characterized for operation over the full military temperature range of −55°C to 125°C. The SN74' family is characterized for operation from 0°C to 70°C.

PRODUCTION DATA documents contain information current as of publication date. Products conform to specifications per the terms of Texas Instruments standard warranty. Production processing does not necessarily include testing of all parameters.

function table

Certain differences exist in the $\overline{G}$, $\overline{P}$ ('LS381A, 'S381) and OVR, C_{n+4} ('LS382A) function table compared with similar parts from other technologies and other vendors. No differences exist in the arithmetic modes (B minus A, A minus B, and A plus B), where these outputs perform valuable cascade functions. There are slight differences in the other modes (CLEAR, A + B, A ⊕ B, AB, and PRESET), where these outputs are strictly "don't care".

This function table is a condensed version and assumes for A_n that A0, A1, A2, and A3 inputs all agree and for B_n that B0, B1, B2, and B3 inputs all agree. This table is intended to point out the response of these $\overline{G}$, $\overline{P}$ ('LS381A, 'S381) and OVR, C_{n+4} ('LS382A) outputs in all modes of operation to facilitate incoming inspection.

FUNCTION TABLE

ARITHMETIC/LOGIC	INPUTS						OUTPUTS				('LS381A, 'S381)		('LS382A)	
OPERATION	S2	S1	S0	C_n	A_n	B_n	F3	F2	F1	F0	$\overline{G}$	$\overline{P}$	OVR	C_{n+4}
CLEAR	L	L	L	X	X	X	L	L	L	L	H	H	L	L
B MINUS A	L	L	H	L	L	L	H	H	H	H	H	L	L	L
				L	L	H	L	L	L	L	H	L	L	H
				L	H	L	L	L	L	H	H	L	L	L
				L	H	H	H	H	H	H	H	L	L	L
				H	L	L	L	L	L	L	H	L	L	H
				H	L	H	H	H	H	H	L	H	L	H
				H	H	L	H	H	L	H	H	H	L	L
				H	H	H	L	L	L	L	H	L	L	H
A MINUS B	L	H	L	L	L	L	H	H	H	H	H	L	L	L
				L	L	H	L	L	L	H	H	L	L	H
				L	H	L	H	H	H	L	H	L	L	L
				L	H	H	H	H	H	H	H	L	L	L
				H	L	L	L	L	L	L	H	L	L	H
				H	L	H	L	L	L	H	H	H	L	L
				H	H	L	H	H	H	H	L	H	L	H
				H	H	H	L	L	L	L	H	L	L	H
A PLUS B	L	H	H	L	L	L	L	L	L	L	H	H	L	L
				L	L	H	H	H	H	H	H	L	L	L
				L	H	L	H	H	H	H	H	L	L	L
				L	H	H	H	H	H	L	L	H	L	H
				H	L	L	L	L	L	H	H	H	L	L
				H	L	H	L	L	L	L	H	L	L	H
				H	H	L	L	L	L	L	H	L	L	H
				H	H	H	H	H	H	H	L	H	L	H
A ⊕ B	H	L	L	X	L	L	L	L	L	L	H	H	L	L
				L	L	H	H	H	H	H	H	L	L	L
				H	L	H	H	H	H	H	H	L	L	H
				L	H	L	H	H	H	H	H	L	L	L
				H	H	L	H	H	H	H	H	L	H	H
				X	H	H	L	L	L	L	H	H	L	L
A + B	H	L	H	X	L	L	L	L	L	L	H	H	L	L
				L	L	H	H	H	H	H	H	L	L	L
				H	L	H	H	H	H	H	H	L	H	H
				L	H	L	H	H	H	H	H	L	L	L
				H	H	L	H	H	H	H	H	L	H	H
				L	H	H	H	H	H	H	H	L	L	L
				H	H	H	H	H	H	H	H	L	H	H
AB	H	H	L	X	L	L	L	L	L	L	H	H	L	L
				X	L	H	L	L	L	L	H	H	L	L
				X	H	L	L	L	L	L	H	H	L	L
				L	H	H	H	H	H	H	H	L	L	L
				H	H	H	H	H	H	H	H	L	H	H
PRESET	H	H	H	L	X	X	H	H	H	H	H	L	L	L
				H	X	X	H	H	H	H	H	L	H	H

logic diagram (positive logic) 'LS381A, 'LS382A

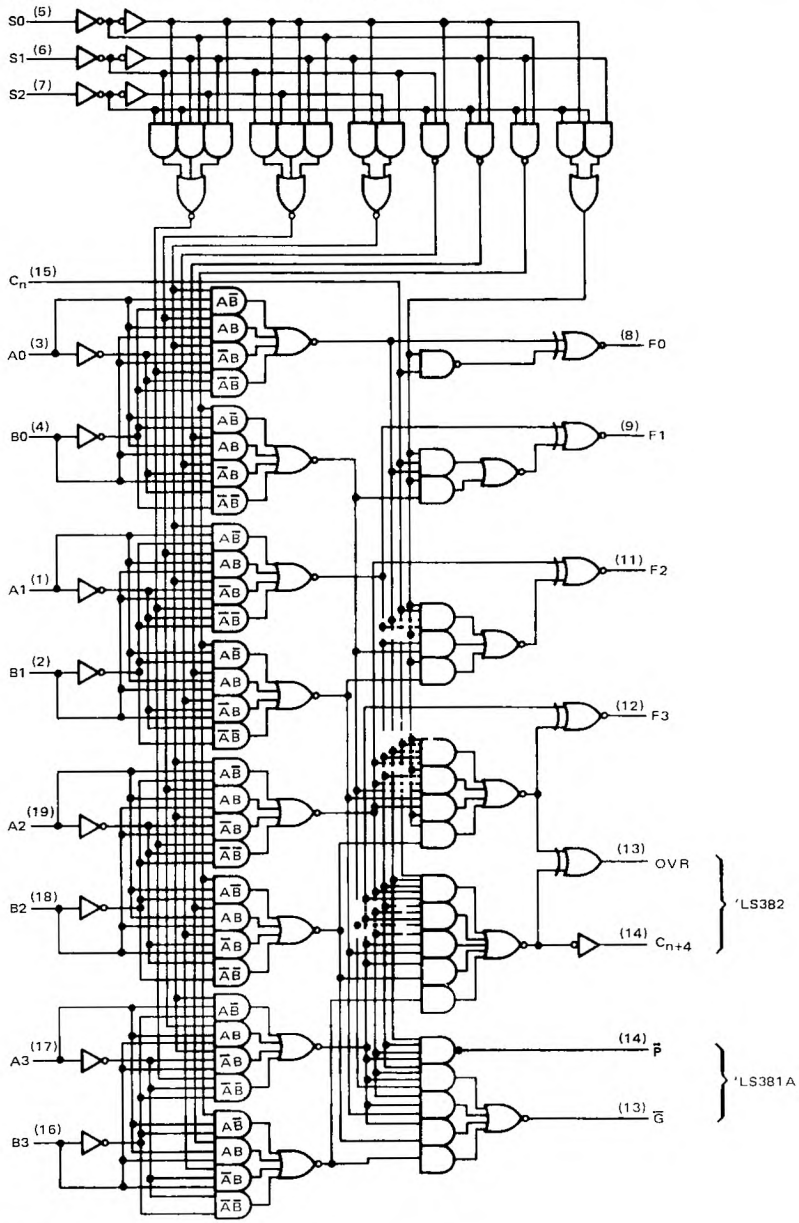

Pin numbers shown are for DW, J, N, and W packages

logic diagram and schematics of inputs and outputs

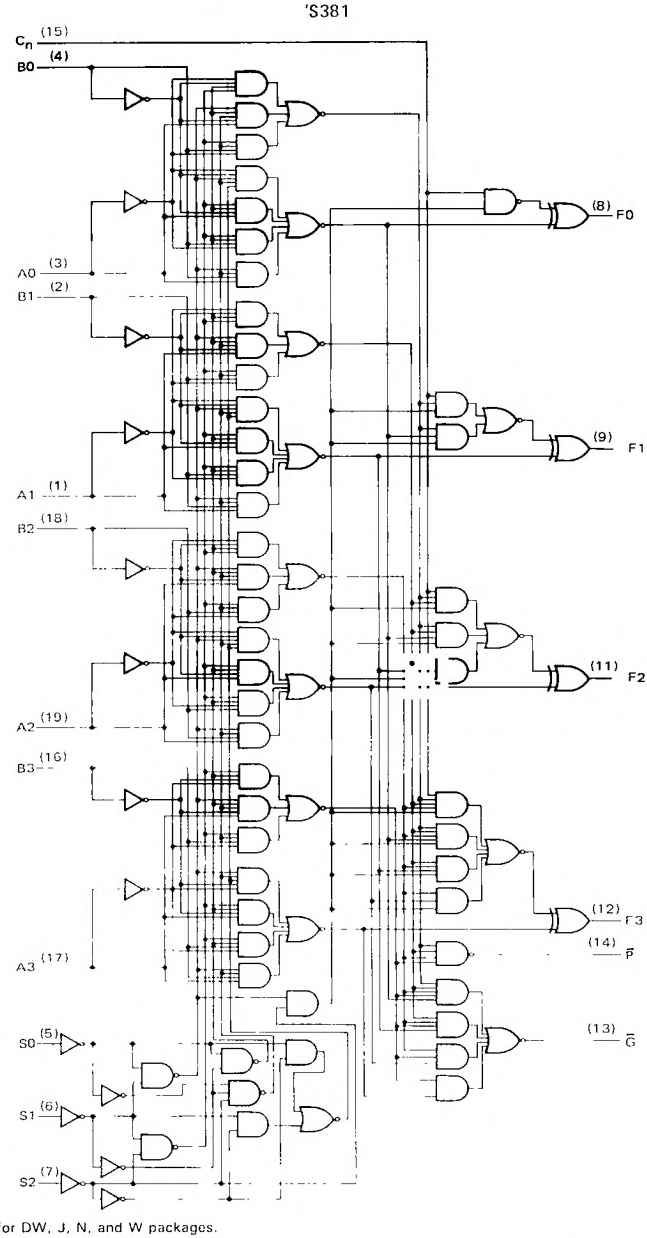

Pin numbers shown are for DW, J, N, and W packages.

TEXAS INSTRUMENTS
POST OFFICE BOX 655012 • DALLAS, TEXAS 75265

logic symbols†

'LS381A, 'S381

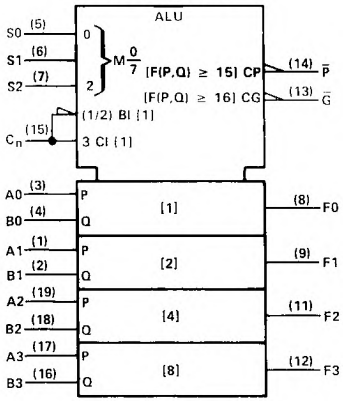

'LS382 A

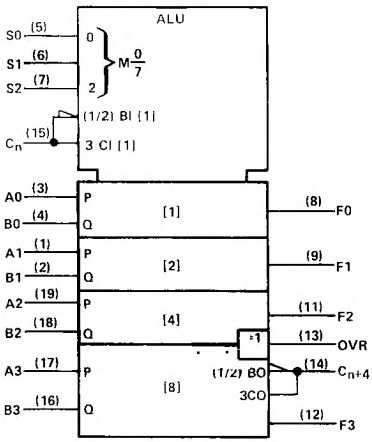

†These symbols are in accordance with ANSI/IEEE Std 91-1984 and IEC Publication 617-12.
Pin numbers shown are for DW, J, N, and W packages.

schematics of inputs and outputs

'LS381, 'LS382A

EQUIVALENT OF EACH INPUT

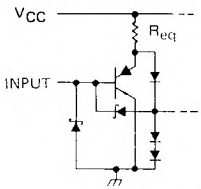

Any S R_{eq} = 10 kΩ
C_n ('LS381A): R_{eq} = 2.5 kΩ
All others: R_{eq} = 2 kΩ

TYPICAL OF ALL OUTPUTS

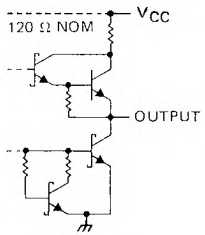

'S381

EQUIVALENT OF EACH INPUT

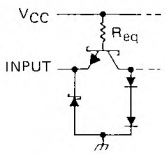

Any A or B: R_{eq} = 1 kΩ
C_n R_{eq} = 800 Ω
Any S: R_{eq} = 6 kΩ

TYPICAL OF ALL OUTPUTS

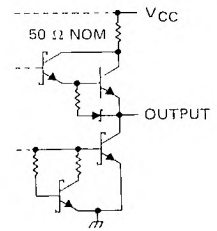

absolute maximum ratings over operating free-air temperature range (unless otherwise noted)

Supply voltage, V_{CC} (See Note 1) . . . . . 7 V
Input voltage . . . . . 7 V
Operating free-air temperature range: SN54LS381A, SN54LS382A . . . . . −55°C to 125°C
SN74LS381A, SN74LS382A . . . . . 0°C to 70°C
Storage temperature range . . . . . −65°C to 150°C

NOTE 1: Voltage values are with respect to the network ground terminal.

recommended operating conditions

			SN54LS'			SN74LS'			UNIT
			MIN	NOM	MAX	MIN	NOM	MAX	
V_{CC}	Supply voltage		4.5	5	5.5	4.75	5	5.25	V
V_{IH}	High-level input voltage		2			2			V
V_{IL}	Low-level input voltage				0.7			0.8	V
I_{OH}	High-level output current				−0.4			−0.4	mA
I_{OL}	Low-level output current	$\overline{G}$ output of 'LS381A			16			16	mA
		All other outputs			4			8	
T_A	Operating free-air temperature		−55		125	0		70	°C

electrical characteristics over recommended operating free-air temperature range (unless otherwise noted)

PARAMETER		TEST CONDITIONS†		SN54LS'			SN74LS'			UNIT
				MIN	TYP‡	MAX	MIN	TYP‡	MAX	
V_{IK}		V_{CC} = MIN, I_I = −18 mA				−1.5			−1.5	V
V_{OH}		V_{CC} = MIN, V_{IH} = 2 V, V_{IL} = MAX, I_{OH} = −0.4 mA		2.5	3.4		2.7	3.4		V
V_{OL}	$\overline{G}$ ('LS381A)	V_{CC} = MIN, V_{IH} = 2 V, V_{IL} = MAX	I_{OL} = 16 mA		0.47	0.7		0.47	0.7	V
	Other outputs		I_{OL} = 4 mA		0.25	0.4		0.25	0.4	
			I_{OL} = 8 mA					0.35	0.5	
I_I		V_{CC} = MAX, V_I = 7 V				0.1			0.1	mA
I_{IH}	Any S	V_{CC} = MAX, V_I = 2.7 V				20			20	µA
	Any A or B					100			100	
	C_n ('LS381A)					80			80	
	C_n ('LS382A)					100			100	
I_{IL}	Any S	V_{CC} = MAX, V_I = 0.4 V				−0.2			−0.2	mA
	Any A or B					−1			−1	
	C_n ('LS381A)					−0.8			−0.8	
	C_n ('LS382A)					−0.8			−0.8	
I_{OS}§		V_{CC} = MAX		−20		−100	−20		−100	mA
I_{CC}		V_{CC} = MAX, All inputs grounded, outputs open			35	65		35	65	mA

† For conditions shown as MIN or MAX, use the appropriate value specified under recommended operating conditions.
‡ All typical values are at V_{CC} = 5 V, T_A = 25°C.
§ Not more than one output should be shorted at a time, and duration of the short circuit should not exceed one second.

TEXAS INSTRUMENTS
POST OFFICE BOX 655012 • DALLAS, TEXAS 75265

switching characteristics, V_{CC} = 5 V, T_A = 25°C (see note 3)

PARAMETER	FROM (INPUT)	TO (OUTPUT)	TEST CONDITIONS	'LS381A			'LS382A			UNIT
				MIN	TYP	MAX	MIN	TYP	MAX	
t_{PLH}	Cn	Any F	R_L = 2 kΩ, C_L = 15 pF		18	27		18	27	ns
t_{PHL}					14	21		14	21	
t_{PLH}	Any A or B	$\overline{G}$			20	30				ns
t_{PHL}					21	33				
t_{PLH}	Any A or B	$\overline{P}$			21	33				ns
t_{PHL}					23	33				
t_{PLH}	A_i or B_i	F_i			20	30		20	30	ns
t_{PHL}					15	23		15	23	
t_{PLH}	S0, S1, S2	F_i			35	53		35	53	ns
t_{PHL}					34	51		34	51	
t_{PLH}	S0, S1, S2	$\overline{G}$ or $\overline{P}$			31	47				ns
t_{PHL}					32	48				
t_{PLH}	Any A or B	C_{n+4}						28	42	ns
t_{PHL}								26	39	
t_{PLH}	Any A or B	OVR						23	35	ns
t_{PHL}								27	41	
t_{PLH}	S0, S1, S2	C_{n+4} or OVR						38	57	ns
t_{PHL}								36	54	
t_{PLH}	C_n	OVR						10	15	ns
t_{PHL}								13	23	
t_{PLH}	C_n	C_{n+4}						13	21	ns
t_{PHL}								11	20	

NOTE 3: Load circuits and voltage waveforms are shown in Section 1.

absolute maximum ratings over operating free-air temperature range (unless otherwise noted)

Supply voltage, V_{CC} (see Note 1) . . . . . 7 V
Input voltage . . . . . 5.5 V
Interemitter voltage (see Note 2) . . . . . 5.5 V
Operating free-air temperature range: SN54S381 . . . . . −55°C to 125°C
SN74S381 . . . . . 0°C to 70°C
Storage free-air temperature range . . . . . −65°C to 150°C

NOTES: 1. Voltage values, except interemitter voltage, are with respect to network ground terminal.
2. This is the voltage between two emitters of a multiple-emitter transistor. For this circuit, this rating applies to each A input in conjunction with its respective B input; for example A0 with B0, etc.

recommended operating conditions

	SN54S381			SN74S381			UNIT
	MIN	NOM	MAX	MIN	NOM	MAX	
Supply voltage, V_{CC}	4.5	5	5.5	4.75	5	5.25	V
High-level output current, I_{OH}			−1			−1	mA
Low-level output current, I_{OL}			20			20	mA
Operating free-air temperature, T_A	−55		125	0		70	°C

electrical characteristics over recommended operating free-air temperature range (unless otherwise noted)

PARAMETER			TEST CONDITIONS†		MIN	TYP‡	MAX	UNIT
V_{IH}	High-level input voltage				2			V
V_{IL}	Low-level input voltage						0.8	V
V_{IK}	Input clamp voltage		V_{CC} = MIN,	I_I = −18 mA			−1.2	V
V_{OH}	High-level output voltage		V_{CC} = MIN, V_{IL} = 0.8 V,	V_{IH} = 2 V, I_{OH} = −1 mA	2.4 2.7	3.4 3.4		V
V_{OL}	Low-level output voltage		V_{CC} = MIN, V_{IL} = 0.8 V,	V_{IH} = 2 V, I_{OL} = 20 mA			0.5	V
I_I	Input current at maximum input voltage		V_{CC} = MAX,	V_I = 5.5 V			1	mA
I_{IH}	High-level input current	Any S input	V_{CC} = MAX,	V_I = 2.7 V			50	μA
		C_n					250	
		All others						
I_{IL}	Low-level input current	Any S input	V_{CC} = MAX,	V_I = 0.5 V				mA
		C_n					−8	
		All others					−6	
I_{OS}	Short-circuit output current§		V_{CC} = MAX		−40		−100	mA
I_{CC}	Supply current		V_{CC} = MAX			105	160	mA

†For conditions shown as MIN or MAX, use the appropriate value specified under recommended operating conditions.
‡All typical values are at V_{CC} = 5 V, T_A = 25°C.
§Not more than one output should be shorted at a time

switching characteristics, V_{CC} = 5 V, T_A = 25°C

PARAMETER	FROM (INPUT)	TO (OUTPUT)	TEST CONDITIONS	MIN	TYP	MAX	UNIT
t_{PLH}	C_n	Any F	C_L = 15 pF, R_L = 280 Ω, See Note 3		10	17	ns
t_{PHL}					10	17	
t_{PLH}	Any A or B	$\overline{G}$			12	20	ns
t_{PHL}					12	20	
t_{PLH}	Any A or B	$\overline{P}$			11	18	ns
t_{PHL}					11	18	
t_{PLH}	A_i or B_i	F_i			18	27	ns
t_{PHL}					16	25	
t_{PLH}	Any S	Any			18	30	ns
t_{PHL}					18	30	

NOTE 3: Load circuits and voltage waveforms are shown in Section 1.

TEXAS INSTRUMENTS
POST OFFICE BOX 655012 • DALLAS, TEXAS 75265

D2419, JANUARY 1981 – REVISED MARCH 1988

- Two's-Complement Multiplication
- Magnitude Only Multiplication
- Cascadable for Any Number of Bits
- 8-Bit Parallel Multiplicand Data Input
- Serial Multiplier Data Input
- Serial Data Output for Multiplication Product
- 40 MHz Typical Maximum Clock Frequency

SN54LS384 . . . J PACKAGE
SN74LS384 . . . N PACKAGE
(TOP VIEW)

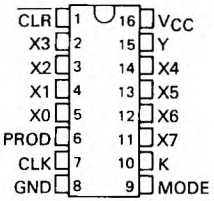

SN54LS384 . . . FK PACKAGE
(TOP VIEW)

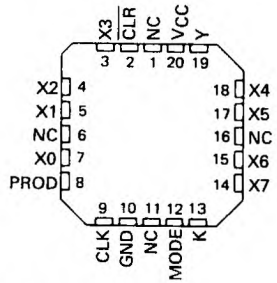

NC – No internal connection

description

The 'LS384 is an 8-bit by 1-bit sequential logic element that performs digital multiplication of two numbers represented in two's-complement form to produce a two's-complement product without external correction by using Booth's algorithm internally. The device accepts an 8-bit multiplicand (X input) and stores this data in eight internal latches. These X latches are controlled via the clear input. When the clear input is low, all internal flip-flops are cleared and the X latches are opened to accept new multiplicand data. When the clear input is high, the latches are closed and are insensitive to X input changes.

The multiplier word data is passed by the Y input in a serial bit stream, least significant bit first. The product is clocked out the PROD output, least significant bit first.

The multiplication of an m-bit multiplicand by an n-bit multiplier results in an (m + n)-bit product. The 'LS384 must be clocked for m + n clock cycles to produce this two's complement product. The n-bit multiplier (Y-input) sign bit data must be extended for the remaining m bits to complete the multiplication cycle.

The device also contains a K input so that devices can be cascaded for longer length X words. The PROD output of one device is connected to the K input of the succeeding device when cascading. The mode input is used to indicate which device contains the most significant bit. The mode input is wired high or low depending on the position of the 8-bit slice in the total X word length. The device with the most significant bit is wired low and all lower order bit packages are wired high.

The SN54LS384 will be characterized for operation over the full military temperature range from −55°C to 125°C. The SN74LS384 will be characterized for operation from 0°C to 70°C

PRODUCTION DATA documents contain information current as of publication date. Products conform to specifications per the terms of Texas Instruments standard warranty. Production processing does not necessarily include testing of all parameters.

FUNCTION TABLE

INPUTS				INTERNAL	OUTPUT	FUNCTION
$\overline{CLR}$	CLK	X_i	Y	Y_{-1}	PROD	
L	X	Data	X	L	L	Load new multiplicand and clear internal sum and carry registers
H	↑	X	L	L	Output	Shift sum register
H	↑	X	L	H	per	Add multiplicand to sum register and shift
H	↑	X	H	L	Booth's	Subtract multiplicand from sum register and shift
H	↑	X	H	H	algorithm	Shift sum register

H = high-level, L = low-level, X = irrevelant, ↑ = low-to-high-level transition

schematics of inputs and outputs

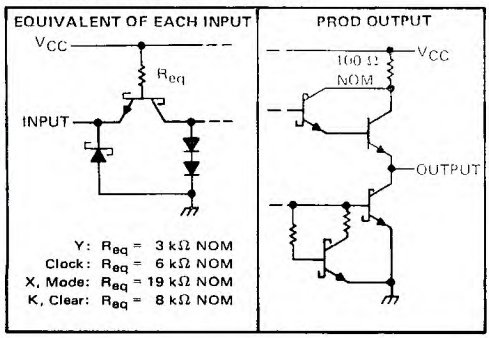

logic symbol†

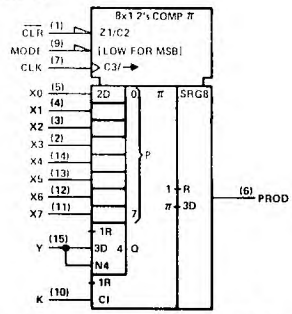

†This symbol is in accordance with ANSI/IEEE Std. 91-1984 and IEC Publication 617-12.
Pin numbers shown are for J and N packages.

logic diagram (positive logic)

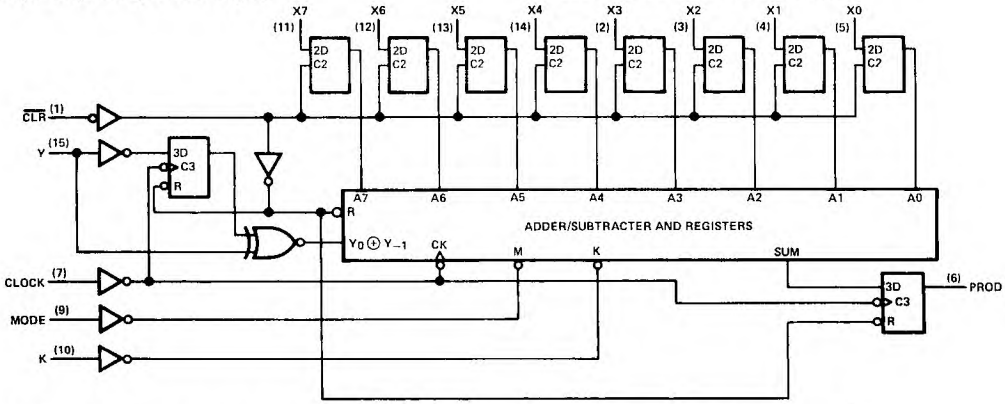

absolute maximum ratings over operating free-air temperature range (unless otherwise noted)

Supply voltage, V_{CC} (see Note 1) . . . . . 7 V
Input voltage (see Note 2) . . . . . 5.5 V
Operating free-air temperature range: SN54LS384 . . . . . −55°C to 125°C
SN74LS384 . . . . . 0°C to 70°C
Storage temperature range . . . . . −65°C to 150°C

NOTES: 1. Voltage values are with respect to network ground terminal.
2. Input voltages must be zero or positive with respect to network ground terminal.

TEXAS INSTRUMENTS
POST OFFICE BOX 655012 • DALLAS, TEXAS 75265

recommended operating conditions

		SN54LS384			SN74LS384			UNIT
		MIN	NOM	MAX	MIN	NOM	MAX	
Supply voltage, V_{CC}		4.5	5	5.5	4.75	5	5.25	V
High-level output current, I_{OH}				−400			−400	μA
Low-level output current, I_{OL}				4			8	mA
Clock frequency, f_{clock}		0		25	0		25	MHz
Setup time, t_{su}	Y before Clock ↑	45			38			ns
	K before Clock ↑	30			24			
	X before Clear ↑	23			19			
Clear inactive-state set up time before Clock ↑		30			20			ns
Hold time, t_h	Y after Clock ↑	0			0			ns
	K after Clock ↑	0			0			
	X after Clear ↑	2			2			
Pulse width, t_w	Clock high	20			20			ns
	Clock low	20			20			
	Clear low	38			33			
Operating free-air temperature, T_A		−55		125	0		70	°C

electrical characteristics over recommended operating free-air temperature range (unless otherwise noted)

PARAMETER			TEST CONDITIONS†			SN54LS384			SN74LS384			UNIT
						MIN	TYP‡	MAX	MIN	TYP‡	MAX	
V_{IH}	High-level input voltage					2			2			V
V_{IL}	Low-level input voltage							0.7			0.8	V
V_{IK}	Input clamp voltage		V_{CC} = MIN,	I_I = −18 mA				−1.5			−1.5	V
V_{OH}	High-level output voltage		V_{CC} = MIN, V_{IL} = V_{IL} max,	V_{IH} = 2 V, V_{OH} = −400 μA		2.5	3.4		2.7	3.4		V
V_{OL}	Low-level output voltage		V_{CC} = MIN, V_{IL} = V_{IL} max	V_{IH} = 2 V,	I_{OL} = 4 mA		0.25	0.4		0.25	0.4	V
					I_{OL} = 8 mA					0.35	0.5	
I_I	Input current at maximum input voltage		V_{CC} = MAX,	V_I = 5.5 V				1			1	mA
I_{IH}	High-level input current	X, Mode	V_{CC} = MAX,	V_I = 2.7 V				20			20	μA
		K, Clear						30			30	
		Clock						40			40	
		Y						80			80	
I_{IL}	Low-level input current	X, Mode	V_{CC} = MAX,	V_I = 0.4 V				−0.48			−0.48	mA
		K, Clear						−1.2			−1.2	
		Clock						−1.6			−1.6	
		Y						−3.2			−3.2	
I_{OS}	Short-circuit output current§		V_{CC} = MAX			−20		−100	−20		−100	mA
I_{CC}	Supply current		V_{CC} = MAX,	See Note 3			91			91		mA

†For conditions shown at MIN or MAX, use the appropriate value specified under recommended operating conditions.
‡All typical values are at V_{CC} = 5 V, T_A = 25°C.
§Not more than one output should be shorted at a time, and duration of the short-circuit should not exceed one second.
NOTE 3: I_{CC} is measured with the clear input grounded and all other inputs and outputs open.

switching characteristics, V_{CC} = 5 V, T_A = 25°C

PARAMETER		TEST CONDITIONS	MIN	TYP	MAX	UNIT
f_{max}	Maximum clock frequency	C_L = 15 pF, R_L = 2 kΩ, See Note 4	25	40		MHz
t_{PLH}	Propagation delay time, low-to-high-level output from clock			15	23	ns
t_{PHL}	Propagation delay time, high-to-low-level output from clock			15	23	ns
t_{PHL}	Propagation delay time, high-to-low-level output from clear			17	25	ns

NOTE 4: Load circuits and voltage waveforms are shown in Section 1.

TYPICAL APPLICATION DATA

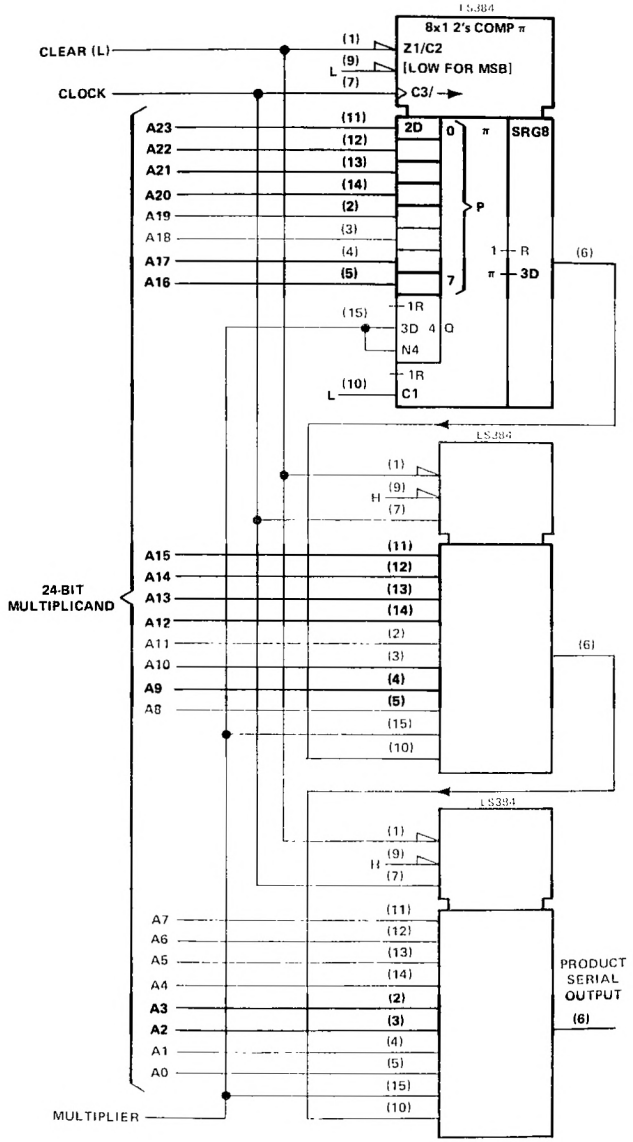

FIGURE 1—BASIC 24-BIT SERIAL/PARALLEL CONNECTION

TEXAS INSTRUMENTS
POST OFFICE BOX 655012 • DALLAS, TEXAS 75265

TYPICAL APPLICATION DATA

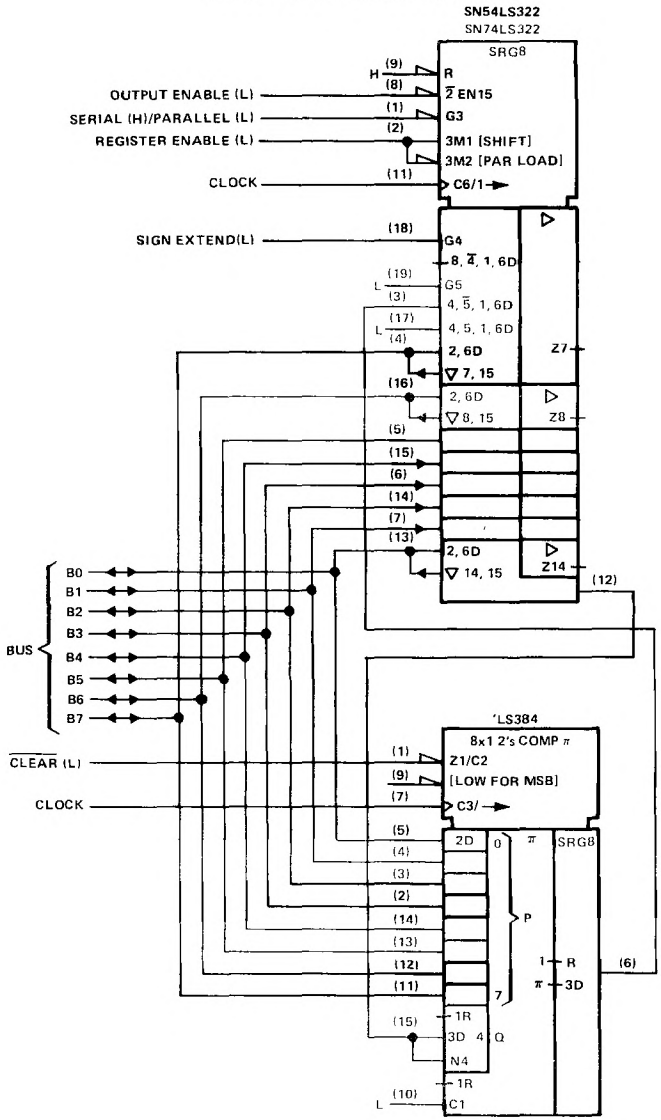

FIGURE 2–8-BIT BY 8-BIT MULTIPLIER, BUS ORGANIZED, WITH 8-BIT TRUNCATED PRODUCT

D2412, NOVEMBER 1977 – REVISED MARCH 1988

- Four Synchronous Elements in a Single 20-Pin Package
- Buffered Clock and Direct Clear Inputs
- Independent Two's-Complement Addition/Subtraction

SN54LS385 . . . J PACKAGE
SN74LS385 . . . DW OR N PACKAGE
(TOP VIEW)

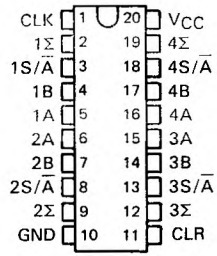

SN54LS385 . . . FK PACKAGE
(TOP VIEW)

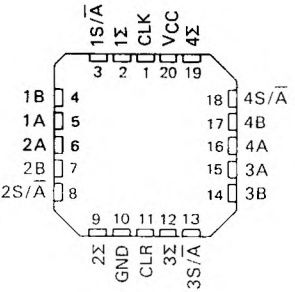

description

The 'LS385 is a general purpose adder/subtractor and is particularly useful as a companion part to the SN54LS384/SN74LS384 serial/parallel two's-complement multiplier. The 'LS385 contains four independent adder/subtractor elements with common clock and clear.

Each of the four independent sum (Σ) outputs reflects its respective A and B input as controlled by the S/$\overline{A}$ control. When S/$\overline{A}$ is high the Σ function is A minus B. When S/$\overline{A}$ is low the Σ function is A plus B.

When low, the clear input asynchronously resets the sum flip-flop low and the carry flip-flop either high in the subtract mode or low in the add mode. The clock is positive-edge triggered and controls the sum and carry flip-flops according to the function table.

FUNCTION TABLE

SELECTED FUNCTION	INPUTS					DATA IN CARRY FLIP-FLOP		ΣOUTPUT
	CLR	S/$\overline{A}$	A	B	CLK	BEFORE ↑	AFTER ↑	AFTER ↑
Clear	L	L	X	X	X	L	L	L
	L	H	X	X	X	H	H	L
Add	H	L	L	L	↑	L	L	L
	H	L	L	L	↑	H	L	H
	H	L	L	H	↑	L	L	H
	H	L	L	H	↑	H	H	L
	H	L	H	L	↑	L	L	H
	H	L	H	L	↑	H	H	L
	H	L	H	H	↑	L	H	L
	H	L	H	H	↑	H	H	H
Subtract	H	H	L	L	↑	L	L	H
	H	H	L	L	↑	H	H	L
	H	H	L	H	↑	L	L	L
	H	H	L	H	↑	H	L	H
	H	H	H	L	↑	L	H	L
	H	H	H	L	↑	H	H	H
	H	H	H	H	↑	L	L	H
	H	H	H	H	↑	H	H	L

H = high level, L = low level, X = irrelevant,
↑ = transition from low to high level at the clock input

PRODUCTION DATA documents contain information current as of publication date. Products conform to specifications per the terms of Texas Instruments standard warranty. Production processing does not necessarily include testing of all parameters.

schematics of inputs and outputs

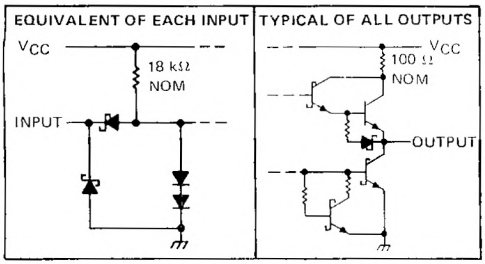

logic symbol†

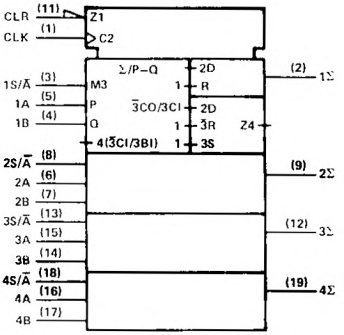

†This symbol is in accordance with ANSI/IEEE Std. 91-1984 and IEC Publication 617-12.

logic diagram (each adder/subtractor, positive logic)

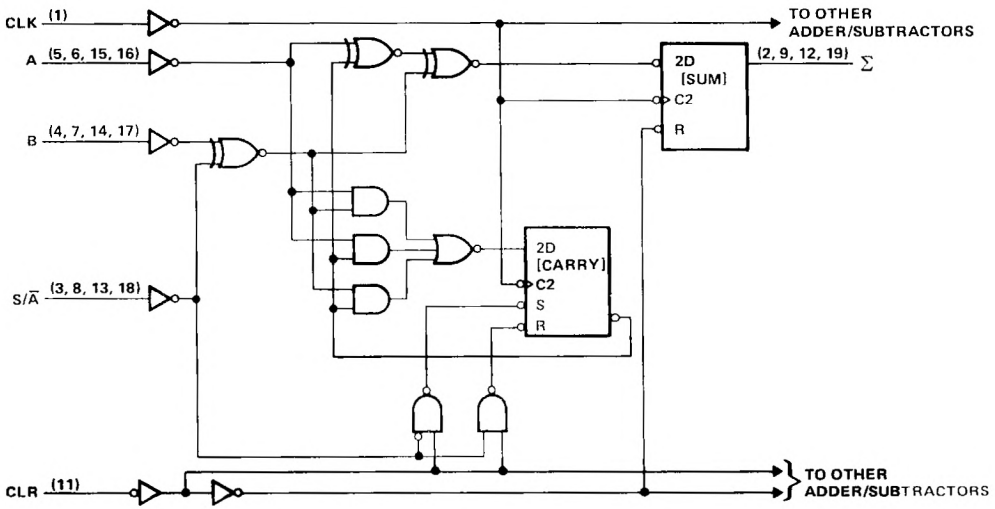

Pin numbers shown are for DW, J, or N packages.

TEXAS INSTRUMENTS
POST OFFICE BOX 655012 • DALLAS, TEXAS 75265

recommended operating conditions

	SN54LS385			SN74LS385			UNIT
	MIN	NOM	MAX	MIN	NOM	MAX	
Supply voltage, V_{CC} (see Note 1)	4.5	5	5.5	4.75	5	5.25	V
High-level output current, I_{OH}			−400			−400	μA
Low-level output current, I_{OL}			4			8	mA
Clock frequency, f_{clock}	0		30	0		30	MHz
Width of clock pulse, t_w	16			16			ns
Setup time, t_{su}	10			10			ns
Hold time, t_h	3			3			ns
Operating free-air temperature, T_A	−55		125	0		70	°C

NOTE 1: Voltage values are with respect to network ground terminal.

electrical characteristics over recommended operating free-air temperature range (unless otherwise noted)

PARAMETER		TEST CONDITIONS†		SN54LS385			SN74LS385			UNIT
				MIN	TYP‡	MAX	MIN	TYP‡	MAX	
V_{IH}	High-level input voltage			2			2			V
V_{IL}	Low-level input voltage					0.7			0.8	V
V_{IK}	Input clamp voltage	V_{CC} = MIN,	I_I = −18 mA			−1.5			−1.5	V
V_{OH}	High-level output voltage	V_{CC} = MIN, V_{IL} = V_{IL}max,	V_{IH} = 2 V, I_{OH} = −400 μA	2.5	3.5		2.7	3.5		V
V_{OL}	Low-level output voltage	V_{CC} = MIN, V_{IL} = V_{IL}max	V_{IH} = 2 V, I_{OL} = 4 mA		0.25	0.4		0.25	0.4	V
			I_{OL} = 8 mA					0.35	0.5	
I_I	Input current at maximum input voltage	V_{CC} = MAX,	V_I = 7 V			0.1			0.1	mA
I_{IH}	High-level input current	V_{CC} = MAX,	V_I = 2.7 V			20			20	μA
I_{IL}	Low-level input current	V_{CC} = MAX,	V_I = 0.4 V			−0.4			−0.4	mA
I_{OS}	Short-circuit output current§	V_{CC} = MAX		−20		−100	−20		−100	mA
I_{CC}	Supply current	V_{CC} = MAX,	See Note 2		48	75		48	75	mA

† For conditions shown as MIN or MAX, use the appropriate value specified under recommended operating conditions.
‡ All typical values are at V_{CC} = 5 V, T_A = 25°C.
§ Not more than one output should be shorted at a time.
NOTE 2: I_{CC} is measured with all inputs grounded and all outputs open.

switching characteristics, V_{CC} = 5 V, T_A = 25°C

PARAMETER	FROM (INPUT)	TO (OUTPUT)	TEST CONDITIONS	MIN	TYP	MAX	UNIT
f_{max}			C_L = 15 pF, R_L = 2 kΩ, See Note 3	30	40		MHz
t_{PLH}	Clock	Σ			14	22	ns
t_{PHL}					18	27	
t_{PHL}	Clear	Σ			18	30	ns

NOTE 3: Load circuits and voltage waveforms are shown in Section 1.

MARCH 1974 – REVISED MARCH 1988

- Electrically Identical to SN54LS86A/SN74LS86A
- Mechanically Identical to SN54L86/SN74L86
- Total Average Propagation Delay Times . . . 10 ns
- Typical Total Power Dissipation . . . 30.5 mW

FUNCTION TABLE
(EACH GATE)

INPUTS		OUTPUT
A	B	
L	L	L
L	H	H
H	L	H
H	H	L

H = high level
L = low level

SN54LS386A . . . J OR W PACKAGE
SN74LS386A . . . D OR N PACKAGE
(TOP VIEW)

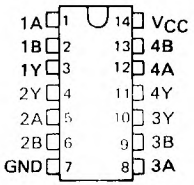

SN54LS386A . . . FK PACKAGE
(TOP VIEW)

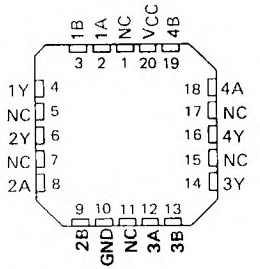

NC – No internal connection

logic symbol†

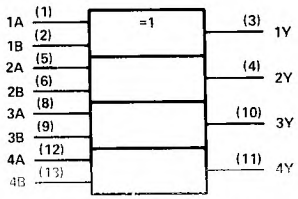

†This symbol is in accordance with ANSI/IEEE Std. 91-1984 and IEC Publication 617-12.
Pin numbers shown are for D, J, N, and W packages.

logic diagram (each gate)

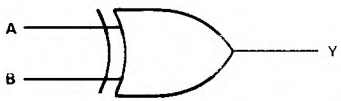

positive logic

$$Y = A \oplus B = \overline{A}B + A\overline{B}$$

schematics of inputs and outputs

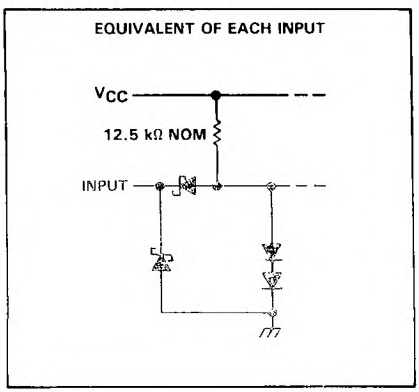

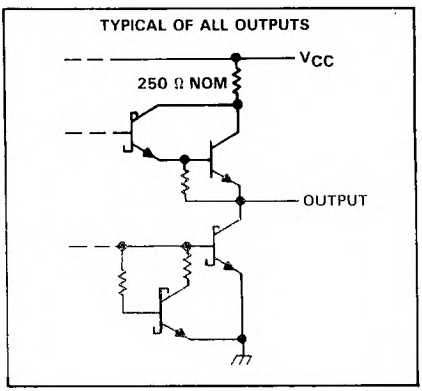

PRODUCTION DATA documents contain information current as of publication date. Products conform to specifications per the terms of Texas Instruments standard warranty. Production processing does not necessarily include testing of all parameters.

absolute maximum ratings over operating free-air temperature range (unless otherwise noted)

Supply voltage, V_{CC} (see Note 1) . . . . . 7 V
Input voltage . . . . . 7 V
Operating free-air temperature range: SN54LS386A . . . . . −55°C to 125°C
SN74LS386A . . . . . 0°C to 70°C
Storage temperature range . . . . . −65°C to 150°C

NOTE 1: Voltage values are with respect to network ground terminal.

recommended operating conditions

	SN54LS386A			SN74LS386A			UNIT
	MIN	NOM	MAX	MIN	NOM	MAX	
Supply voltage, V_{CC}	4.5	5	5.5	4.75	5	5.25	V
High-level output current, I_{OH}			−400			−400	μA
Low-level output current, I_{OL}			4			8	mA
Operating free-air temperature, T_A	−55		125	0		70	°C

2 TTL Devices

electrical characteristics over recommended operating free-air temperature range (unless otherwise noted)

PARAMETER		TEST CONDITIONS†		SN54LS386A			SN74LS386A			UNIT
				MIN	TYP‡	MAX	MIN	TYP‡	MAX	
V_{IH}	High-level input voltage			2			2			V
V_{IL}	Low-level input voltage					0.7			0.8	V
V_{IK}	Input clamp voltage	V_{CC} = MIN,	I_I = −18 mA			−1.5			−1.5	V
V_{OH}	High-level output voltage	V_{CC} = MIN, V_{IL} = V_{IL} max,	V_{IH} = 2 V, I_{OH} = −400 μA	2.5	3.4		2.7	3.4		V
V_{OL}	Low-level output voltage	V_{CC} = MIN, V_{IH} = 2 V, V_{IL} = V_{IL} max	I_{OL} = 4 mA		0.25	0.4		0.25	0.4	V
			I_{OL} = 8 mA					0.35	0.5	
I_I	Input current at maximum input voltage	V_{CC} = MAX,	V_I = 7 V			0.2			0.2	mA
I_{IH}	High-level input current	V_{CC} = MAX,	V_I = 2.7 V			40			40	μA
I_{IL}	Low-level input current	V_{CC} = MAX,	V_I = 0.4 V			−0.8			−0.8	mA
I_{OS}	Short-circuit output current§	V_{CC} = MAX		−20		−100	−20		−100	mA
I_{CC}	Supply current	V_{CC} = MAX,	See Note 2		6.1	10		6.1	10	mA

†For conditions shown as MIN or MAX, use the appropriate value specified under recommended operating conditions.
‡All typical values are at V_{CC} = 5 V, T_A = 25°C.
§Not more than one output should be shorted at a time.
NOTE 2: I_{CC} is measured with the inputs grounded and the outputs open.

switching characteristics, V_{CC} = 5 V, T_A = 25°C

PARAMETER	FROM (INPUT)	TEST CONDITIONS		MIN	TYP	MAX	UNIT
t_{PLH}	A or B	Other input low	C_L = 15 pF, R_L = 2 kΩ, See Note 3		12	23	ns
t_{PHL}					10	17	
t_{PLH}	A or B	Other input high			20	30	ns
t_{PHL}					13	22	

NOTE 3: Load circuits and voltage waveforms are shown in Section 1.

TEXAS INSTRUMENTS
POST OFFICE BOX 655012 • DALLAS, TEXAS 75265

- Dual Versions of the Popular '90A, 'LS90 and '93A, 'LS93
- '390, 'LS390 . . . Individual Clocks for A and B Flip-Flops Provide Dual ÷ 2 and ÷ 5 Counters
- '393, 'LS393 . . . Dual 4-Bit Binary Counter with Individual Clocks
- All Have Direct Clear for Each 4-Bit Counter
- Dual 4-Bit Versions Can Significantly Improve System Densities by Reducing Counter Package Count by 50%
- Typical Maximum Count Frequency . . . 35 MHz
- Buffered Outputs Reduce Possibility of Collector Commutation

SN54390, SN54LS390 . . . J OR W PACKAGE
SN74390 . . . N PACKAGE
SN74LS390 . . . D OR N PACKAGE
(TOP VIEW)

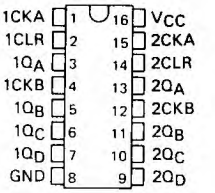

SN54LS390 . . . FK PACKAGE
(TOP VIEW)

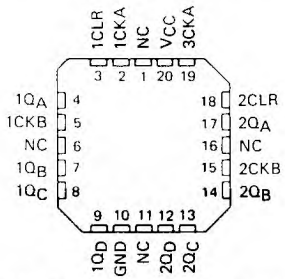

SN54393, SN54LS393 . . . J OR W PACKAGE
SN74393 . . . N PACKAGE
SN74LS393 . . . D OR N PACKAGE
(TOP VIEW)

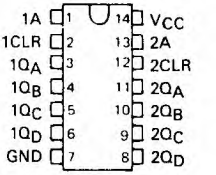

SN54LS393 . . . FK PACKAGE
(TOP VIEW)

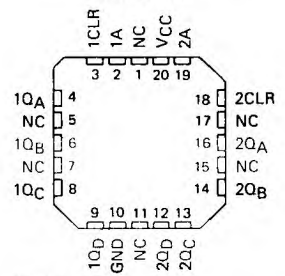

NC - No internal connection

description

Each of these monolithic circuits contains eight master-slave flip-flops and additional gating to implement two individual four-bit counters in a single package. The '390 and 'LS390 incorporate dual divide-by-two and divide-by-five counters, which can be used to implement cycle lengths equal to any whole and/or cumulative multiples of 2 and/or 5 up to divide-by-100. When connected as a bi-quinary counter, the separate divide-by-two circuit can be used to provide symmetry (a square wave) at the final output stage. The '393 and 'LS393 each comprise two independent four-bit binary counters each having a clear and a clock input. N-bit binary counters can be implemented with each package providing the capability of divide-by-256. The '390, 'LS390, '393, and 'LS393 have parallel outputs from each counter stage so that any submultiple of the input count frequency is available for system-timing signals.

Series 54 and Series 54LS circuits are characterized for operation over the full military temperature range of −55°C to 125°C; Series 74 and Series 74LS circuits are characterized for operation from 0°C to 70°C.

PRODUCTION DATA documents contain information current as of publication date. Products conform to specifications per the terms of Texas Instruments standard warranty. Production processing does not necessarily include testing of all parameters.

FUNCTION TABLES

'390, 'LS390
BCD COUNT SEQUENCE
(EACH COUNTER)
(See Note A)

COUNT	OUTPUT			
	Q_D	Q_C	Q_B	Q_A
0	L	L	L	L
1	L	L	L	H
2	L	L	H	L
3	L	L	H	H
4	L	H	L	L
5	L	H	L	H
6	L	H	H	L
7	L	H	H	H
8	**H**	**L**	**L**	**L**
9	**H**	**L**	**L**	**H**

'390, 'LS390
BI-QUINARY (5-2)
(EACH COUNTER)
(See Note B)

COUNT	OUTPUT			
	Q_A	Q_D	Q_C	Q_B
0	L	L	L	L
1	L	L	L	H
2	L	L	H	L
3	L	L	H	H
4	L	H	L	L
5	H	L	L	L
6	H	L	L	H
7	H	L	H	L
8	**H**	**L**	**H**	**H**
9	**H**	**H**	**L**	**L**

'393, 'LS393
COUNT SEQUENCE
(EACH COUNTER)

COUNT	OUTPUT			
	Q_D	Q_C	Q_B	Q_A
0	L	L	L	L
1	L	L	L	H
2	L	L	H	L
3	L	L	H	H
4	L	H	L	L
5	L	H	L	H
6	L	H	H	L
7	L	H	H	H
8	H	L	L	L
9	**H**	**L**	**L**	**H**
10	**H**	**L**	**H**	**L**
11	**H**	**L**	**H**	**H**
12	**H**	**H**	**L**	**L**
13	**H**	**H**	**L**	**H**
14	H	H	H	L
15	H	H	H	H

NOTES: A. Output Q_A is connected to input B for BCD count.
B. Output Q_D is connected to input A for bi-quinary count.
C. H = high level, L = low level.

logic diagrams (positive logic)

'390, 'LS390

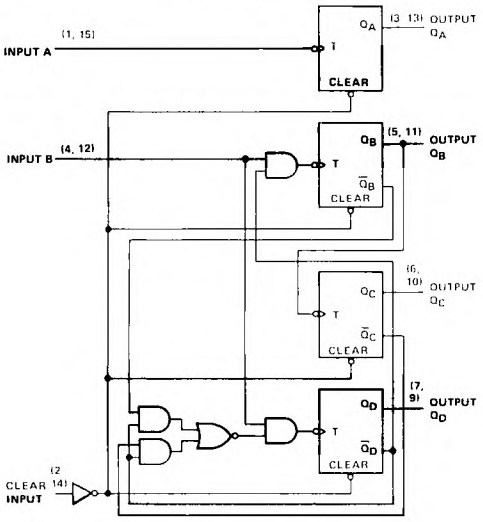

logic symbols†

'390, 'LS390

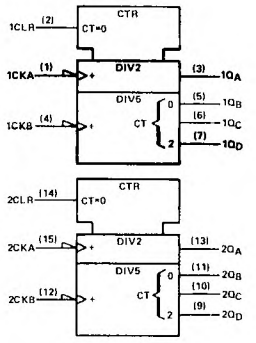

'393, 'LS393

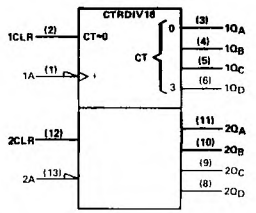

†These symbols are in accordance with ANSI/IEEE Std. 91-1984 and IEC Publication 617-12

Pin numbers shown are for D, J, N, and W packages.

TEXAS INSTRUMENTS
POST OFFICE BOX 655012 • DALLAS, TEXAS 75265

logic diagrams (continued)

'393, 'LS393

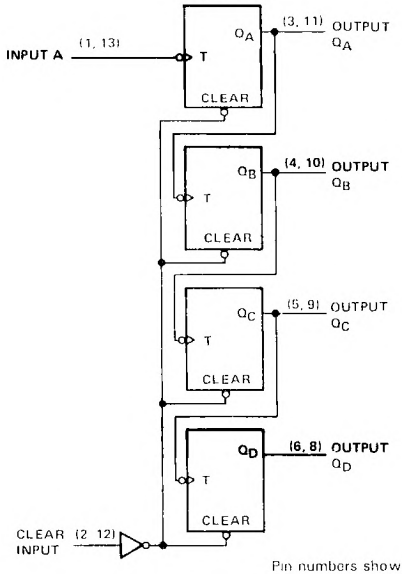

Pin numbers shown are for D, J, N and W packages.

schematics of inputs and outputs

'390, '393

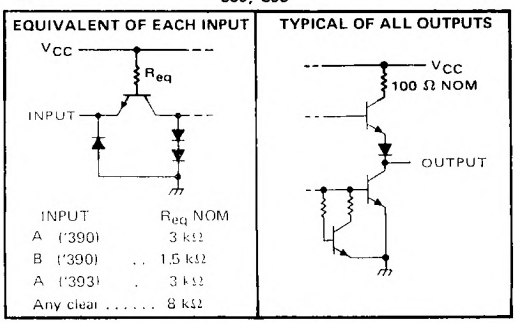

INPUT	R_{eq} NOM
A ('390)	3 kΩ
B ('390)	1.5 kΩ
A ('393)	3 kΩ
Any clear	8 kΩ

'LS390, 'LS393

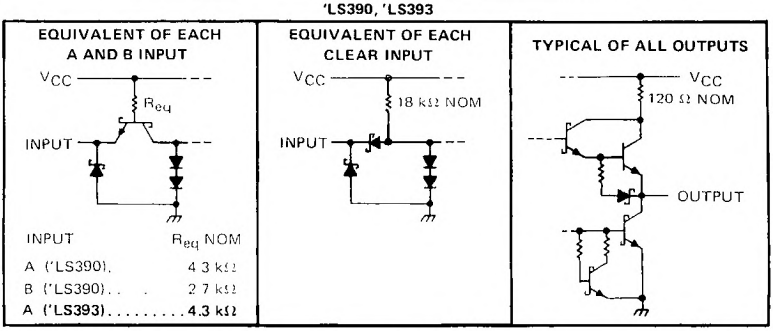

INPUT	R_{eq} NOM
A ('LS390)	4.3 kΩ
B ('LS390)	2.7 kΩ
A ('LS393)	4.3 kΩ

absolute maximum ratings over operating free-air temperature range (unless otherwise noted)

Supply voltage, V_{CC} (see Note 1) . . . . . 7 V
Input voltage . . . . . 5.5 V
Operating free-air temperature range: SN54390, SN54393 . . . . . −55°C to 125°C
SN74390, SN74393 . . . . . 0°C to 70°C
Storage temperature range . . . . . −65°C to 150°C

NOTE 1: Voltage values are with respect to network ground terminal.

recommended operating conditions

		SN54390 SN54393			SN74390 SN74393			UNIT
		MIN	NOM	MAX	MIN	NOM	MAX	
Supply voltage, V_{CC}		4.5	5	5.5	4.75	5	5.25	V
High-level output current, I_{OH}				−400			−400	μA
Low-level output current, I_{OL}				16			16	mA
Count frequency, f_{count}	A input	0		25	0		25	MHz
	B input	0		20	0		20	
Pulse width, t_w	A input high or low	20			20			ns
	B input high or low	25			25			
	Clear high	20			20			
Clear inactive-state setup time, t_{su}		25↓			25↓			ns
Operating free-air temperature, T_A		−55		125	0		70	°C

↓ The arrow indicates that the falling edge of the clock pulse is used for reference.

electrical characteristics over recommended operating free-air temperature range (unless otherwise noted)

PARAMETER			TEST CONDITIONS†		'390 MIN	'390 TYP‡	'390 MAX	'393 MIN	'393 TYP‡	'393 MAX	UNIT
V_{IH}	High-level input voltage				2			2			V
V_{IL}	Low-level input voltage						0.8			0.8	V
V_{IK}	Input clamp voltage		V_{CC} = MIN, I_I = −12 mA				−1.5			−1.5	V
V_{OH}	High-level output voltage		V_{CC} = MIN, V_{IH} = 2 V, V_{IL} = 0.8 V, I_{OH} = −800 μA		2.4	3.4		2.4	3.4		V
V_{OL}	Low-level output voltage		V_{CC} = MIN, V_{IH} = 2 V, V_{IL} = 0.8 V, I_{OL} = 16 mA¶			0.2	0.4		0.2	0.4	V
I_I	Input current at maximum input voltage		V_{CC} = MAX, V_I = 5.5 V				1			1	mA
I_{IH}	High-level input current	Clear	V_{CC} = MAX, V_I = 2.4 V				40			40	μA
		Input A					80			80	
		Input B					120				
I_{IL}	Low-level input current	Clear	V_{CC} = MAX, V_I = 0.4 V				−1			−1	mA
		Input A					−3.2			−3.2	
		Input B					−4.8				
I_{OS}	Short-circuit output current§		V_{CC} = MAX	SN54'	−20		−57	−20		−57	mA
				SN74'	−18		−57	−18		−57	
I_{CC}	Supply current		V_{CC} = MAX, See Note 2			42	69		38	64	mA

† For conditions shown as MIN or MAX, use the appropriate value specified under recommended operating conditions.
‡ All typical values are at V_{CC} = 5 V, T_A = 25°C.
§ Not more than one output should be shorted at a time.
¶ The Q_A outputs of the '390 are tested at I_{OL} = 16 mA plus the limit value for I_{IL} for the B input. This permits driving the B input while maintaining full fan-out capability.
NOTE 2: I_{CC} is measured with all outputs open, both clear inputs grounded following momentary connection to 4.5 V, and all other inputs grounded.

TEXAS INSTRUMENTS
POST OFFICE BOX 655012 • DALLAS, TEXAS 75265

switching characteristics, V_{CC} = 5 V, T_A = 25°C

PARAMETER	FROM (INPUT)	TO (OUTPUT)	TEST CONDITIONS	'390			'393			UNIT
				MIN	TYP	MAX	MIN	TYP	MAX	
f_{max}	A	Q_A	C_L = 15 pF, R_L = 400 Ω, See Note 3 and Figure 1	25	35		25	35		MHz
	B	Q_B		20	30					
t_{PLH}	A	Q_A			12	20		12	20	ns
t_{PHL}					13	20		13	20	
t_{PLH}	A	Q_C of '390 Q_D of '393			37	60		40	60	ns
t_{PHL}					39	60		40	60	
t_{PLH}	B	Q_B			13	21				ns
t_{PHL}					14	21				
t_{PLH}	B	Q_C			24	39				ns
t_{PHL}					26	39				
t_{PLH}	B	Q_D			13	21				ns
t_{PHL}					14	21				
t_{PHL}	Clear	Any			24	39		24	39	ns

NOTE 3: Load circuits and voltage waveforms are shown in Section 1.

PARAMETER MEASUREMENT INFORMATION

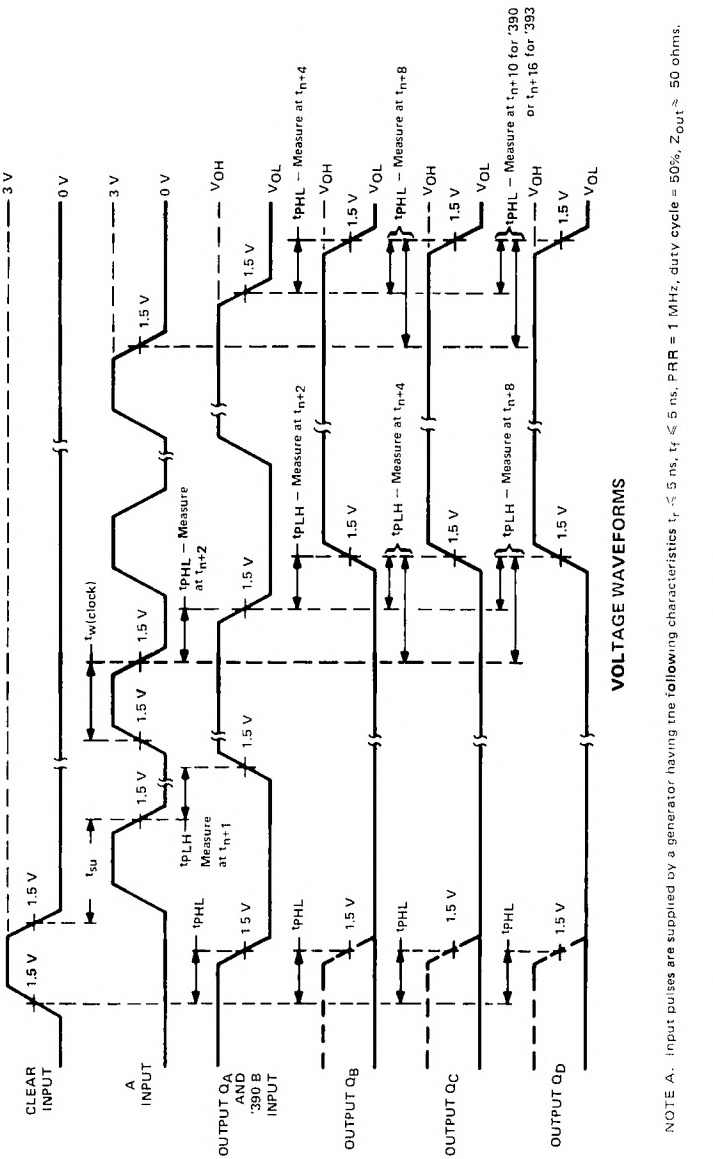

NOTE A: Input pulses are supplied by a generator having the following characteristics $t_r \leq 5$ ns, $t_f \leq 5$ ns, PRR = 1 MHz, duty cycle = 50%, $Z_{out} \approx$ 50 ohms.

FIGURE 1

absolute maximum ratings over operating free-air temperature range (unless otherwise noted)

Supply voltage, V_{CC} (see Note 1) . . . . . 7 V
Clear input voltage . . . . . 7 V
Any A or B clock input voltage . . . . . 5.5 V
Operating free-air temperature range: SN54LS390, SN54LS393 . . . . . −55°C to 125°C
SN74LS390, SN74LS393 . . . . . 0°C to 70°C
Storage temperature range . . . . . −65°C to 150°C

NOTE 1: Voltage values are with respect to network ground terminal.

recommended operating conditions

		SN54LS390 SN54LS393			SN74LS390 SN74LS393			UNIT
		MIN	NOM	MAX	MIN	NOM	MAX	
Supply voltage, V_{CC}		4.5	5	5.5	4.75	5	5.25	V
High-level output current, I_{OH}				−400			−400	μA
Low-level output current, I_{OL}				4			8	mA
Count frequency, f_{count}	A input	0		25	0		25	MHz
	B input	0		12.5	0		12.5	
Pulse width, t_w	A input high or low	20			20			ns
	B input high or low	40			40			
	Clear high	20			20			
Clear inactive-state setup time, t_{su}		25↓			25↓			ns
Operating free-air temperature, T_A		−55		125	0		70	°C

↓ The arrow indicates that the falling edge of the clock pulse is used for reference.

electrical characteristics over recommended operating free-air temperature range (unless otherwise noted)

PARAMETER			TEST CONDITIONS†		SN54LS'			SN74LS'			UNIT
					MIN	TYP‡	MAX	MIN	TYP‡	MAX	
V_{IH}	High-level input voltage				2			2			V
V_{IL}	Low-level input voltage						0.7			0.8	V
V_{IK}	Input clamp voltage		V_{CC} = MIN, I_I = −18 mA				−1.5			−1.5	V
V_{OH}	High-level output voltage		V_{CC} = MIN, V_{IH} = 2 V, V_{IL} = V_{IL}max, I_{OH} = −400 μA		2.5	3.4		2.7	3.4		V
V_{OL}	Low-level output voltage		V_{CC} = MIN, V_{IH} = 2 V, V_{IL} = 0.8 V,	I_{OL} = 4 mA¶		0.25	0.4		0.25	0.4	V
				I_{OL} = 8 mA¶					0.35	0.5	
I_I	Input current at maximum input voltage	Clear	V_{CC} = MAX	V_I = 7 V			0.1			0.1	mA
		Input A		V_I = 5.5 V			0.2			0.2	
		Input B					0.4			0.4	
I_{IH}	High-level input current	Clear	V_{CC} = MAX, V_I = 2.7 V				0.02			0.02	mA
		Input A					0.1			0.1	
		Input B					0.2			0.2	
I_{IL}	Low-level input current	Clear	V_{CC} = MAX, V_I = 0.4 V				−0.4			−0.4	mA
		Input A					−1.6			−1.6	
		Input B					−2.4			−2.4	
I_{OS}	Short-circuit output current§		V_{CC} = MAX		−20		−100	−20		−100	mA
I_{CC}	Supply current		V_{CC} = MAX, See Note 2	'LS390		15	26		15	26	mA
				'LS393		15	26		15	26	

† For conditions shown as MIN or MAX, use the appropriate value specified under recommended operating conditions.
‡ All typical values are at V_{CC} = 5 V, T_A = 25°C.
§ Not more than one output should be shorted at a time, and duration of the short-circuit should not exceed one second.
¶ The Q_A outputs of the 'LS390 are tested at I_{OL} = MAX plus the limit value for I_{IL} for the clock B input. This permits driving the clock B input while maintaining full fan-out capability.

NOTE 2: I_{CC} is measured with all outputs open, both clear inputs grounded following momentary connection to 4.5 V, and all other inputs grounded.

switching characteristics, V_{CC} = 5 V, T_A = 25°C

PARAMETER	FROM (INPUT)	TO (OUTPUT)	TEST CONDITIONS	'LS390			'LS393			UNIT
				MIN	TYP	MAX	MIN	TYP	MAX	
f_{max}	A	Q_A	C_L = 15 pF, R_L = 2 kΩ, See Note 4 and Figure 2	25	35		25	35		MHz
	B	Q_B		12.5	20					
t_{PLH}	A	Q_A			12	20		12	20	ns
t_{PHL}					13	20		13	20	
t_{PLH}	A	Q_C of 'LS390 Q_D of 'LS393			37	60		40	60	ns
t_{PHL}					39	60		40	60	
t_{PLH}	B	Q_B			13	21				ns
t_{PHL}					14	21				
t_{PLH}	B	Q_C			24	39				ns
t_{PHL}					26	39				
t_{PLH}	B	Q_D			13	21				ns
t_{PHL}					14	21				
t_{PHL}	Clear	Any			24	39		24	39	ns

NOTE 4: Load circuits and voltage waveforms are shown in Section 1.

TEXAS INSTRUMENTS
POST OFFICE BOX 655012 • DALLAS, TEXAS 75265

PARAMETER MEASUREMENT INFORMATION

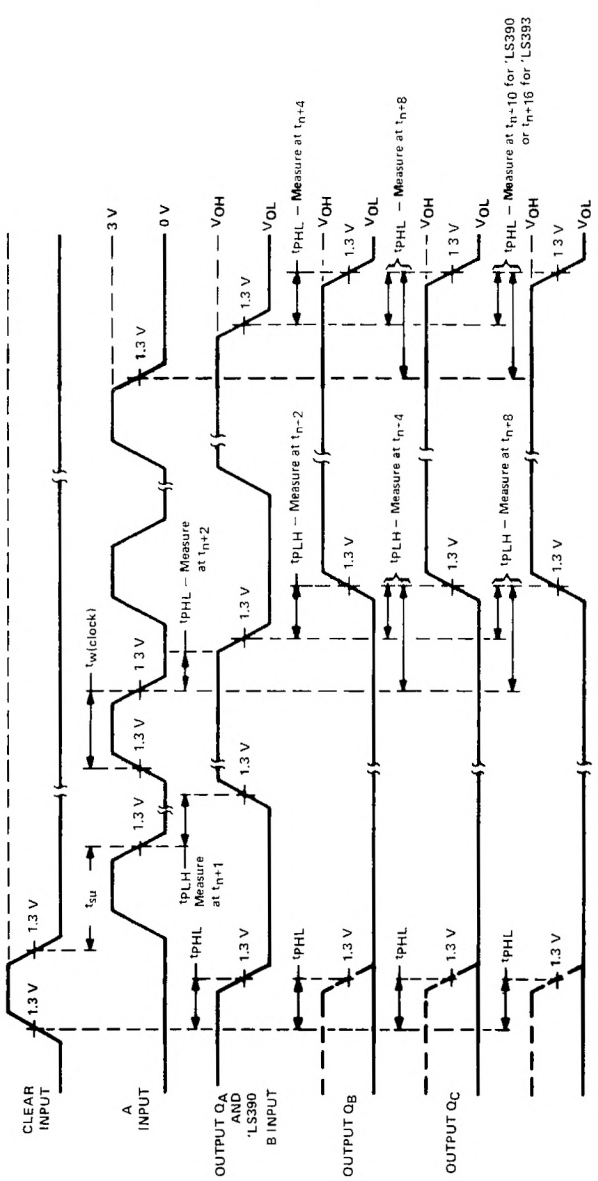

NOTE A: Input pulses are supplied by a generator having the following characteristics $t_r \leq 15$ ns, $t_f \leq$ **6 ns**, PRR = 1 MHz, duty cycle = 50 %, $Z_{out} \approx 50$ ohms

FIGURE 2

OCTOBER 1976 – REVISED MARCH 1988

- **Three-State, 4 Bit, Cascadable, Parallel-In, Parallel-Out Registers**
- **'LS395A Offers Three Times the Sink-Current Capability of 'LS395**
- **Low Power Dissipation . . . 75 mW Typical (Enabled)**
- **Applications:**
  N-Bit Serial-To-Parallel Converter
  N-Bit Parallel-To-Serial Converter
  N-Bit Storage Register

SN54LS395A . . . J OR W PACKAGE
SN74LS395A . . . D OR N PACKAGE
(TOP VIEW)

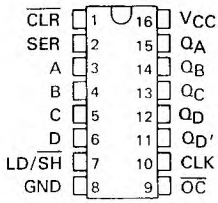

SN54LS395A . . . FK PACKAGE
(TOP VIEW)

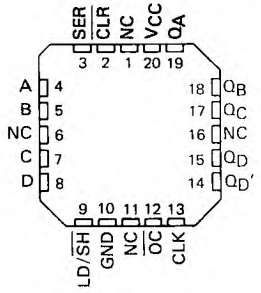

NC – No internal connection

description

These 4-bit registers feature parallel inputs, parallel outputs, and clock (CLK), serial (SER), load shift (LD/$\overline{SH}$), output control ($\overline{OC}$) and direct overriding clear ($\overline{CLR}$) inputs.

Shifting is accomplished when the load/shift control is low. Parallel loading is accomplished by applying the four bits of data and taking the load/shift control input high. The data is loaded into the associated flip-flops and appears at the outputs after the high-to-low transition of the clock input. During parallel loading, the entry of serial data is inhibited.

When the output control is low, the normal logic levels of the four outputs are available for driving the loads or bus lines. The outputs are disabled independently from the level of the clock by a high logic level at the output control input. The outputs then present a high impedance and neither load nor drive the bus line; however, sequential operation of the registers is not affected. During the high-impedance mode, the output at Q_D' is still available for cascading.

logic symbol†

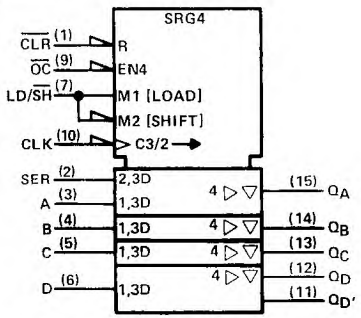

†This symbol is in accordance with ANSI/IEEE Std. 91-1984 and IEC Publication 617-12.
Pin numbers shown are for D, J, N, and W packages.

PRODUCTION DATA documents contain information current as of publication date. Products conform to specifications per the terms of Texas Instruments standard warranty. Production processing does not necessarily include testing of all parameters.

logic diagram (positive logic)

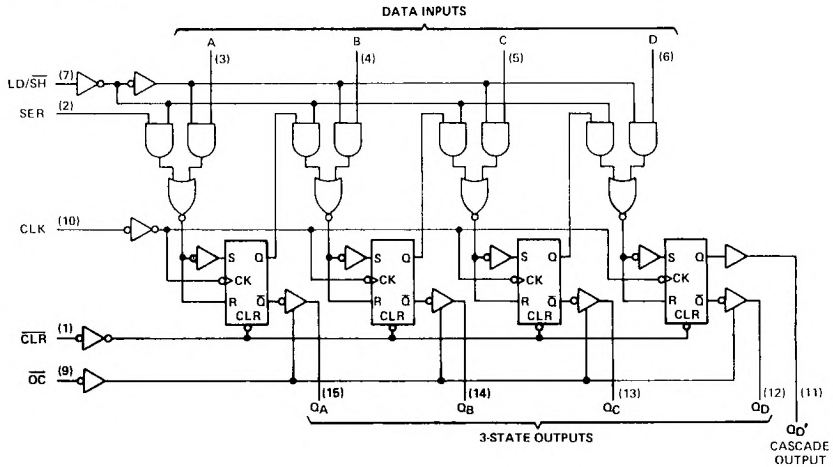

Pin numbers shown are for D, J, N, and W packages.

schematics of inputs and outputs

EQUIVALENT OF SERIAL AND DATA INPUTS	EQUIVALENT OF OTHER INPUTS	TYPICAL OF Q_A, Q_B, Q_C, Q_D OUTPUTS	TYPICAL OF Q_D' OUTPUTS
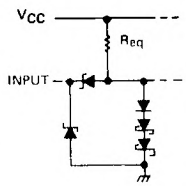	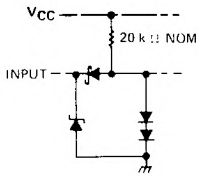	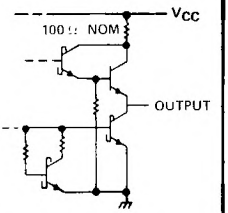	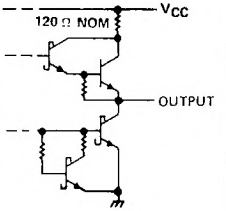
Serial: R_{eq} = 30 kΩ NOM A, B, C, D: R_{eq} = 20 kΩ NOM			

TEXAS INSTRUMENTS
POST OFFICE BOX 655012 • DALLAS, TEXAS 75265

FUNCTION TABLE

INPUTS								3-STATE OUTPUTS				CASCADE OUTPUT
$\overline{CLR}$	LD/$\overline{SH}$	CLK	SER	PARALLEL A	B	C	D	Q_A	Q_B	Q_C	Q_D	Q_D'
L	X	X	X	X	X	X	X	L	L	L	L	L
H	H	H	X	X	X	X	X	Q_{A0}	Q_{B0}	Q_{C0}	Q_{D0}	Q_{D0}
H	H	↓	X	a	b	c	d	a	b	c	d	d
H	L	H	X	X	X	X	X	Q_{A0}	Q_{B0}	Q_{C0}	Q_{D0}	Q_{D0}
H	L	↓	H	X	X	X	X	H	Q_{An}	Q_{Bn}	Q_{Cn}	Q_{Cn}
H	L	↓	L	X	X	X	X	L	Q_{An}	Q_{Bn}	Q_{Cn}	Q_{Cn}

When the output control is high, the 3-state outputs are disabled to the high-impedance state; however, sequential operation of the registers and the output at Q_D' are not affected.

absolute maximum ratings over operating free-air temperature range (unless otherwise noted)

Supply voltage, V_{CC} (see Note 1) . . . . . 7 V
Input voltage . . . . . 7 V
Operating free-air temperature range: SN54LS395A . . . . . −55°C to 125°C
SN74LS395A . . . . . 0°C to 70°C
Storage temperature range . . . . . −65°C to 150°C

NOTE 1: Voltage values are with respect to network ground terminal.

recommended operating conditions

		SN54LS395A			SN74LS395A			UNIT
		MIN	NOM	MAX	MIN	NOM	MAX	
Supply voltage, V_{CC}		4.5	5	5.5	4.75	5	5.25	V
High-level output current, I_{OH}	Q_A, Q_B, Q_C, Q_D			−1			−2.6	mA
	Q_D'			−400			−400	μA
Low-level output current, I_{OL}	Q_A, Q_B, Q_C, Q_D			12			24	mA
	Q_D'			4			8	mA
Clock frequency, f_{clock}		0		30	0		30	MHz
Width of clock pulse, $t_{w(clock)}$		16			16			ns
Setup time, high-level or low-level data, t_{su}	LD/$\overline{SH}$	40			40			ns
	All other inputs	20			20			
Hold time, high-level or low-level data, t_h		10			10			ns
Operating free-air temperature, T_A		−55		125	0		70	°C

electrical characteristics over recommended operating free-air temperature range (unless otherwise noted)

PARAMETER		TEST CONDITIONS†			SN54LS395A			SN74LS395A			UNIT
					MIN	TYP‡	MAX	MIN	TYP‡	MAX	
V_{IH}	High-level input voltage				2			2			V
V_{IL}	Low-level input voltage						0.7			0.8	V
V_{IK}	Input clamp voltage	V_{CC} = MIN,	I_I = −18 mA				−1.5			−1.5	V
V_{OH}	High-level output voltage	V_{CC} = MIN, V_{IL} = V_{IL} max,	V_{IH} = 2 V, I_{OH} = MAX	Q_A, Q_B, Q_C, Q_D	2.4	3.4		2.4	3.1		V
				Q_D'	2.5	3.4		2.7	3.4		V
V_{OL}	Low-level output voltage	V_{CC} = MIN, V_{IL} = V_{IL} max, V_{IH} = 2 V	Q_A, Q_B, Q_C, Q_D	I_{OL} = 12 mA		0.25	0.4		0.25	0.4	V
				I_{OL} = 24 mA					0.35	0.5	
			Q_D'	I_{OL} = 4 mA		0.25	0.4		0.25	0.4	V
				I_{OL} = 8 mA					0.35	0.5	
I_{OZH}	Off-state output current, high-level voltage applied	V_{CC} = MAX, V_O = 2.7 V	V_{IH} = 2 V,	Q_A, Q_B, Q_C, Q_D			20			20	μA
I_{OZL}	Off-state output current, low-level voltage applied	V_{CC} = MAX, V_O = 0.4 V	V_{IH} = 2 V,	Q_A, Q_B, Q_C, Q_D			−20			−20	μA
I_I	Input current at maximum input voltage	V_{CC} = MAX,	V_I = 7 V				0.1			0.1	mA
I_{IH}	High-level input current	V_{CC} = MAX,	V_I = 2.7 V				20			20	μA
I_{IL}	Low-level input current	V_{CC} = MAX,	V_I = 0.4 V				−0.4			−0.4	mA
I_{OS}	Short-circuit output current§	V_{CC} = MAX		Q_A, Q_B, Q_C, Q_D	−30		−130	−30		−130	mA
				Q_D'	−20		−100	−20		−100	mA
I_{CC}	Supply current	V_{CC} = MAX,	See Note 2	Condition A		22	34		22	34	mA
				Condition B		21	31		21	31	

†For conditions shown as MIN or MAX, use the appropriate value specified under recommended operating conditions.
‡All typical values are at V_{CC} = 5 V, T_A = 25°C.
§Not more than one output should be shorted at a time,and duration of the short-circuit should not exceed one second.
NOTE 2: I_{CC} is measured with the outputs open, the serial input and mode control at 4.5 V, and the data inputs grounded under the following conditions:
A. Output control at 4.5 V and a momentary 3 V, then ground, applied to clock input.
B. Output control and clock input grounded.

switching characteristics, V_{CC} = 5 V, T_A = 25°C

PARAMETER		TEST CONDITIONS	MIN	TYP	MAX	UNIT
f_{max}	Maximum clock frequency	See Note 3, Q_A, Q_B, Q_C, Q_D outputs: R_L = 667 Ω, C_L = 45 pF Q_D' output: R_L = 2 kΩ, C_L = 15 pF	30	45		MHz
t_{PHL}	Propagation delay time, high-to-low-level output from clear			22	35	ns
t_{PLH}	Propagation delay time, low-to-high-level output			15	30	ns
t_{PHL}	Propagation delay time, high-to-low-level output			20	30	ns
t_{PZH}	Output enable time to high level			15	25	ns
t_{PZL}	Output enable time to low level			17	25	ns
t_{PHZ}	Output disable time from high level	C_L = 5 pF, See Note 3		11	17	ns
t_{PLZ}	Output disable time from low level			12	20	ns

NOTE 3: Load circuits and voltage waveforms are shown in Section 1.

TEXAS INSTRUMENTS
POST OFFICE BOX 655012 • DALLAS, TEXAS 75265

D2329, MARCH 1977 – RE MARCH 1988

- Parallel Access
- Typical Propagation Delay Time . . . 20 ns
- Typical Power Dissipation . . . 120 mW
- Applications:
  N-Bit Storage Files
  Hex/BCD Serial-To-Parallel Converters

description

These octal registers are organized as two 4-bit bytes of storage. Upon application of a positive-going clock signal, the information stored in byte 1 is transferred into byte 2 as a new 4-bit byte is loaded into the byte 1 location via the four data lines. The full 8-bit word is available at the outputs after two clock cycles. Both the clock and the strobe lines are fully buffered.

SN54LS396 . . . J OR W PACKAGE
SN74LS396 . . . D OR N PACKAGE
(TOP VIEW)

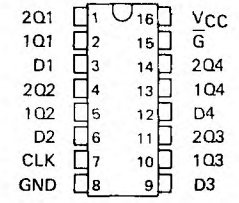

SN54LS396 . . . FK PACKAGE
(TOP VIEW)

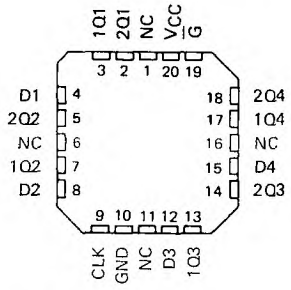

NC - No internal connection

logic symbol†

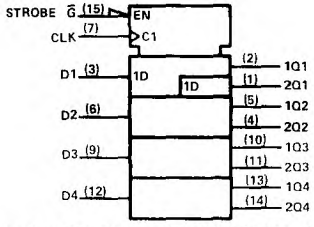

†This symbol is in accordance with ANSI/IEEE Std. 91-1984 and IEC Publication 617-12.
Pin numbers shown are for D, J, N, and W packages.

FUNCTION TABLE

INPUTS						OUTPUTS							
STROBE $\overline{G}$	CLOCK	DATA				BYTE 1				BYTE 2			
		D1	D2	D3	D4	1Q1	1Q2	1Q3	1Q4	2Q1	2Q2	2Q3	2Q4
H	X	X	X	X	X	L	L	L	L	L	L	L	L
L	↑	a	b	c	d	a	b	c	d	$1Q1_n$	$1Q2_n$	$1Q3_n$	$1Q4_n$

H = high level (steady state), L = low level (steady state), X = irrelevant (any input, including transitions)
↑ = transition from low to high level
$1Q1_n$, $1Q2_n$, $1Q3_n$, $1Q4_n$ = the level of 1Q1, 1Q2, 1Q3, and 1Q4, respectively, before the most recent ↑ transition of the clock.

PRODUCTION DATA documents contain information current as of publication date. Products conform to specifications per the terms of Texas Instruments standard warranty. Production processing does not necessarily include testing of all parameters.

logic diagram (positive logic)

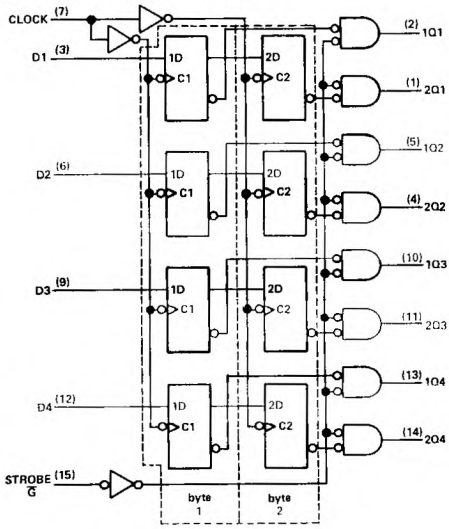

Pin numbers shown are for D, J, N, and W packages.

schematics of inputs and outputs

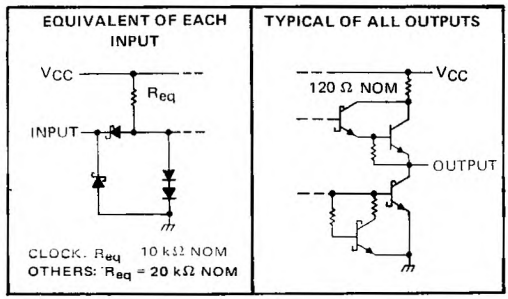

absolute maximum ratings over operating free-air temperature range (unless otherwise noted)

Supply voltage, V_{CC} (see Note 1) . . . . . 7 V
Input voltage . . . . . 7 V
Operating free-air temperature range: SN54LS396 . . . . . −55°C to 125°C
SN74LS396 . . . . . 0°C to 70°C
Storage temperature range . . . . . −65°C to 150°C

NOTE 1: Voltage values are with respect to network ground terminal.

recommended operating conditions

	SN54LS396			SN74LS396			UNIT
	MIN	NOM	MAX	MIN	NOM	MAX	
Supply voltage, V_{CC}	4.5	5	5.5	4.75	5	5.25	V
High-level output current, I_{OH}			−400			−400	μA
Low-level output current, I_{OL}			4			8	mA
Clock frequency, f_{clock}	0		30	0		30	MHz
Width of clock pulse, t_w	20			20			ns
Setup time, t_{su}	20			20			ns
Hold time, t_h	5			5			ns
Operating free-air temperature, T_A	−55		125	0		70	°C

TEXAS INSTRUMENTS
POST OFFICE BOX 655012 • DALLAS, TEXAS 75265

electrical characteristics over recommended operating free-air temperature range (unless otherwise noted)

PARAMETER			TEST CONDITIONS†		SN54LS396			[illegible]			UNIT
					MIN	TYP‡	MAX	MIN	TYP‡	MAX	
V_{IH}	High-level input voltage				2			2			V
V_{IL}	Low-level input voltage						0.7			0.8	V
V_{IK}	Input clamp voltage		V_{CC} = MIN,	I_I = −18 mA			−1.5			−1.5	V
V_{OH}	High-level output voltage		V_{CC} = MIN, V_{IL} = MAX,	V_{IH} = 2 V, I_{OH} = −400 μA	2.5	3.4		2.7	3.4		V
V_{OL}	Low-level output voltage		V_{CC} = MIN, V_{IH} = 2 V, V_{IL} = MAX	I_{OL} = 4 mA		0.25	0.4		0.25	0.4	V
				I_{OL} = 8 mA					0.35	0.5	
I_I	Input current at maximum input voltage	Clock input	V_{CC} = MAX,	V_I = 7 V			0.2			0.2	mA
		Other inputs					0.1			0.1	
I_{IH}	High-level input current	Clock input	V_{CC} = MAX,	V_I = 2.7 V			40			40	μA
		Other inputs					20			20	
I_{IL}	Low-level input current	Clock input	V_{CC} = MAX,	V_I = 0.4 V			−0.8			−0.8	mA
		Other inputs					−0.4			−0.4	
I_{OS}	Short-circuit output current§		V_{CC} = MAX		−20		−100	−20		−100	mA
I_{CC}	Supply current		V_{CC} = MAX,	See Note 2		24	40		24	40	mA

†For conditions shown as MIN or MAX, use the appropriate value specified under recommended operating conditions.
‡All typical values are at V_{CC} = 5 V, T_A = 25°C.
§Not more than one output should be shorted at a time and duration of the short-circuit should not exceed one second.
NOTE 2: I_{CC} is measured with 4.5 V applied to all inputs and all outputs open.

switching characteristics, V_{CC} = 5 V, T_A = 25°C

PARAMETER		TEST CONDITIONS	[illegible]	TYP	[illegible]	UNIT
t_{PLH}	Propagation delay time, low-to-high-level output from clock	C_L = 15 pF, R_L = 2 kΩ, See Note 3		20	30	ns
t_{PHL}	Propagation delay time, high-to-low-level output from clock			20	30	
t_{PLH}	Propagation delay time, low-to-high-level output from strobe			20	30	ns
t_{PHL}	Propagation delay time, high-to-low-level output from strobe			20	30	

NOTE 3: Load circuits and voltage waveforms are shown in Section 1.

OCTOBER 1976—REVISED MARCH 1988

- **Single-Rail Outputs on 'LS399**
- **Selects One of Two 4-Bit Data Sources and Stores Data Synchronously with System Clock**
- **Applications:**
  Dual Source for Operands and Constants in Arithmetic Processor; Can Release Processor Register Files for Acquiring New Data

  Implement Separate Registers Capable of Parallel Exchange of Contents Yet Retain External Load Capability

  Universal Type Register for Implementing Various Shift Patterns: Even Has Compound Left-Right Capabilities

SN54LS399 . . . J OR W PACKAGE
SN74LS399 . . . D OR N PACKAGE
(TOP VIEW)

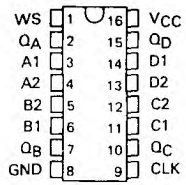

SN54LS399 . . . FK PACKAGE
(TOP VIEW)

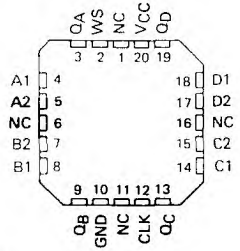

NC · No internal connection

description

This monolithic quadruple two-input multiplexer with storage provides essentially the equivalent functional capabilities of two separate MSI functions (SN54LS157/SN74LS157 and SN54LS175/SN74LS175) in a single 16-pin package.

When the word-select input is low, word 1 (A1, B1, C1, D1) is applied to the flip-flops. A high input to word select will cause the selection of word 2 (A2, B2, C2, D2). The selected word is clocked to the output terminals on the positive-going edge of the clock pulse.

Typical power dissipation is 37 milliwatts. The SN54LS399 is characterized for operation over the full military range of −55°C to 125°C. The SN74LS399 is characterized for operation from 0°C to 70°C.

FUNCTION TABLE

INPUTS		OUTPUTS			
WORD SELECT	CLOCK	Q_A	Q_B	Q_C	Q_D
L	↑	a1	b1	c1	d1
H	↑	a2	b2	c2	d2
X	L	Q_{A0}	Q_{B0}	Q_{C0}	Q_{D0}

logic symbol†

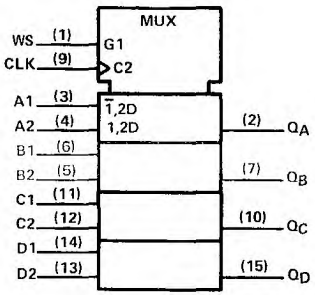

†This symbol is in accordance with ANSI/IEEE Std 91-1984 and IEC Publication 617-12.
Pin numbers shown are for D, J, N, and W packages.

PRODUCTION DATA documents contain information current as of publication date. Products conform to specifications per the terms of Texas Instruments standard warranty. Production processing does not necessarily include testing of all parameters.

logic diagram (positive logic)

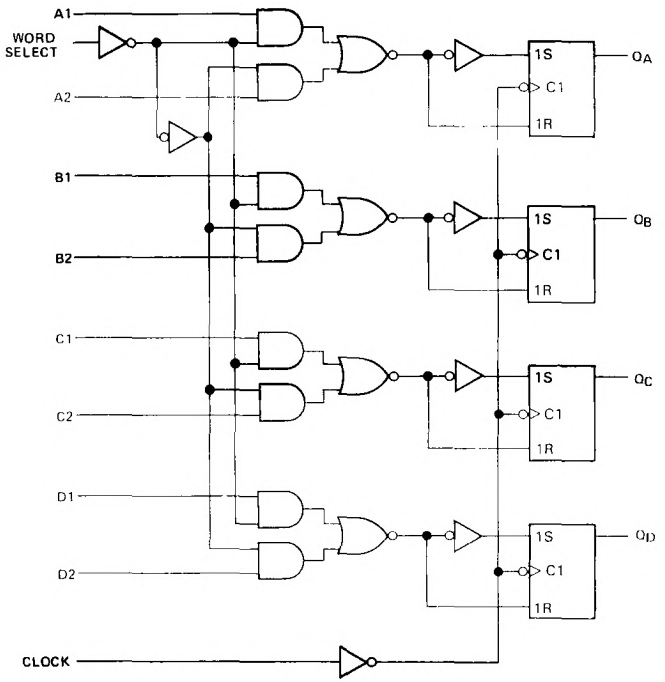

schematics of inputs and outputs

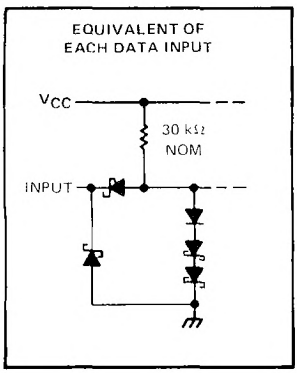

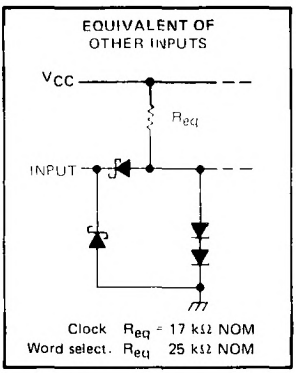

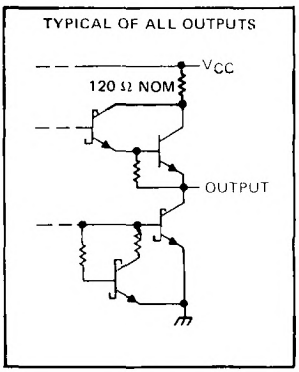

TEXAS INSTRUMENTS
POST OFFICE BOX 655012 • DALLAS, TEXAS 75265

absolute maximum ratings over operating free-air temperature range (unless otherwise noted)

Supply voltage, V_{CC} (see Note 1) . . . . . 7 V
Input voltage . . . . . 7 V
Operating free-air temperature range: SN54LS399 . . . . . −55°C to 125°C
SN74LS399 . . . . . 0°C to 70°C
Storage temperature range . . . . . −65°C to 150°C

NOTE 1: Voltage values are with respect to network ground terminals.

recommended operating conditions

		SN54LS399			SN74LS399			UNIT
		MIN	NOM	MAX	MIN	NOM	MAX	
Supply voltage, V_{CC}		4.5	5	5.5	4.75	5	5.25	V
High-level output current, I_{OH}				−400			−400	μA
Low-level output current, I_{OL}				4			8	mA
Width of clock pulse, high or low level, t_w		20			20			ns
Setup time, t_{su}	Data	25			25			ns
	Word select	45			45			
Hold time, t_h	Data	0			0			ns
	Word select	0			0			
Operating free-air temperature, T_A		−55		125	0		70	°C

electrical characteristics over recommended operating free-air temperature range (unless otherwise noted)

PARAMETER		TEST CONDITIONS†			SN54LS399			SN74LS399			UNIT
					MIN	TYP‡	MAX	MIN	TYP‡	MAX	
V_{IH}	High-level input voltage				2			2			V
V_{IL}	Low-level input voltage						0.7			0.8	V
V_{IK}	Input clamp voltage	V_{CC} = MIN,	I_I = −18 mA				−1.5			−1.5	V
V_{OH}	High-level output voltage	V_{CC} = MIN, V_{IL} = V_{IL}max	V_{IH} = 2 V, I_{OH} = −400 μA		2.5	3.4		2.7	3.4		V
V_{OL}	Low-level output voltage	V_{CC} = MIN, V_{IL} = V_{IL}max	V_{IH} = 2 V,	I_{OL} = 4 mA		0.25	0.4		0.25	0.4	V
				I_{OL} = 8 mA					0.35	0.5	
I_I	Input current at maximum input voltage	V_{CC} = MAX,	V_I = 7 V				0.1			0.1	mA
I_{IH}	High-level input current	V_{CC} = MAX,	V_I = 2.7 V				20			20	μA
I_{IL}	Low-level input current	V_{CC} = MAX,	V_I = 0.4 V				−0.4			−0.4	mA
I_{OS}	Short-circuit output current§	V_{CC} = MAX			−20		−100	−20		−100	mA
I_{CC}	Supply current	V_{CC} = MAX,	See Note 2			7.3	13		7.3	13	mA

† For conditions shown as MIN or MAX, use the appropriate value specified under recommended operating conditions.
‡ All typical values are at V_{CC} = 5 V, T_A = 25°C
§ Not more than one output should be shorted at a time, duration of the short-circuit should not exceed one second.
NOTE 2: With all outputs open and all inputs except clock low, I_{CC} is measured after applying a momentary 4.5 V, followed by ground, to the clock input

switching characteristics, V_{CC} = 5 V, T_A = 25°C

PARAMETER		TEST CONDITIONS	MIN	TYP	MAX	UNIT
t_{PLH}	Propagation delay time, low-to-high-level output	C_L = 15 pF, R_L = 2 kΩ, See Note 3		18	27	ns
t_{PHL}	Propagation delay time, high-to-low-level output			21	32	

NOTE 3: Load circuits and voltage waveforms are shown in Section 1.

D2536, JANUARY 1980 – REVISED MARCH 1988

- **Will Not Trigger from Clear**
- **D-C Triggered from Active-High or Active-Low Gated Logic Inputs**
- **Retriggerable for Very Long Output Pulses, Up to 100% Duty Cycle**
- **Overriding Clear Teminates Output Pulse**
- **'LS422 Has Internal Timing Resistor**

description

The 'LS422 and 'LS423 are identical to 'LS122 and 'LS123 except they cannot be triggered via clear.

These d-c triggered multivibrators feature output-pulse-width control by three methods. The basic pulse time is programmed by selection of external resistance and capacitance values (see typical application data). The 'LS422 contains an internal timing resistor that allows the circuits to be used with only an external capacitor, if so desired. Once triggered, the basic pulse width may be extended by retriggering the gated low-level-active (A) or high-level-active (B) inputs, or be reduced by use of the overriding clear. Figure 1 illustrates pulse control by retriggering and early clear.

The 'LS422 and 'LS423 have enough Schmitt hysteresis to ensure jitter-free triggering from the B input with transition rates as slow as 0.1 millivolt per nanosecond. The 'LS422 R_{int} is nominally 10 k ohms.

The SN54LS422 and SN54LS423 are characterized for operation over the full military temperature range of −55°C to 125°C. The SN74LS422 and SN74LS423 are characterized for operation from 0°C to 70°C.

SN54LS423 . . . J OR W PACKAGE
SN74LS423 . . . D OR N PACKAGE
(TOP VIEW) (SEE NOTES 1 THRU 4)

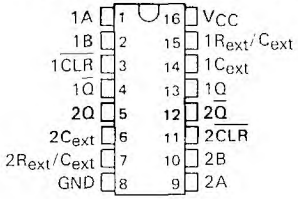

SN54LS422 . . . J OR W PACKAGE
SN74LS422 . . . D OR N PACKAGE
(TOP VIEW) (SEE NOTES 1 THRU 4)

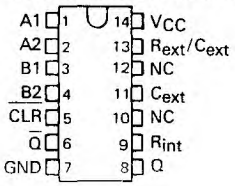

SN54LS422 . . . FK PACKAGE
(TOP VIEW) (SEE NOTES 1 THRU 4)

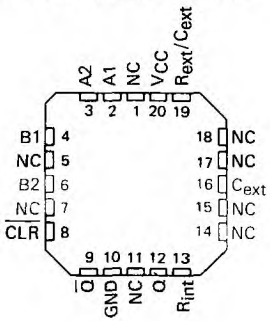

SN54LS423 . . . FK PACKAGE
(TOP VIEW) (SEE NOTES 1 THRU 4)

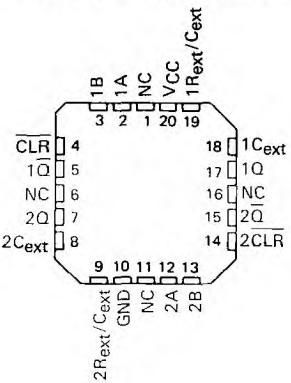

NOTES. 1. An external timing capacitor may be connected between C_{ext} and R_{ext}/C_{ext} (positive).
2. To use the internal timing resistor of 'LS422, connect R_{int} to V_{CC}.
3. For improved pulse width accuracy and repeatability, connect an external resistor between R_{ext}/C_{ext} and V_{CC} with R_{int} open-circuited.
4. To obtain variable pulse widths, connect an external variable resistance between R_{int} or R_{ext}/C_{ext} and V_{CC}.

PRODUCTION DATA documents contain information current as of publication date. Products conform to specifications per the terms of Texas Instruments standard warranty. Production processing does not necessarily include testing of all parameters.

description (continued)

'LS422
FUNCTION TABLE

INPUTS					OUTPUTS	
CLEAR	A1	A2	B1	B2	Q	$\bar{Q}$
L	X	X	X	X	L	H
X	H	H	X	X	L↑	H↑
X	X	X	L	X	L↑	H↑
X	X	X	X	L	L↑	H↑
H	L	X	↑	H	⎍	⎎
H	L	X	H	↑	⎍	⎎
H	X	↓	↑	H	⎍	⎎
H	X	↓	H	↑	⎍	⎎
H	↑	↓	H	H	⎍	⎎
H	↓	↓	H	H	⎍	⎎
H	↓	H	H	H	⎍	⎎

'LS423
FUNCTION TABLE

INPUTS			OUTPUTS	
CLEAR	A	B	Q	$\bar{Q}$
L	X	X	L	H
X	H	X	L↑	H↑
X	X	L	L↑	H↑
H	L	↑	⎍	⎎
H	↓	H	⎍	⎎

† These lines of the functional tables assume that the indicated steady-state conditions at the A and B inputs have been set up long enough to complete any pulse started before the set up.

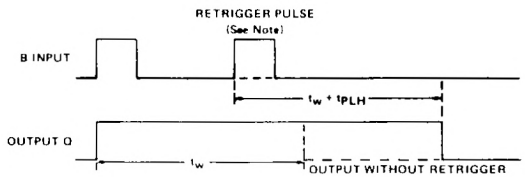

OUTPUT PULSE CONTROL USING RETRIGGER PULSE

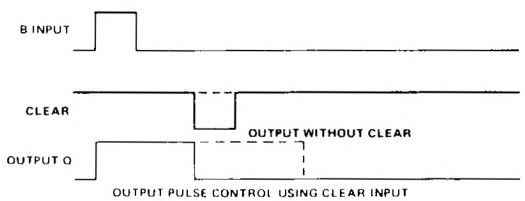

OUTPUT PULSE CONTROL USING CLEAR INPUT

NOTE: Retrigger pulses starting before 0.22 C_{ext} (in picofrads) nanoseconds after the initial trigger pulse will be ignored and the output pulse will remain unchanged.

FIGURE 1–TYPICAL INPUT/OUTPUT PULSES

TEXAS INSTRUMENTS
POST OFFICE BOX 655012 • DALLAS, TEXAS 75265

logic symbols†

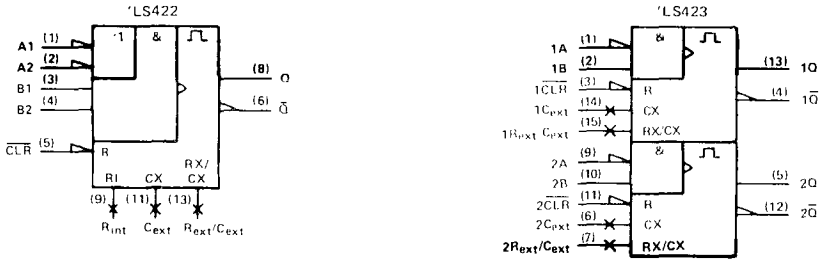

† These symbols are in accordance with ANSI/IEEE Std 91-1984 and IEC Publication 617-12.

logic diagrams (positive logic)

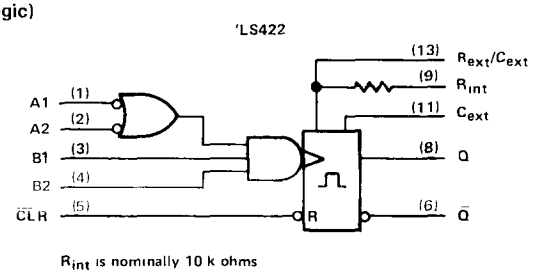

R_{int} is nominally 10 k ohms

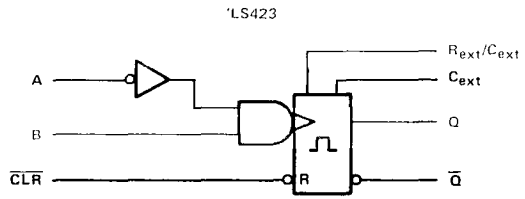

Pin numbers shown are for D, J, N, and W packages.

schematics of inputs and outputs

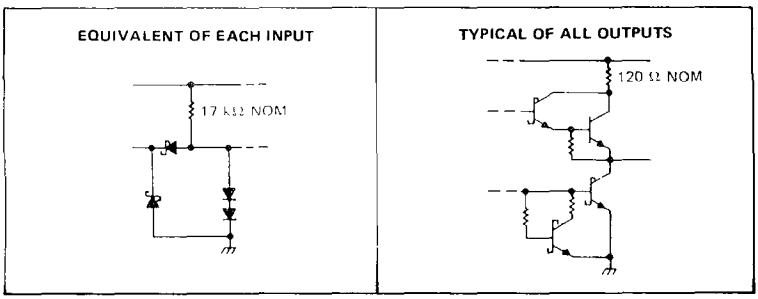

recommended operating conditions

	SN54LS'			SN74LS'			UNIT
	MIN	NOM	MAX	MIN	NOM	MAX	
Supply voltage, V_{CC}	4.5	5	5.5	4.75	5	5.25	V
High-level output current, I_{OH}			−400			−400	μA
Low-level output current, I_{OL}			4			8	mA
Pulse width, t_w	40			40			ns
External timing resistance, R_{ext}	5		180	5		260	kΩ
External capacitance, C_{ext}	No restriction			No restriction			
Wiring capacitance at R_{ext}/C_{ext} terminal			50			50	pF
Operating free-air temperature, T_A	−55		125	0		70	°C

electrical characteristics over recommended operating free-air temperature range (unless otherwise noted)

PARAMETER		TEST CONDITIONS†		SN54LS'			SN74LS'			UNIT
				MIN	TYP‡	MAX	MIN	TYP‡	MAX	
V_{IH}	High-level input			2			2			V
V_{IL}	Low-level input					0.7			0.8	V
V_{IK}	Input	V_{CC} = MIN,	I_I = −18 mA			−1.5			−1.5	V
V_{OH}	High-level output voltage	V_{CC} = MIN, V_{IL} = V_{IL}max	V_{IH} = 2 V, I_{OH} = −400 μA	2.5	3.5		2.7	3.5		V
V_{OL}	Low-level output voltage	V_{CC} = MIN, V_{IL} = V_{IL}max	V_{IH} = 2 V, I_{OL} = 4 mA		0.25	0.4			0.4	V
			I_{OL} = 8 mA						0.5	
I_I	Input current at maximum input voltage	V_{CC} = MAX,	V_I = 7 V			0.1			0.1	mA
I_{IH}	High-level input current	V_{CC} = MAX,	V_I = 2.7 V			20			20	μA
I_{IL}	Low-level input current	V_{CC} = MAX,	V_I = 0.4 V			−0.4			−0.4	mA
I_{OS}		V_{CC} = MAX		−20		−100	−20		−100	mA
I_{CC}	(quiescent or triggered)	V_{CC} = MAX,	See Note 6		6	11		6		mA
					12	20		12	20	

† For conditions shown as MIN or MAX, use the appropriate value specified under recommended operating conditions.
‡ All typical values are at V_{CC} = 5 V, T_A = 25°C.
§ Not more than one output should be shorted at a time and duration of the short-circuit should not exceed one second.
NOTES: 5. To measure V_{OH} at Q, V_{OL} at $\overline{Q}$, or I_{OS} at Q, ground R_{ext}/C_{ext}, apply 2 V to B and clear, and pulse A from 2 V to 0 V.
6. With all outputs open and 4.5 V applied to all data and clear inputs, I_{CC} is measured after a momentary ground, then 4.5 V, is applied to clock.

switching characteristics, V_{CC} = 5 V, T_A = 25°C, see note 7

PARAMETER¶	FROM (INPUT)	TO (OUTPUT)	TEST CONDITIONS		MIN	TYP	MAX	UNIT
t_{PLH}	A	Q	C_{ext} = 0, C_L = 15 pF,	R_{ext} = 5 kΩ, R_L = 2 kΩ		23	33	ns
	B					23	44	
t_{PHL}	A	$\overline{Q}$				32	45	ns
	B					34	56	
t_{PHL}	Clear	Q				20	27	ns
t_{PLH}		$\overline{Q}$				28	45	
t_{wQ} (min)	A or B	Q				116	200	ns
t_{wQ}	A or B	Q	C_{ext} = 1000 pF, C_L = 15 pF,	R_{ext} = 10 kΩ, R_L = 2 kΩ	4	4.5	5	μs

¶ t_{wQ} ≡ width of pulse output Q.
NOTE 7: Load circuits and voltage waveforms are shown in Section 1.

TEXAS INSTRUMENTS
POST OFFICE BOX 655012 • DALLAS, TEXAS 75265

TYPICAL APPLICATION DATA FOR 'LS422, 'LS423†

The basic output pulse width is essentially determined by the values of external capacitance and timing resistance. For pulse widths when $C_{ext} \leq 1000$ pF, use Figure 3. For C_{ext} between 0.1 nF and 1 μF, the pulse width may be defined as:

$$t_W \approx K \cdot R_T \cdot C_{ext}$$

with K obtained from Figure 4.

When $C_{ext} \geq 1\ \mu F$, the output pulse width is defined as:

$$t_W \approx 0.33 \cdot R_T \cdot C_{ext}$$

Where

R_T is in kilohms (internal or external timing resistance)
C_{ext} is in pF
t_W is in nanoseconds

For maximum noise immunity, system ground should be applied to the C_{ext} node, even though the C_{ext} node is already tied to the ground lead internally. Due to the timing scheme used by the 'LS422 and 'LS423, a switching diode is not required to prevent reverse biasing when using electrolytic capacitors.

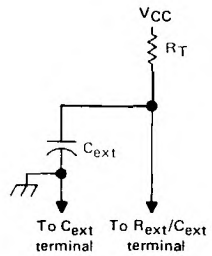

TIMING COMPONENT CONNECTIONS
FIGURE 2

'LS422, 'LS423
TYPICAL OUTPUT PULSE WIDTH
vs
EXTERNAL TIMING CAPACITANCE

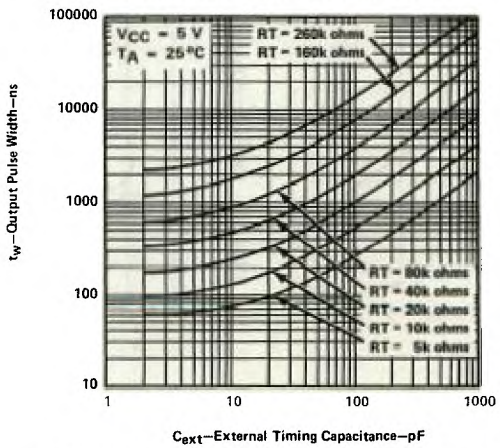

† This value of resistance exceeds the maximum recommended for use over the full temperature range of the SN54LS circuits.

FIGURE 3

TYPICAL APPLICATION DATA FOR 'LS422, 'LS423 †

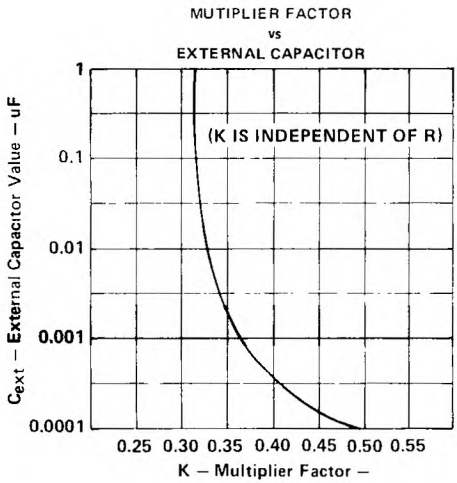

FIGURE 4

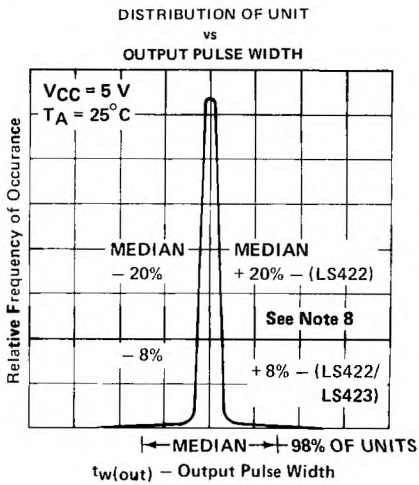

FIGURE 5

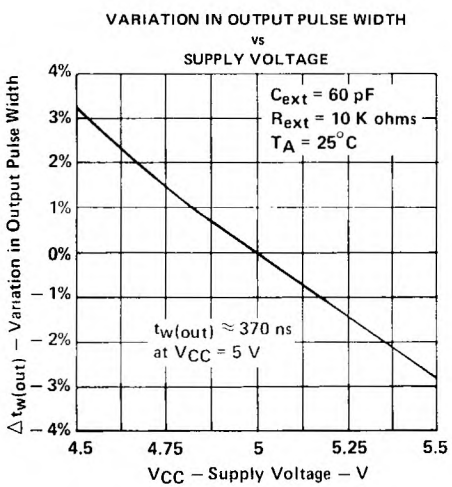

FIGURE 6

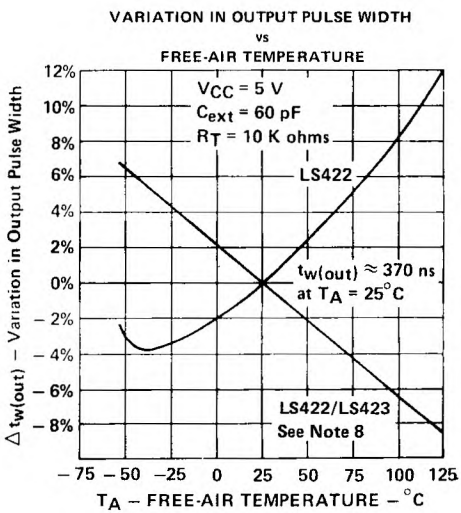

FIGURE 7

NOTE 8: For the LS422, the internal timing resistor, R_{int} was used. For the LS422/423, an external timing resistor was used for R_T.
† Data for temperatures below 0°C and above 70°C and for supply voltages below 4.75 V and above 5.25 V are applicable for SN54LS422 and SN54LS423 only.

TEXAS INSTRUMENTS
POST OFFICE BOX 655012 • DALLAS, TEXAS 75265

D2630, JANUARY 1981—REVISED MARCH 1988

MOS MEMORY INTERFACE

- **Can Drive High-Impedance Loads**
- **Interchangeable with National DS16149 DS16179 Drivers**
- **High-Speed Switching**
- **Minimum Input Current Required**
- Damping Output Resistor Reduces Transients

SN54S436 . . . J OR W PACKAGE
SN74S436 . . . D OR N PACKAGE
(TOP VIEW)

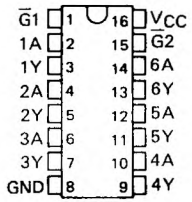

SN54S436 . . . FK PACKAGE
(TOP VIEW)

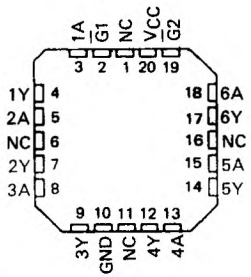

NC - No internal connection

description

The SN54S436 and SN74S436 are monolithic integrated TTL-to-MOS drivers and interface circuits. The p-n-p input transistors use minimum current allowing increased fan-out to these drivers. Schottky-clamped transistor logic permits high-speed operation, minimum propagation time.

The small series damping resistor has been included in the design of the 'S436 to eliminate undesired output transient overshoot. Either enable, $\overline{G}$, when high, sets the outputs to the high level for MOS RAM refresh applications.

FUNCTION TABLE

ENABLE INPUTS		INPUT	OUTPUT
$\overline{G1}$	$\overline{G2}$		
L	L	L	H
L	L	H	L
X	H	X	H
H	X	X	H

H = high level, L = low level, X = irrelevant

logic symbol†

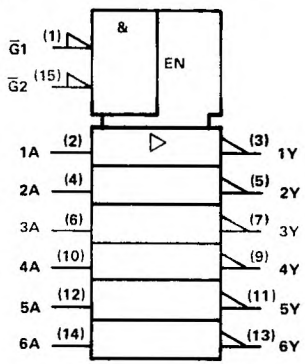

schematics of inputs and outputs

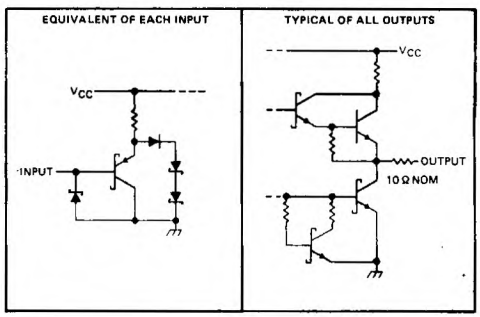

†This symbol is in accordance with ANSI/IEEE Std. 91-1984 and IEC Publication 617-12.
Pin numbers shown are for D, J, N, and W packages.

PRODUCTION DATA documents contain information current as of publication date. Products conform to specifications per the terms of Texas Instruments standard warranty. Production processing does not necessarily include testing of all parameters.

absolute maximum ratings over operating free-air temperature range (unless otherwise noted)

Supply voltage, V_{CC} (see Note 1) . . . . . 7 V
Input voltage range . . . . . −1.5 to 7 V
Continuous total dissipation at (or below) 25°C free-air temperature (see Note 2)
J package . . . . . 1375 mW
N package . . . . . 1150 mW
W package . . . . . 1000 mW
Operating free-air temperature range: SN54S436 . . . . . −55°C to 125°C
SN74S436 . . . . . 0°C to 70°C
Storage temperature range . . . . . −65°C to 150°C

NOTES: 1. All voltage values are with respect to network ground terminal.
2. For operation above 25°C free-air temperature, derate as follows: J package, 11.0 mW/°C, N package, 9.2 mW/°C, W package, 8.0 mW/°C.

recommended operating conditions

		SN54S436			SN74S436			UNIT
		MIN	NOM	MAX	MIN	NOM	MAX	
V_{CC}	Supply voltage	4.5	5	5.5	4.75	5	5.25	V
V_{IH}	High-level input voltage	2			2			V
V_{IL}	Low-level input voltage			0.8			0.8	V
T_A	Operating free-air temperature	−55		125	0		70	°C

electrical characteristics over recommended operating free-air temperature range (unless otherwise noted)

PARAMETER	TEST CONDITIONS		SN54S436			SN74S436			UNIT
			MIN	TYP†	MAX	MIN	TYP†	MAX	
V_{IK}	V_{CC} = MIN, I_I = −18 mA			−0.75	−1.2		−0.75	−1.2	V
V_{OH}	V_{CC} = MIN, I_{OH} = −10 μA		3.4	4.3		3.5	4.3		V
	V_{CC} = MIN, I_{OH} = −1 mA	'S436	2.4	3.5		2.6	3.5		
		'S437	2.5	3.5		2.7	3.5		
V_{OL}	V_{CC} = MIN, I_{OL} = 10 μA			0.25	0.4		0.25	0.35	V
	V_{CC} = MIN, I_{OL} = 20 mA	'S436		0.6	1.1		0.6	1	
		'S437		0.4	0.5		0.4	0.5	
I_{OL}	V_{CC} = MIN, V_O = 4.5 V, V_I = 2 V See Note 3			150	200		150	200	mA
I_{OS}‡	V_{CC} = MAX, V_O = 0 V		−100	−250	−400	−100	−250	−400	mA
I_I	V_{CC} = MAX, V_{IH} = 5.5 V				1			1	mA
I_{IH}	V_{CC} = MAX, V_{IH} = 2.7 V			0.1	50		0.1	50	μA
I_{IL}	V_{CC} = MAX, V_{IL} = 0.5 V			−100			−100		μA
I_{CC}	V_{CC} = MAX, G inputs at 0 V, All other inputs at 4.5 V			33	60		33	60	mA
	V_{CC} = MAX, All inputs at 0 V			14	20		14	20	

† All typical values are at V_{CC} = 5 V, T_A = 25°C.
‡ Not more than one output should be shorted at a time, and duration of the short-circuit should not exceed one second.

TEXAS INSTRUMENTS
POST OFFICE BOX 655012 • DALLAS, TEXAS 75265

switching characteristics, V_{CC} = 5 V, T_A = 25°C

PARAMETER		TEST CONDITIONS		TYP	MAX	UNIT
t_{AHYH}	Delay time from A high to Y starting low	See Figure 1	C_L = 50 pF	4.5	7	ns
			C_L = 500 pF	12	16	
t_{ALYH}	Delay time from A low to Y starting high	See Figure 1	C_L = 50 pF	5	8	ns
			C_L = 500 pF	11	16	
t_{GHYH}	Delay time from G high to Y starting high	R_L = 2 kΩ to Gnd, See Figure 2	C_L = 50 pF,	10	18	ns
t_{GLYL}	Delay time from G low to Y starting low	R_L = 2 kΩ to V_{CC}, See Figure 3	C_L = 50 pF,	11	18	ns
t_{THL}	Transition time, high-to-low-level output	See Figure 1	C_L = 50 pF	5	8	ns
			C_L = 500 pF	15	30	
t_{TLH}	Transition time, low-to-high-level output	See Figure 1	C_L = 50 pF	6	9	ns
			C_L = 500 pF	15	30	

PARAMETER MEASUREMENT INFORMATION

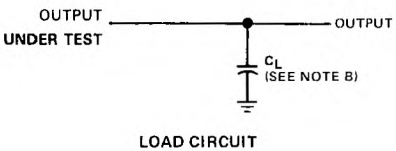

LOAD CIRCUIT

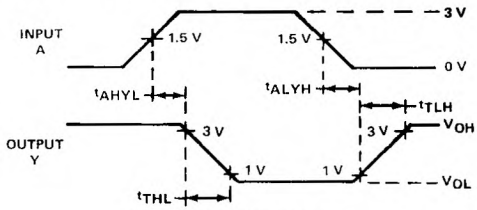

VOLTAGE WAVEFORMS

FIGURE 1

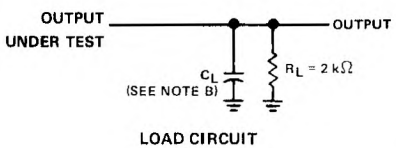

LOAD CIRCUIT

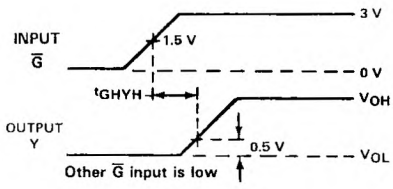

VOLTAGE WAVEFORMS

FIGURE 2

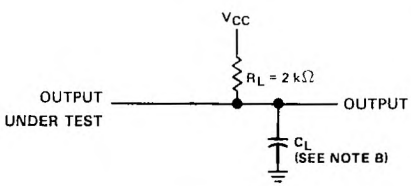

LOAD CIRCUIT

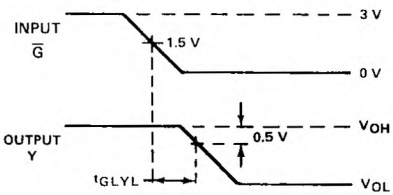

VOLTAGE WAVEFORMS

FIGURE 3

NOTES: A. Input pulses are supplied by a generator having the following characteristics: PRR < 1 MHz, Z_{out} ≈ 50 Ω, t_r < 5 ns.
B. C_L includes probe and jig capacitance.

QUADRUPLE TRIDIRECTIONAL BUS TRANSCEIVERS

D2425, AUGUST 1979–REVISED MARCH 1988

- 3-Way Asynchronous Communication
- On-Chip Bus Selection Decoding
- Input Hysteresis Improves Noise Margin
- Choice of Open-Collector or 3-State Outputs

SN54LS' . . . J PACKAGE
SN74LS' . . . DW OR N PACKAGE
(TOP VIEW)

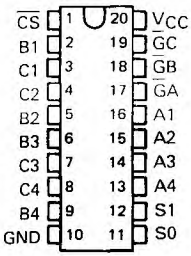

SN54LS' . . . FK PACKAGE
(TOP VIEW)

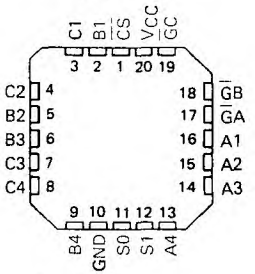

description

These bus transceivers are designed for asynchronous three-way communication between four-line data buses. They give the designer a choice of selecting inverting, noninverting, or a combination of inverting and noninverting data paths with either 3-state or open-collector outputs.

The S0 and S1 inputs select the bus from which data are to be transferred. The $\overline{G}$ inputs enable the bus or buses to which data are to be transferred. The port for any bus selected for input and any other bus not enabled for output will be at high impedance including those of the open-collector devices.

The SN54LS440 through SN54LS442 and SN54LS444 are characterized for operation over the fullmilitary temperature range of −55°C to 125°C. The SN74LS440 through SN74LS442 and SN74LS444 are characterized for operation from 0°C to 70°C.

FUNCTION TABLE

INPUTS						TRANSFERS BETWEEN BUSES		
$\overline{CS}$	S1	S0	$\overline{GA}$	$\overline{GB}$	$\overline{GC}$	'LS440 'LS442	'LS441	'LS444
H	X	X	X	X	X	None	None	None
X	H	H	X	X	X	None	None	None
X	X	X	H	H	H	None	None	None
X	L	L	X	H	H	None	None	None
X	L	H	H	X	H	None	None	None
X	H	L	H	H	X	None	None	None
L	L	L	X	L	L	A → B, A → C	$\overline{A}$ → B, $\overline{A}$ → C	$\overline{A}$ → B, $\overline{A}$ → C
L	L	H	L	X	L	B → C, B → A	$\overline{B}$ → C, $\overline{B}$ → A	B → C, $\overline{B}$ → A
L	H	L	L	L	X	C → A, C → B	$\overline{C}$ → A, $\overline{C}$ → B	$\overline{C}$ → A, C → B
L	L	L	X	L	H	A → B	$\overline{A}$ → B	$\overline{A}$ → B
L	L	H	H	X	L	B → C	$\overline{B}$ → C	B → C
L	H	L	L	H	X	C → A	$\overline{C}$ → A	$\overline{C}$ → A
L	L	L	X	H	L	A → C	$\overline{A}$ → C	$\overline{A}$ → C
L	L	H	L	X	H	B → A	$\overline{B}$ → A	$\overline{B}$ → A
L	H	L	H	L	X	C → B	$\overline{C}$ → B	C → B

DEVICE	OUTPUT	LOGIC
'LS440	Open-Collector	True
'LS441	Open-Collector	Inverting
'LS442	3-State	True
'LS444	3-State	True/Inverting

2 TTL Devices

PRODUCTION DATA documents contain information current as of publication date. Products conform to specifications per the terms of Texas Instruments standard warranty. Production processing does not necessarily include testing of all parameters.

logic symbols†

'LS440

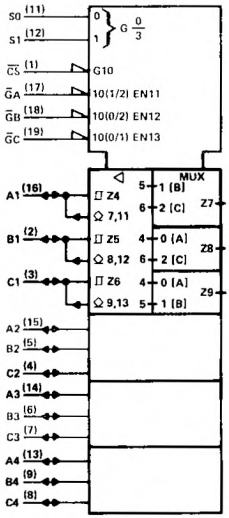

'LS441

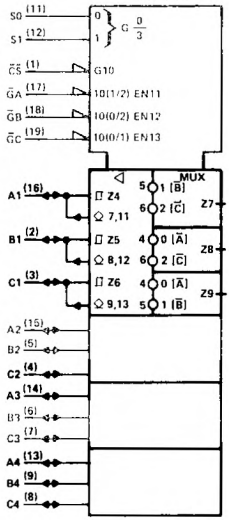

'LS442

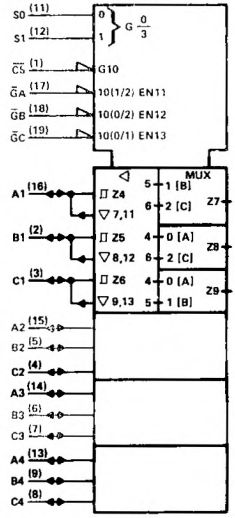

'LS444

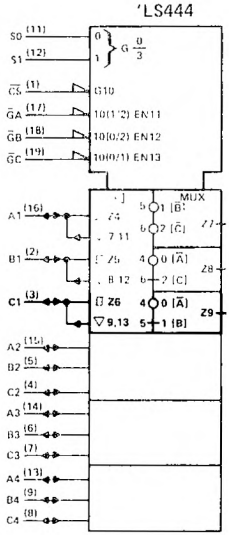

†These symbols are in accordance with ANSI/IEEE Std 91-1984 and IEC Publication 617-12.
Pin numbers shown are for DW, J, and N packages.

TEXAS INSTRUMENTS
POST OFFICE BOX 655012 • DALLAS, TEXAS 75265

logic diagram (composite showing one of four transceivers from each type, positive logic)

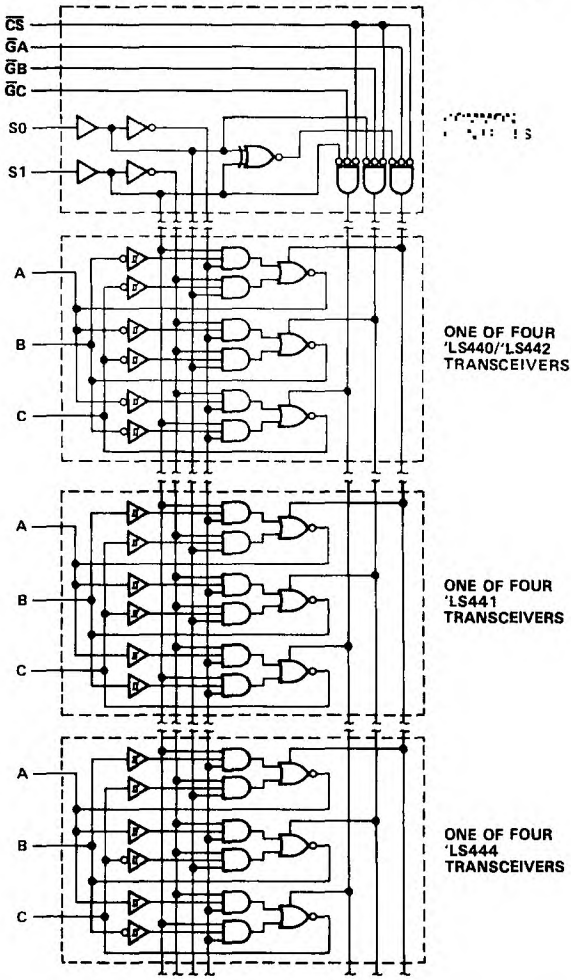

absolute maximum ratings over operating free-air temperature range (unless otherwise noted)

Supply voltage, V_{CC} (see Note 1)	7 V
Input voltage	7 V
Off-state output voltage	5.5 V
Operating free-air temperature range: SN54LS'	−55°C to 125°C
SN74LS'	0°C to 70°C
Storage temperature range	−65°C to 150°C

NOTE 1: Voltage values are with respect to network ground terminal.

recommended operating conditions

	SN54LS440 SN54LS441			SN74LS440 SN74LS441			UNIT
	MIN	NOM	MAX	MIN	NOM	MAX	
Supply voltage, V_{CC} (see Note 1)	4.5	5	5.5	4.75	5	5.25	V
High-level output voltage, V_{OH}			5.5			5.5	V
Low-level output current, I_{OL}			12			24	mA
Operating free-air temperature, T_A	−55		125	0		70	C

NOTE 1: Voltage values are with respect to the network ground terminal.

electrical characteristics over recommended operating free-air temperature range (unless otherwise noted)

PARAMETER			TEST CONDITIONS†		'LS' MIN	'LS' ‡	'LS' MAX	'LS' MIN	'LS' ‡	'LS' MAX	UNIT
V_{IH}	High-level input voltage				2			2			V
V_{IL}	Low-level input voltage						0.5			0.6	V
V_{IK}	Input clamp voltage		V_{CC} = MIN	I_I = −18 mA			−1.5			−1.5	V
	Hysteresis ($V_{T+} - V_{T-}$)	A,B,C input	V_{CC} = MIN		0.1	0.4		0.2	0.4		V
I_{OH}	High-level output current		V_{CC} = MIN, V_{IH} = 2 V,	V_{OH} = 5.5 V, V_{IL} = V_{IL}max			100			100	μA
V_{OL}	Low-level output voltage		V_{CC} = MIN, V_{IH} = 2 V, V_{IL} = V_{IL}max	I_{OL} = 12 mA		0.25	0.4		0.25	0.4	V
				I_{OL} = 24 mA					0.35	0.5	V
I_I	Input current at maximum input voltage	A,B,C input	V_{CC} = MAX	V_I = 5.5 V			0.1			0.1	mA
		All others		V_I = 7 V			0.1			0.1	
I_{IH}	High-level input current		V_{CC} = MAX,	V_I = 2.7 V			20			20	uA
I_{IL}	Low-level input current		V_{CC} = MAX,	V_I = 0.4 V			−0.4			−0.4	mA
I_{CC}	Supply current	Outputs low	V_{CC} = MAX,	Outputs open		62	90		62	90	mA
		Outputs disabled				64	95		64	95	

† For conditions shown as MIN or MAX, use the appropriate value specified under recommended operating conditions.
‡ All typical values are at V_{CC} = 5 V, T_A = 25°C.

switching characteristics at V_{CC} = 5 V, R_L = 667 Ω, C_L = 45 pF, T_A = 25°C, see note 2

PARAMETER		FROM (INPUT)	TO (OUTPUT)	'LS440 MIN	'LS440 TYP	'LS440 MAX	'LS441	'LS441 TYP	'LS441 MAX	UNIT
t_{PLH}	Propagation delay time, low-to-high level output	A	B		24	35		21	30	ns
		A	C		24	35		21	30	
		B	A		24	35		21	30	
		B	C		24	35		21	30	
		C	A		24	35		21	30	
		C	B		24	35		21	30	
t_{PHL}	Propagation delay time, high-to-low level output	A	B		20	30		9	15	ns
		A	C		20	30		9	15	
		B	A		20	30		9	15	
		B	C		20	30		9	15	
		C	A		20	30		9	15	
		C	B		20	30		9	15	
t_{PLH}	Propagation delay time, low-to-high level output	Any $\overline{G}$	A,B,C		29	45		23	35	ns
		S0,S1	A,B,C		33	50		27	40	
		$\overline{CS}$	A,B,C		31	45		26	40	
t_{PHL}	Propagation delay time, high-to-low level output	Any $\overline{G}$	A,B,C		27	40		20	30	ns
		S0,S1	A,B,C		32	50		26	40	
		$\overline{CS}$	A,B,C		28	45		21	30	

NOTE 2: Load circuits and voltage waveforms are shown in Section 1.

TEXAS INSTRUMENTS
POST OFFICE BOX 655012 • DALLAS, TEXAS 75265

recommended operating conditions

	SN54LS442 SN54LS444			SN74LS442 SN74LS444			UNIT
	MIN	NOM	MAX	MIN	NOM	MAX	
Supply voltage, V_{CC} (see Note 1)	4.5	5	5.5	4.75	5	5.25	V
High-level output current, I_{OH}			−12			−15	mA
Low-level output current, I_{OL}			12			24	mA
Operating free-air temperature, T_A	−55		125	0		70	°C

NOTE 1: Voltage values are with respect to the network ground terminal.

electrical characteristics over recommended operating free-air temperature range (unless otherwise noted)

PARAMETER			TEST CONDITIONS†		SN54LS' MIN	SN54LS' TYP‡	SN54LS' MAX	SN74LS' MIN	SN74LS' TYP‡	SN74LS' MAX	UNIT
V_{IH}	High-level input voltage				2			2			V
V_{IL}	Low-level input voltage						0.5			0.6	V
V_{IK}	Input clamp voltage		V_{CC} = MIN,	I_I = −18 mA			−1.5			−1.5	V
	Hysteresis ($V_{T+} - V_{T-}$)	A,B,C input	V_{CC} = MIN		0.1	0.4		0.2	0.4		V
V_{OH}	High-level output voltage		V_{CC} = MIN, V_{IH} = 2 V, V_{IL} = V_{IL}max	I_{OH} = −3 mA	2.4	3.4		2.4	3.4		V
				I_{OH} = MAX	2			2			
V_{OL}	Low-level output voltage		V_{CC} = MIN, V_{IH} = 2 V, V_{IL} = V_{IL}max	I_{OL} = 12 mA		0.25	0.4		0.25	0.4	V
				I_{OL} = 24 mA					0.35	0.5	
I_{OZH}	Off-state output current, high-level voltage applied		V_{CC} = MAX, $\overline{CS}$ at 2 V	V_O = 2.7 V			20			20	μA
I_{OZL}	Off-state output current, low-level voltage applied			V_O = 0.4 V			−400			−400	
I_I	Input current at maximum input voltage	A, B, C	V_{CC} = MAX	V_I = 5.5 V			0.1			0.1	mA
		Others		V_I = 7 V			0.1			0.1	
I_{IH}	High-level input current		V_{CC} = MAX,	V_I = 2.7 V			20			20	μA
I_{IL}	Low-level input current		V_{CC} = MAX,	V_I = 0.4 V			−0.4			−0.4	mA
I_{OS}	Short circuit output current§		V_{CC} = MAX		−40		−225	−40		−225	mA
I_{CC}	Supply current	Outputs low	V_{CC} = MAX,	Outputs open		62	90		62	90	mA
		Outputs at Hi-Z				64	95		64	95	

† For conditions shown as MIN or MAX, use the appropriate value specified under recommended operating conditions.
‡ All typical values are at V_{CC} = 5 V, T_A = 25°C.
§ Not more than one output should be shorted at a time, and duration of the short circuit should not exceed one second.

switching characteristics at V_{CC} = 5 V, T_A = 25°C, see note 2

PARAMETER		FROM (INPUT)	TO (OUTPUT)	TEST CONDITIONS	'LS442			'LS444			UNIT
					MIN	TYP	MAX	MIN	TYP	MAX	
t_{PLH}	Propagation delay time, low-to-high level output	A	B	C_L = 45 pF, R_L = 667 Ω		10	14		9	14	ns
		A	C			10	14		9	14	
		B	A			10	14		9	14	
		B	C			10	14		10	14	
		C	A			10	14		9	14	
		C	B			10	14		10	14	
t_{PHL}	Propagation delay time, high-to-low level output	A	B			13	20		7	13	ns
		A	C			13	20		7	13	
		B	A			13	20		7	13	
		B	C			13	20		13	20	
		C	A			13	20		7	13	
		C	B			13	20		13	20	
t_{PZL}	Output enable time to low level	Any $\overline{G}$	A,B,C			22	33		22	33	ns
		S0,S1	A,B,C			28	42		28	42	
		$\overline{CS}$	A,B,C			23	36		23	36	
t_{PZH}	Output enable time to high level	$\overline{G}$, S, $\overline{CS}$	A,B,C			21	32		24	32	ns
t_{PLZ}	Output disable time from low level	$\overline{G}$, S, $\overline{CS}$	A,B,C	C_L = 5 pF, R_L = 667 Ω		14	35		14	25	ns
t_{PHZ}	Output disable time from high level	$\overline{G}$, S, $\overline{CS}$	A,B,C			14	25		14	25	ns

NOTE 2: Load circuits and voltage waveforms are shown in Section 1.

schematics of inputs and outputs

EQUIVALENT OF EACH INPUT

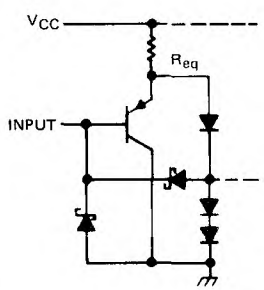

R_{eq}: $\overline{G}A$, $\overline{G}B$, $\overline{G}C$ 9 kΩ NOM
All others = 5 kΩ NOM

TYPICAL OF 3-STATE OUTPUTS

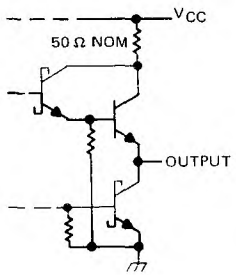

TYPICAL OF OPEN-COLLECTOR OUTPUTS

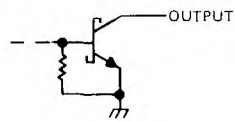

TEXAS INSTRUMENTS
POST OFFICE BOX 655012 • DALLAS, TEXAS 75265

D2427, NOVEMBER 1977—REVISED MARCH 1988

FOR USE AS LAMP, RELAY, OR MOS DRIVERS

- Low-Voltage Version of SN54LS145/ SN74LS145
- Full Decoding of Input Logic
- SN74LS445 Has 80-mA Sink-Current Capability
- All Outputs Are Off for Invalid BCD Input Conditions
- Low Power Dissipation . . . 35 mW Typical

SN54LS445 . . . J PACKAGE
SN74LS445 . . . D OR N PACKAGE
(TOP VIEW)

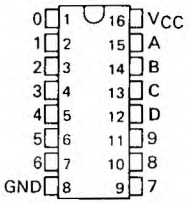

SN54LS445 . . . FK PACKAGE
(TOP VIEW)

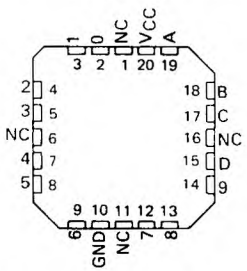

NC - No internal connection

logic

FUNCTION TABLE

NO.	INPUTS				OUTPUTS									
	D	C	B	A	0	1	2	3	4	5	6	7	8	9
0	L	L	L	L	L	H	H	H	H	H	H	H	H	H
1	L	L	L	H	H	L	H	H	H	H	H	H	H	H
2	L	L	H	L	H	H	L	H	H	H	H	H	H	H
3	L	L	H	H	H	H	H	L	H	H	H	H	H	H
4	L	H	L	L	H	H	H	H	L	H	H	H	H	H
5	L	H	L	H	H	H	H	H	H	L	H	H	H	H
6	L	H	H	L	H	H	H	H	H	H	L	H	H	H
7	L	H	H	H	H	H	H	H	H	H	H	L	H	H
8	H	L	L	L	H	H	H	H	H	H	H	H	L	H
9	H	L	L	H	H	H	H	H	H	H	H	H	H	L
INVALID	H	L	H	L	H	H	H	H	H	H	H	H	H	H
	H	L	H	H	H	H	H	H	H	H	H	H	H	H
	H	H	L	L	H	H	H	H	H	H	H	H	H	H
	H	H	L	H	H	H	H	H	H	H	H	H	H	H
	H	H	H	L	H	H	H	H	H	H	H	H	H	H
	H	H	H	H	H	H	H	H	H	H	H	H	H	H

H = high level (off), L = low level (on)

description

These monolithic BCD-to-decimal decoder/drivers consist of eight inverters and ten four-input NAND gates. The inverters are connected in pairs to make BCD input data available for decoding by the NAND gates. Full decoding of valid BCD input logic ensures that all outputs remain off for all invalid binary input conditions. These decoders feature high-performance, n-p-n output transistors designed for use as indicator/ relay drivers or as open-collector logic-circuit drivers. Each of the output transistors will sink up to 80 milliamperes of current. Each input is one Series 54LS/ 74LS standard load. Inputs and outputs are entirely compatible for use with TTL logic circuits, and the outputs are compatible for interfacing with most MOS integrated circuits. Power dissipation is typically 35 milliwatts.

logic diagram (positive logic)

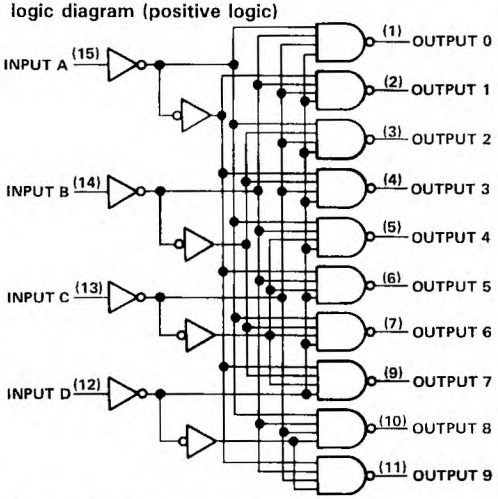

Pin numbers shown are for D, J, and N packages.

PRODUCTION DATA documents contain information current as of publication date. Products conform to specifications per the terms of Texas Instruments standard warranty. Production processing does not necessarily include testing of all parameters.

absolute maximum ratings over operating free-air temperature range (unless otherwise noted)

Supply voltage, V_{CC} (see Note 1) . . . . . 7 V
Input voltage . . . . . 7 V
Operating free-air temperature range: SN54LS445 . . . . . −55°CC to 125°C
SN74LS445 . . . . . 0°C to 70°C
Storage temperature range . . . . . −65°C to 150°C

NOTE 1: Voltage values are with respect to network ground terminal.

recommended operating conditions

	SN54LS445			SN74LS445			UNIT
	MIN	NOM	MAX	MIN	NOM	MAX	
Supply voltage, V_{CC}	4.5	5	5.5	4.75	5	5.25	V
Off-state output voltage, $V_{O(off)}$			7			7	V
Operating free-air temperature, T_A	−55		125	0		70	C

electrical characteristics over recommended operating free-air temperature range (unless otherwise noted)

PARAMETER		TEST CONDITIONS†		SN54LS445			SN74LS445			UNIT
				MIN	TYP‡	MAX	MIN	TYP‡	MAX	
V_{IH}	High-level input voltage			2			2			V
V_{IL}	Low-level input voltage					0.7			0.8	V
V_{IK}	Input clamp voltage	V_{CC} = MIN,	I_I = −18 mA			−1.5			−1.5	V
$I_{O(off)}$	Off-state output current	V_{CC} = MIN, V_{IL} = V_{IL} max,	V_{IH} = 2 V, V_{OH} = 7 V			250			250	μA
$V_{O(on)}$	On-state output voltage	V_{CC} = MIN, V_{IH} = 2 V, V_{IL} = V_{IL} max	I_{OL} = 12 mA		0.25	0.4		0.25	0.4	V
			I_{OL} = 24 mA					0.35	0.5	
			I_{OL} = 80 mA					2.3	3	
I_I	Input current at maximum input voltage	V_{CC} = MAX,	V_I = 7 V			0.1			0.1	mA
I_{IH}	High-level input current	V_{CC} = MAX,	V_I = 2.7 V			20			20	μA
I_{IL}	Low-level input current	V_{CC} = MAX,	V_I = 0.4 V			−0.4			−0.4	mA
I_{CC}	Supply current	V_{CC} = MAX,	See Note 2		7	13		7	13	mA

†For conditions shown as MIN or MAX, use the appropriate value specified under recommended operating conditions.
‡All typical values are at V_{CC} = 5 V, T_A = 25°C.
NOTE 2: I_{CC} is measured with all inputs grounded and outputs open.

switching characteristics, V_{CC} = 5 V, T_A = 25°C

PARAMETER		TEST CONDITIONS		MIN	MAX	UNIT
t_{PLH}	Propagation delay time, low-to-high-level output	C_L = 45 pF,	R_L = 665 Ω, See Note 3		50	ns
t_{PHL}	Propagation delay time, high-to-low-level output				50	ns

NOTE 3: Load circuits and voltage waveforms are shown in Section 1.

logic symbol†

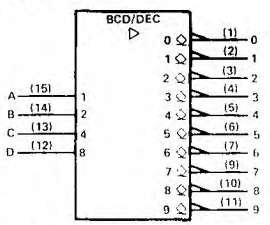

†This symbol is in accordance with ANSI/IEEE Std. 91-1984 and IEC Publication 617-12.
Pin numbers shown are for D, J, and N packages.

schematic of inputs and outputs

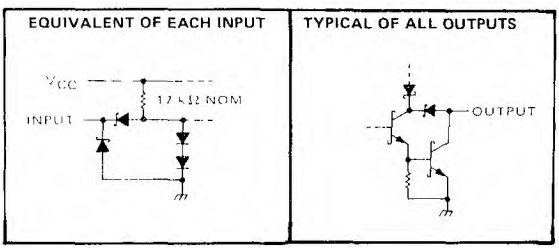

TEXAS INSTRUMENTS
POST OFFICE BOX 655012 • DALLAS, TEXAS 75265

- 3-State Outputs Drive Bus Lines Directly
- P-N-P Inputs Reduce DC Loading on Bus Line
- Hysteresis at Bus Inputs Improves Noise Margins
- Flow-Thru Data Pinout (B Bus Opposite A Bus)
- Choice of True ('LS449) and Inverting ('LS446)

SN54LS446, SN54LS449 . . . J PACKAGE
SN74LS446, SN74LS449 . . . D OR N PACKAGE
(TOP VIEW)

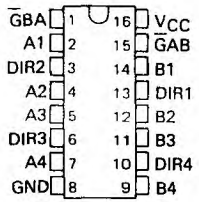

SN54LS446, SN54LS449 . . . FK PACKAGE
(TOP VIEW)

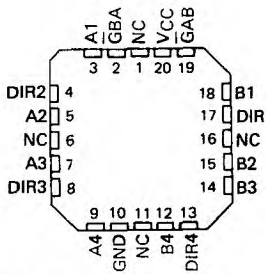

NC - No internal connection

description

These quadruple bus transceivers are designed for data transmission from individual lines of the A bus to individual lines of the B bus or the reverse, depending on the logic levels at the direction-control pins DIR1 through DIR4. These direction controls (one for each channel) allow maximum flexibility in timing. The enable inputs $\overline{G}BA$ and $\overline{G}AB$ can be used to disable the A or B outputs respectively, or to disable both buses for effective isolation.

The SN54LS446 and SN54LS449 are characterized for operation over the full military temperature range of −55°C to 125°C. The SN74LS446 and SN74LS449 are characterized for operation from 0°C to 70°C.

FUNCTION TABLE

ENABLE $\overline{G}BA$	ENABLE $\overline{G}AB$	DIRECTION DIR	OPERATION 'LS446	OPERATION 'LS449
H	H	X	Isolation	Isolation
X	L	H	$\overline{A}$ data to B Bus	A data to B Bus
L	X	L	$\overline{B}$ data to A Bus	B data to A Bus
X	H	H	Isolation	Isolation
H	X	L	Isolation	Isolation

H = high level, L = low level, X = irrelevant

absolute maximum ratings over operating free-air temperature range (unless otherwise noted)

Supply voltage, V_{CC} (see Note 1) . . . . . 7 V
Input voltage . . . . . 7 V
Off-state output voltage . . . . . 5.5 V
Operating free-air temperature range: SN54LS' . . . . . −55°C to 125°C
SN74LS' . . . . . 0°C to 70°C
Storage temperature range . . . . . −65°C to 150°C

NOTE 1: Voltage values are with respect to the network ground terminal.

PRODUCTION DATA documents contain information current as of publication date. Products conform to specifications per the terms of Texas Instruments standard warranty. Production processing does not necessarily include testing of all parameters.

logic symbols†

'LS446

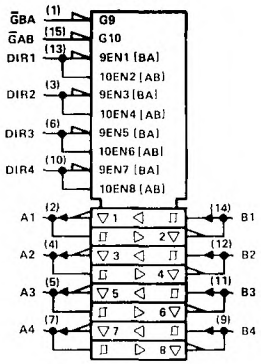

'LS449

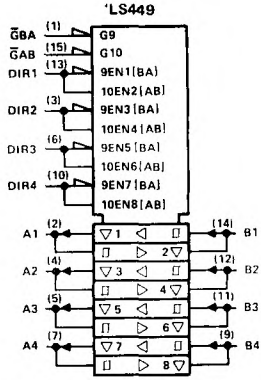

logic diagrams (positive logic)

'LS446

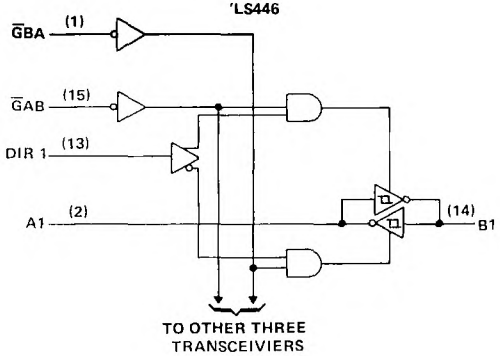

'LS449

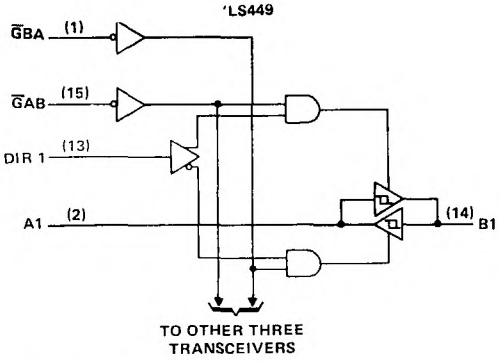

† These symbols are in accordance with ANSI/IEEE Std 91-1984 and IEC Publication 617-12.
Pin numbers shown are for D, J, and N packages.

schematics of inputs and outputs

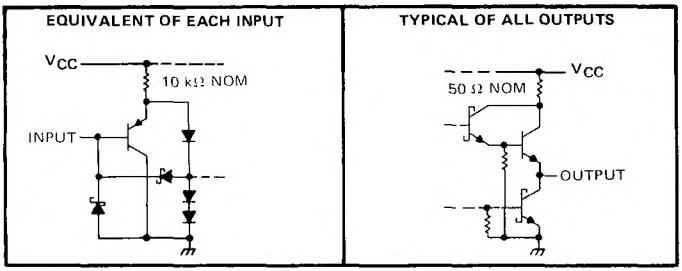

TEXAS INSTRUMENTS
POST OFFICE BOX 655012 • DALLAS, TEXAS 75265

recommended operating conditions

PARAMETER	SN54LS446 SN54LS449			SN74LS446 SN74LS449			UNIT
	MIN	NOM	MAX	MIN	NOM	MAX	
Supply voltage, V_{CC} (see Note 1)	4.5	5	5.5	4.75	5	5.25	V
High-level output current, I_{OH}			−12			−15	mA
Low-level output current, I_{OL}			12			24	mA
Operating free-air temperature, T_A	−55		125	0		70	°C

NOTE 1: Voltage values are with respect to network ground terminal.

electrical characteristics over recommended operating free-air temperature range (unless otherwise noted)

PARAMETER			TEST CONDITIONS†		SN54LS446 SN54LS449			SN74LS446 SN74LS449			UNIT
					MIN	TYP‡	MAX	MIN	TYP‡	MAX	
V_{IH}	High-level input voltage				2			2			V
V_{IL}	Low-level input voltage						0.6			0.7	V
V_{IK}	Input clamp voltage		V_{CC} = MIN,	I_I = −18 mA			−1.5			−1.5	V
	Hysteresis ($V_{T+} - V_{T-}$), A or B input		V_{CC} = MIN		0.1	0.4		0.2	0.4		V
V_{OH}	High-level output voltage		V_{CC} = MIN, V_{IH} = 2 V, V_{IL} = V_{IL} max	I_{OH} = −3 mA	2.4	3.4		2.4	3.4		V
				I_{OH} = MAX	2			2			
V_{OL}	Low-level output voltage		V_{CC} = MIN, V_{IH} = 2 V, V_{IL} = V_{IL} max	I_{OL} = 12 mA		0.25	0.4		0.25	0.4	V
				I_{OL} = 24 mA					0.35	0.5	
I_{OZH}	Off-state output current, high-level voltage applied		V_{CC} = MAX, V_O = 2.7 V	$\overline{G}$ at 2 V,			20			20	µA
I_{OZL}	Off-state output current, low-level voltage applied		V_{CC} = MAX, V_O = 0.4 V	$\overline{G}$ at 2 V,			−0.4			−0.4	mA
I_I	Input current at maximum input voltage	A or B	V_{CC} = MAX,	V_I = 5.5 V			0.1			0.1	mA
		$\overline{G}$AB or $\overline{G}$BA		V_I = 7 V			0.1			0.1	
I_{IH}	High-level input current		V_{CC} = MAX,	V_I = 2.7 V			20			20	µA
I_{IL}	Low-level input current		V_{CC} = MAX,	V_I = 0.4 V			−0.4			−0.4	mA
I_{OS}	Short-circuit output current§		V_{CC} = MAX		−40		−225	−40		−225	mA
I_{CC}	Total supply current	'LS446	V_{CC} = MAX, Outputs open	Outputs high		35	56		35	56	mA
				Outputs low		39	63		39	63	
				Outputs at Hi-Z		42	68		42	68	
		'LS449		Outputs high		42	68		42	68	
				Outputs low		47	75		47	75	
				Outputs at Hi-Z		50	80		50	80	

† For conditions shown as MIN or MAX, use the appropriate value specified under recommended operating conditions.
‡ All typical values are at V_{CC} = 5 V, T_A = 25°C.
§ Not more than one output should be shorted at a time, and duration of the short-circuit should not exceed one second.

switching characteristics at V_{CC} = 5 V, T_A = 25°C

PARAMETER		FROM (INPUT)	TO (OUTPUT)	TEST CONDITIONS	'LS446		'LS449		UNIT
					TYP	MAX	TYP	MAX	
t_{PLH}	Propagation delay time, low-to-high-level output	A	B	C_L = 45 pF, R_L = 667 Ω, See Note 2	8	13	10	15	ns
		B	A		8	13	10	15	
t_{PHL}	Propagation delay time, high-to-low-level output	A	B		7	12	11	17	ns
		B	A		7	12	11	17	
t_{PZL}	Output enable time to low level	$\overline{G}$BA	A		24	40	21	35	ns
		$\overline{G}$AB	B		24	40	21	35	
t_{PZH}	Output enable time to high level	$\overline{G}$BA	A		15	25	18	30	ns
		$\overline{G}$AB	B		15	25	18	30	
t_{PLZ}	Output disable time from low level	$\overline{G}$BA	A	C_L = 5 pF, R_L = 667 Ω, See Note 2	14	25	14	25	ns
		$\overline{G}$AB	B		14	25	14	25	
t_{PHZ}	Output disable time from high level	$\overline{G}$BA	A		10	15	10	15	ns
		$\overline{G}$AB	B		10	15	10	15	

NOTE 2: Load circuits and voltage waveforms are shown in Section 1.

TEXAS INSTRUMENTS
POST OFFICE BOX 655012 • DALLAS, TEXAS 75265

D2631, JANUARY 1981 – REVISED MARCH 1988

- Mechanically and Functionally Interchangeable With DM71/81LS95 thru DM71/81LS98
- P-N-P Inputs Reduce Bus Loading
- 3-State Outputs Rated at I_{OL} of 12 mA and 24 mA for 54LS and 74LS, Respectively

DEVICE	DATA PATH
'LS465	True
'LS466	Inverting
'LS467	True
'LS468	Inverting

description

These octal buffers utilize the latest low-power Schottky technology. The 'LS465 and 'LS466 have a two-input active-low AND enable gate controlling all eight data buffers. The 'LS467 and 'LS468 have two separate active-low enable inputs each controlling four data buffers. In either case, a high level on any $\overline{G}$ places the affected outputs at high impedance.

schematics of inputs and outputs

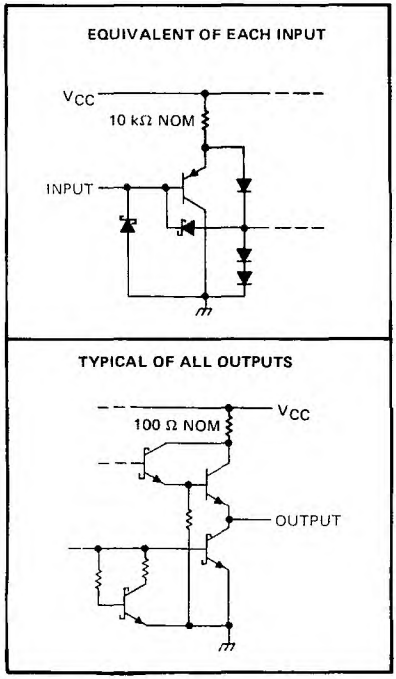

SN54LS465 AND SN54LS466 . . . J PACKAGE
SN74LS465 AND SN74LS466 . . . DW OR N PACKAGE
(TOP VIEW)

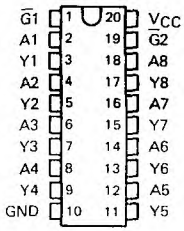

SN54LS465 AND SN54LS466 . . . FK PACKAGE
(TOP VIEW)

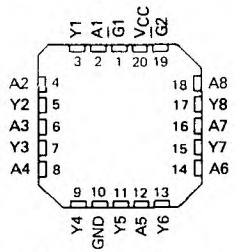

SN54LS467 AND SN54LS468 . . . J PACKAGE
SN74LS467 AND SN74LS468 . . . DW OR N PACKAGE
(TOP VIEW)

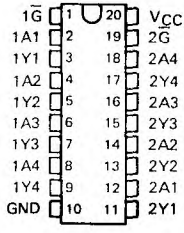

SN54LS467 AND SN54LS468 . . . FK PACKAGE
(TOP VIEW)

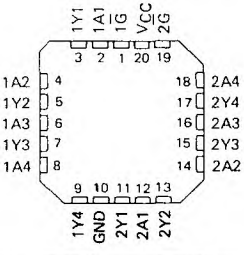

PRODUCTION DATA documents contain information current as of publication date. Products conform to specifications per the terms of Texas Instruments standard warranty. Production processing does not necessarily include testing of all parameters.

logic diagrams (positive logic)

'LS465

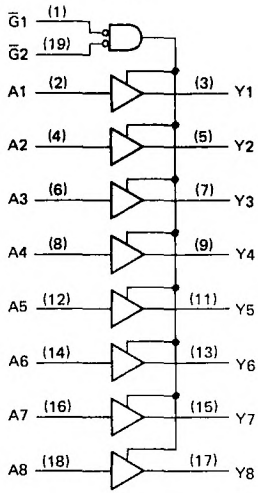

'LS466

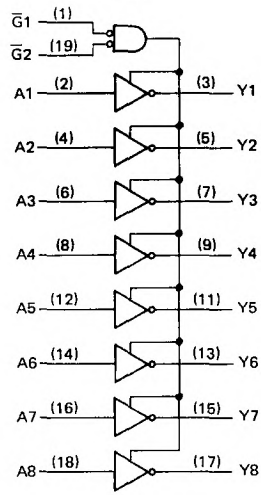

'LS467

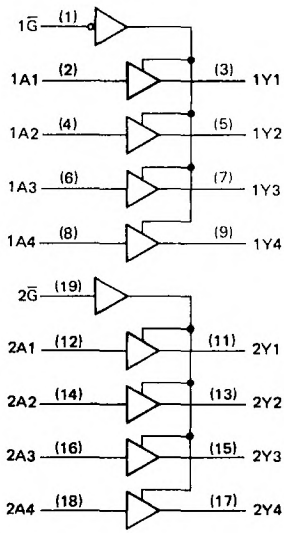

'LS468

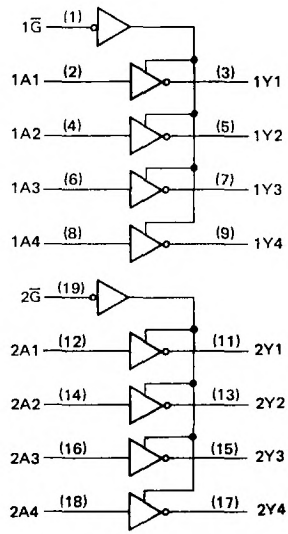

Pin numbers shown are for DW, J, and N packages.

logic symbols†

'LS465

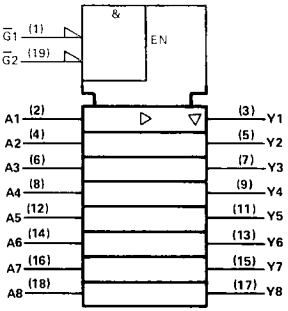

'LS466

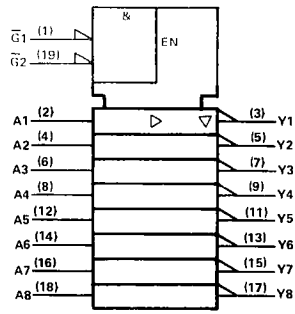

'LS467

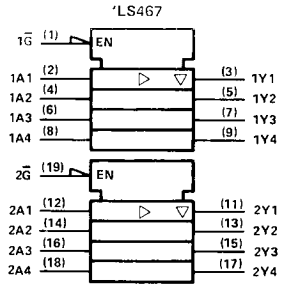

'LS468

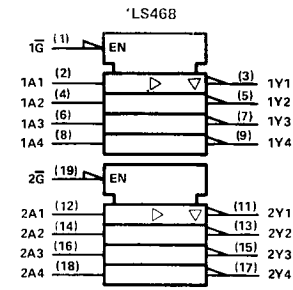

†These symbols are in accordance with ANSI/IEEE Std. 91-1984 and IEC Publication 617-12.
Pin numbers shown are for DW, J, and N packages.

absolute maximum ratings over operating free-air temperature range (unless otherwise noted)

Supply voltage, V_{CC} (see Note 1) . . . . . 7 V
Input voltage . . . . . 7 V
Off-state output voltage . . . . . 5.5 V
Operating free-air temperature range: SN54LS465 thru SN54LS468 . . . . . −55°C to 125°C
SN74LS465 thru SN74LS468 . . . . . 0°C to 70°C
Storage temperature range . . . . . −65°C to 150°C

NOTE 1: Voltage values are with respect to the network ground terminal.

recommended operating conditions

	SN54LS'			SN74LS'			UNIT
	MIN	NOM	MAX	MIN	NOM	MAX	
Supply voltage, V_{CC}	4.5	5	5.5	4.75	5	5.25	V
High-level output current, I_{OH}			−1			−2.6	mA
Low-level output current, I_{OL}			12			24	mA
Operating free-air temperature, T_A	−55		125	0		70	°C

electrical characteristics over recommended operating free-air temperature range (unless otherwise noted)

PARAMETER			TEST CONDITIONS†		'LS465, 'LS467			'LS466, 'LS468			UNIT
					MIN	TYP‡	MAX	MIN	TYP‡	MAX	
V_{IH}	High-level input voltage				2			2			V
V_{IL}	Low-level input voltage						0.7			0.8	V
V_{IK}	Input clamp voltage		V_{CC} = MIN, I_I = −18 mA				−1.5			−1.5	V
V_{OH}	High-level output voltage		V_{CC} = MIN, V_{IH} = 2 V, V_{IL} = V_{IL} max	I_{OH} = −1 mA	2.4	3.3					V
				I_{OH} = −2.6 mA				2.4	3.1		
V_{OL}	Low-level output voltage		V_{CC} = MIN, V_{IH} = 2 V, V_{IL} = V_{IL} max	I_{OL} = 12 mA		0.25	0.4		0.25	0.4	V
				I_{OL} = 24 mA					0.35	0.5	
I_{OZH}	Off-state output current, high-level voltage applied		V_{CC} = MAX, V_{IH} = 2 V, V_{IL} = V_{IL} max, V_O = 2.7 V				20			20	μA
I_{OZL}	Off-state output current, low-level voltage applied		V_{CC} = MAX, V_{IH} = 2 V, V_{IL} = V_{IL} max, V_O = 0.4 V				−20			−20	μA
I_I	Input current at maximum input voltage		V_{CC} = MAX, V_I = 7 V				0.1			0.1	mA
I_{IH}	High-level input current		V_{CC} = MAX, V_I = 2.7 V				20			20	μA
I_{IL}	Low-level input current		V_{CC} = MAX, V_I = 0.4 V				−0.2			−0.2	mA
I_{OS}	Short-circuit output current§		V_{CC} = MAX, V_O = 0 V		−30		−130	−30		−130	mA
I_{CC}	Supply current	'LS465, 'LS467	V_{CC} = MAX	Outputs low		19	32		19	32	mA
				Outputs high		13	22		13	22	
				Output Hi-Z		22	37		22	37	
		'LS466, 'LS468		Outputs low		14	23		14	23	
				Outputs high		6	10		6	10	
				Outputs Hi-Z		17	28		17	28	

† For conditions shown as MIN or MAX, use the appropriate value specified under recommended operating conditions.
‡ All typical values are at V_{CC} = 5 V, T_A = 25°C.
§ Not more than one output should be shorted at a time, and duration of the short-circuit should not exceed one second.

switching characteristics, V_{CC} = 5 V, T_A = 25°C, see note 2

PARAMETER	FROM (INPUT)	TO (OUTPUT)	TEST CONDITIONS	'LS465, 'LS467			'LS466, 'LS468			UNIT
				MIN	TYP	MAX	MIN	TYP	MAX	
t_{PLH}	Ai	Yi	R_L = 667 Ω, C_L = 45 pF		9	15		7	12	ns
t_{PHL}	Ai	Yi			12	18		9	15	ns
t_{PZH}	$\overline{G}$ ↓	Y			25	40		25	40	ns
t_{PZL}	$\overline{G}$ ↓	Y			29	45		29	45	ns
t_{PHZ}	$\overline{G}$ ↑	Y	R_L = 667 Ω, C_L = 5 pF		25	40		25	40	ns
t_{PLZ}	$\overline{G}$ ↑	Y			30	45		30	45	ns

NOTE 2: Load circuits and voltage waveforms are shown in Section 1.

TEXAS INSTRUMENTS
POST OFFICE BOX 655012 • DALLAS, TEXAS 75265

OCTOBER 1976 – REVISED MARCH 1988

- Dual Versions of Popular SN54LS90 and SN74LS90 Counters
- Individual Clock, Direct Clear, and Set-to-9 Inputs for Each Decade Counter
- Dual Counters Can Significantly Improve System Densities as Package Count Can Be Reduced by 50%
- Maximum Count Frequency . . . 35 MHz Typical
- Buffered Outputs Reduce Possibility of Collector Commutation

SN54LS490 . . . J OR W PACKAGE
SN74LS490 . . . D, J OR N PACKAGE
(TOP VIEW)

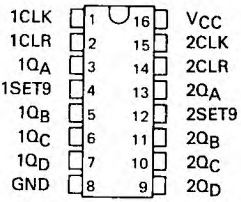

SN54LS490 . . . FK PACKAGE
(TOP VIEW)

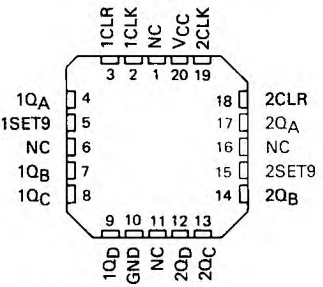

NC - No internal connection

description

Each of these monolithic circuits contains eight master-slave flip-flops and additional gating to implement two individual 4-bit decade counters in a single package. Each decade counter has individual clock, clear, and set-to-9 inputs. BCD count sequences of any length up to divide-by-100 may be implemented with a single 'LS490. Buffering on each output is provided to ensure that susceptibility to collector commutation is reduced significantly. All inputs are diode-clamped to reduce the effects of line ringing. The counters have parallel outputs from each counter stage so that submultiples of the input count frequency are available for system timing signals.

The SN54LS490 is characterized for operation over the full military temperature range of −55°C to 125°C; the SN74LS490 is characterized for use in industrial systems operating from 0°C to 70°C.

logic symbol†

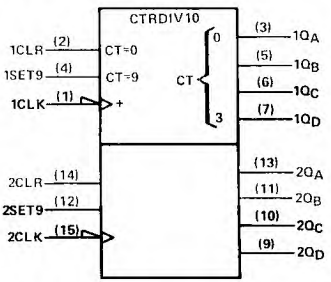

†This symbol is in accordance with ANSI/IEEE Std. 91-1984 and IEC Publication 617-12.
Pin numbers shown are for D, J, N, and W packages.

BCD COUNT SEQUENCE
(EACH COUNTER)

COUNT	OUTPUT			
	Q_D	Q_C	Q_B	Q_A
0	L	L	L	L
1	L	L	L	H
2	L	L	H	L
3	L	L	H	H
4	L	H	L	L
5	L	H	L	H
6	L	H	H	L
7	L	H	H	H
8	H	L	L	L
9	H	L	L	H

CLEAR/SET-TO-9
FUNCTION TABLE
(EACH COUNTER)

INPUTS		OUTPUTS			
CLEAR	SET-TO-9	Q_A	Q_B	Q_C	Q_D
H	L	L	L	L	L
L	H	H	L	L	H
L	L	COUNT			

H = high level, L = low level

PRODUCTION DATA documents contain information current as of publication date. Products conform to specifications per the terms of Texas Instruments standard warranty. Production processing does not necessarily include testing of all parameters.

schematics of inputs and outputs

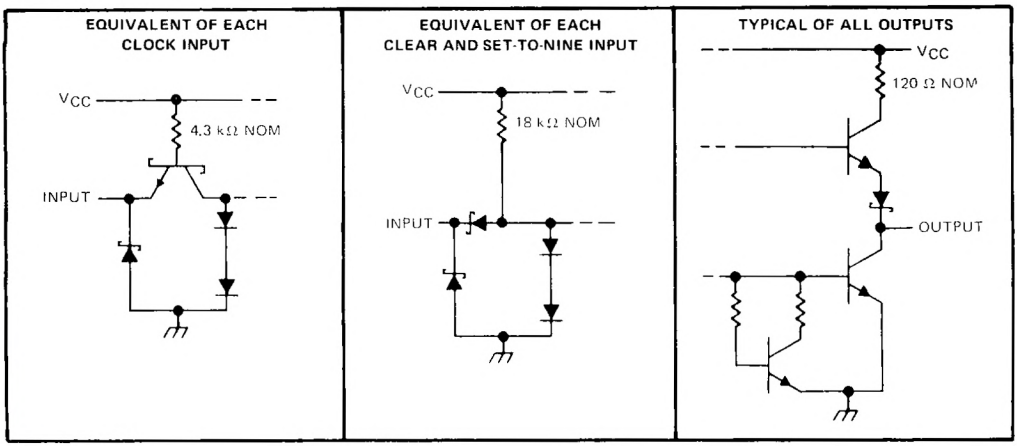

logic diagram (each counter)

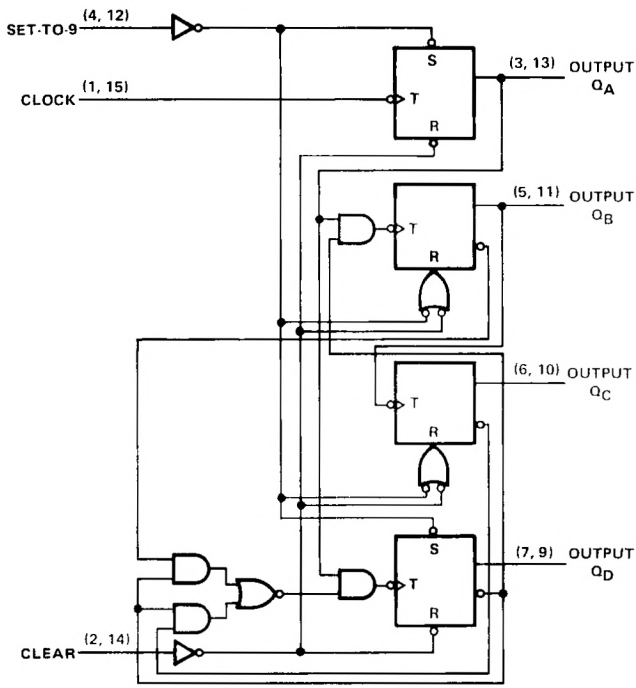

Pin numbers shown are for D, J, N, and W packages.

TEXAS INSTRUMENTS
POST OFFICE BOX 655012 • DALLAS, TEXAS 75265

absolute maximum ratings over operating free-air temperature range (unless otherwise noted)

Supply voltage, V_{CC} (see Note 1) . . . . . 7 V
Clear and set-to-9 input voltage . . . . . 7 V
Clock input voltage . . . . . 5.5 V
Operating free-air temperature range: SN54LS490 . . . . . −55°C to 125°C
SN74LS490 . . . . . 0°C to 70°C
Storage temperature range . . . . . −65°C to 150°C

NOTE 1: Voltage values are with respect to network ground terminal.

recommended operating conditions

	SN54LS490			SN74LS490			UNIT
	MIN	NOM	MAX	MIN	NOM	MAX	
Supply voltage, V_{CC}	4.5	5	5.5	4.75	5	5.25	V
High-level output current, I_{OH}			−400			−400	μA
Low-level output current, I_{OL}			4			8	mA
Count frequency, f_{count}	0		25	0		25	MHz
Pulse width, t_w (any input)	20			20			ns
Clear or set-to-9 inactive-state setup time, t_{su}	25↓			25↓			ns
Operating free-air temperature, T_A	−55		125	0		70	°C

↓The arrow indicates that the falling edge of the clock pulse is used for reference

electrical characteristics over recommended operating free-air temperature range (unless otherwise noted)

PARAMETER			TEST CONDITIONS†		SN54LS490			SN74LS490			UNIT
					MIN	TYP‡	MAX	MIN	TYP‡	MAX	
V_{IH}	High-level input voltage				2			2			V
V_{IL}	Low-level input voltage						0.7			0.8	V
V_{IK}	Input clamp voltage		V_{CC} = MIN,	I_I = −18 mA			−1.5			−1.5	V
V_{OH}	High-level output voltage		V_{CC} = MIN, V_{IL} = V_{IL}max	V_{IH} = 2 V,	2.5	3.4		2.7	3.4		V
V_{OL}	Low-level output voltage		V_{CC} = MIN, V_{IH} = 2 V,	I_{OL} = 4 mA		0.25	0.4		0.25	0.4	V
			V_{IL} = V_{IL}max	I_{OL} = 8 mA					0.35	0.5	
I_I	Input current at maximum input voltage	Clear, set-to-9	V_{CC} = MAX,	V_I = 7 V			0.1			0.1	mA
		Clock		V_I = 5.5 V			0.2			0.2	
I_{IH}	High-level input current	Clear, set-to-9	V_{CC} = MAX,	V_I = 2.7 V			20			20	μA
		Clock					100			100	
I_{IL}	Low-level input current	Clear, set-to-9	V_{CC} = MAX,	V_I = 0.4 V			−0.4			−0.4	mA
		Clock					−1.6			−1.6	
I_{OS}	Short-circuit output current§		V_{CC} = MAX		−20		−100	−20		−100	mA
I_{CC}	Supply current		V_{CC} = MAX,	See Note 2		15	26		15	26	mA

†For conditions shown as MIN or MAX, use the appropriate value specified under recommended operating conditions.
‡All typical values are at V_{CC} = 5 V, T_A = 25°C
§Not more than one output should be shorted at a time, and duration of the short-circuit should not exceed one second.
NOTE 2: I_{CC} is measured with all outputs open, both clear inputs grounded following momentary connection to 4.5 V, and all other inputs grounded.

switching characteristics, V_{CC} = 5 V, T_A = 25°C

PARAMETER†	FROM (INPUT)	TO (OUTPUT)	TEST CONDITIONS	MIN	TYP	MAX	UNIT
f_{max}	Clock	Q_A	C_L = 15 pF, R_L = 2 kΩ See Figure 2 and Note 3	25	35		MHz
t_{PLH}	Clock	Q_A			12	20	ns
t_{PHL}					13	20	
t_{PLH}	Clock	Q_B, Q_D			24	39	ns
t_{PHL}					26	39	
t_{PLH}	Clock	Q_C			32	54	ns
t_{PHL}					36	54	
t_{PHL}	Clear	Any			24	39	ns
t_{PLH}	Set-to-9	Q_A, Q_D			24	39	ns
t_{PHL}		Q_B, Q_C			20	36	

†f_{max} = maximum count frequency
t_{PLH} = Propagation delay time, low-to-high-level output
t_{PHL} = Propagation delay time, high-to-low-level output
NOTE 3: Load circuits and voltage waveforms are shown in Section 1.

TEXAS INSTRUMENTS
POST OFFICE BOX 655012 • DALLAS, TEXAS 75265

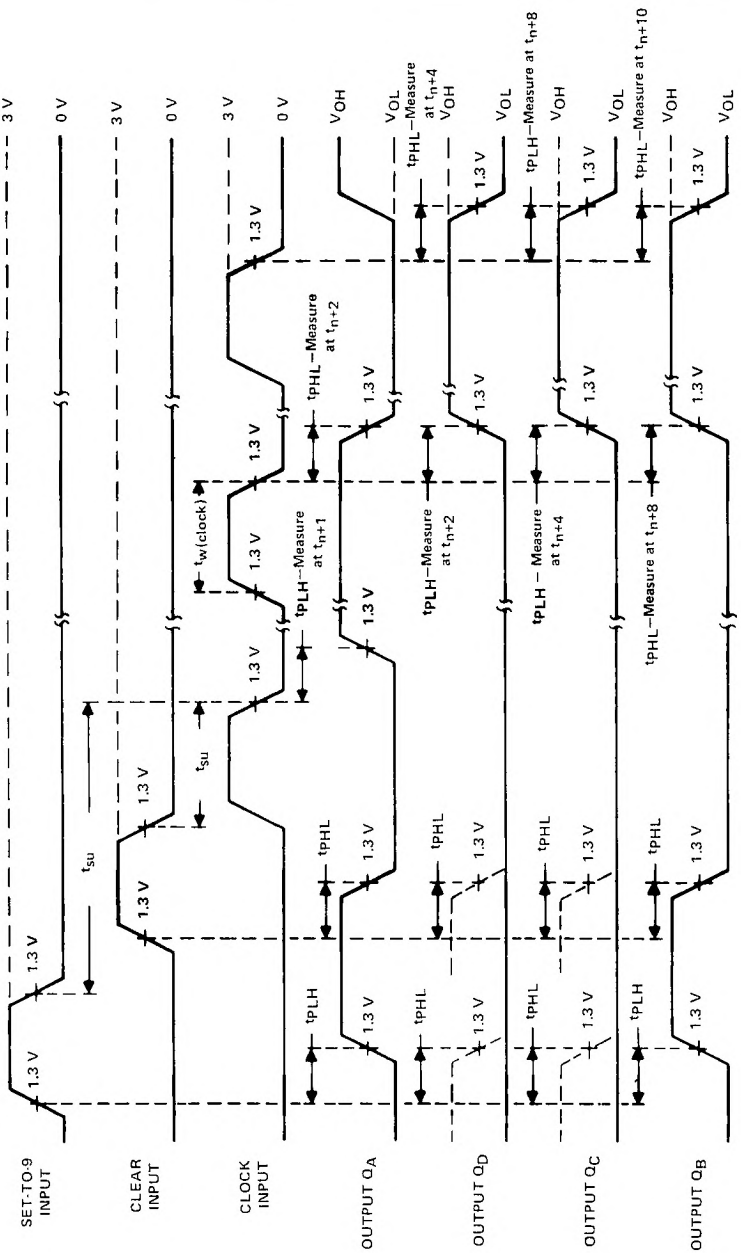

VOLTAGE WAVEFORMS

NOTES: A. Input pulses are supplied by a generator having the following characteristics: $t_r \leq 15$ ns, $t_f \leq 6$ ns, PRR $\leq$ 1 MHz, duty cycle = 50%, $Z_{out} \approx 50$ ohms.

FIGURE 2

- 3-State Outputs Drive Bus Lines or Buffer Memory Address Registers
- P-N-P Inputs Reduce D-C Loading
- Hysteresis at Inputs Improves Noise Margins
- Data Flow-thru Pinout (All Inputs on Opposite Side from Outputs)

SN54LS540, SN54LS541 . . . J OR W PACKAGE
SN74LS540, SN74LS541 . . . DW OR N PACKAGE
(TOP VIEW)

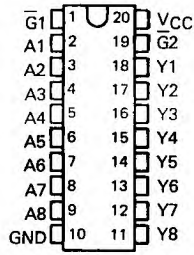

SN54LS540, SN54LS541 . . . FK PACKAGE
(TOP VIEW)

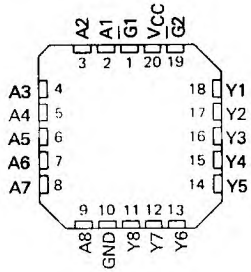

description

These octal buffers and line drivers are designed to have the performance of the popular SN54LS240/SN74LS240 series and, at the same time, offer a pinout having the inputs and outputs on opposite sides of the package. This arrangement greatly enhances printed circuit board layout.

The three-state control gate is a 2-input NOR such that if either $\overline{G1}$ or $\overline{G2}$ are high, all eight outputs are in the high-impedance state.

The 'LS540 offers inverting data and the 'LS541 offers true data at the outputs.

The SN54LS540 and SN54LS541 are characterized for operation over the full military temperature range of −55°C to 125°C. The SN74LS540 and SN74LS541 are characterized for operation from 0°C to 70°C.

TYPE	RATED I_{OL} (SINK CURRENT)	RATED I_{OH} (SOURCE CURRENT)	TYPICAL POWER DISSIPATION (ENABLED) 'LS540	'LS541
SN54LS'	12 mA	−12 mA	92.5 mW	120 mW
SN74LS'	24 mA	−15 mA	92.5 mW	120 mW

schematics of inputs and outputs

EQUIVALENT OF EACH INPUT

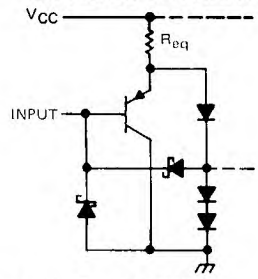

Enable Inputs: R_{eq} = 9 kΩ NOM
All Other Inputs: R_{eq} = 10 kΩ NOM

TYPICAL OF ALL OUTPUTS

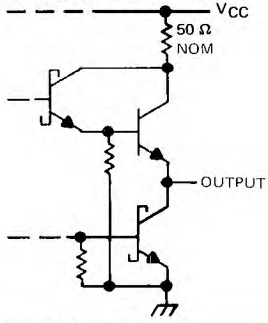

PRODUCTION DATA documents contain information current as of publication date. Products conform to specifications per the terms of Texas Instruments standard warranty. Production processing does not necessarily include testing of all parameters.

logic symbols†

'LS540

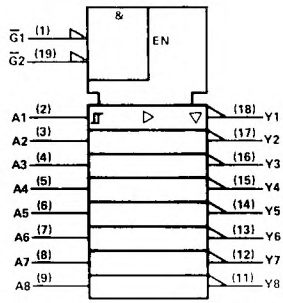

'LS541

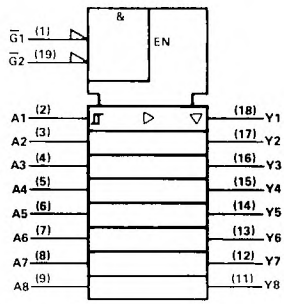

† These symbols are in accordance with ANSI/IEEE Std 91-1984 and IEC Publication 617-12.

logic diagram (positive logic)

'LS540

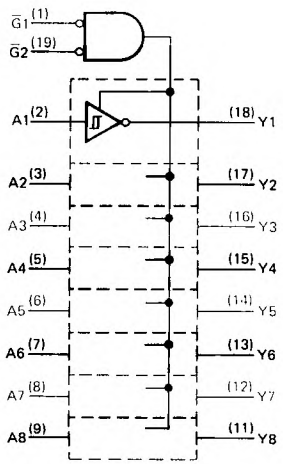

'LS541

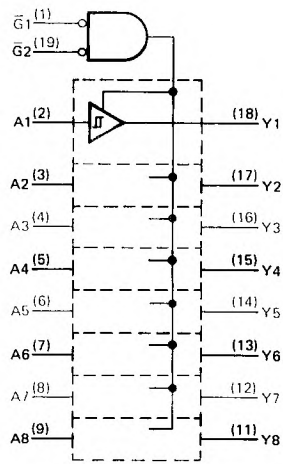

absolute maximum ratings over operating free-air temperature range (unless otherwise noted)

Supply voltage, V_{CC} (see Note 1) . . . . . 7 V
Input voltage . . . . . 7 V
Operating free-air temperature range: SN54LS540, SN54LS541 . . . . . −55°C to 125°C
SN74LS540, SN74LS541 . . . . . 0°C to 70°C
Storage temperature range . . . . . −65°C to 150°C

NOTE 1: Voltage values are with respect to the network ground terminal.

TEXAS INSTRUMENTS
POST OFFICE BOX 655012 • DALLAS, TEXAS 75265

recommended operating conditions

PARAMETER	SN54LS'			SN74LS'			UNIT
	MIN	NOM	MAX	MIN	NOM	MAX	
Supply voltage, V_{CC} (see Note 1)	4.5	5	5.5	4.75	5	5.25	V
High-level output current, I_{OH}			−12			−15	mA
Low-level output current, I_{OL}			12			24	mA
Operating free-air temperature, T_A	−55		125	0		70	°C

NOTE 1: Voltage values are with respect to network ground terminal.

electrical characteristics over recommended operating free-air temperature range (unless otherwise noted)

PARAMETER		TEST CONDITIONS†		SN54LS'			SN74LS'			UNIT
				MIN	TYP‡	MAX	MIN	TYP‡	MAX	
V_{IH}	High-level input voltage			2			2			V
V_{IL}	Low-level input voltage					0.6			0.6	V
V_{IK}	Input clamp voltage	V_{CC} = MIN,	I_I = −18 mA			−1.5			−1.5	V
	Hysteresis ($V_{T+} - V_{T-}$)	V_{CC} = MIN		0.2	0.4		0.2	0.4		V
V_{OH}	High-level output voltage	V_{CC} = MIN, V_{IL} = V_{IL} max,	V_{IH} = 2 V, I_{OH} = −3 mA	2.4	3.4		2.4	3.4		V
		V_{CC} = MIN, V_{IL} = 0.5 V,	V_{IH} = 2V, I_{OH} = MAX	2			2			
V_{OL}	Low-level output voltage	V_{CC} = MIN, V_{IH} = 2 V, V_{IL} = V_{IL} max	I_{OL} = 12 mA		0.25	0.4		0.25	0.4	V
			I_{OL} = 24 mA					0.35	0.5	
I_{OZH}	Off-state output current, high-level voltage applied	V_{CC} = MAX, V_{IH} = 2 V, V_{IL} = V_{IL} max	V_O = 2.7 V			20			20	μA
I_{OZL}	Off-state output current, low-level voltage applied		V_O = 0.4 V			−20			−20	
I_I	Input current at maximum input voltage	V_{CC} = MAX,	V_I = 7 V			0.1			0.1	mA
I_{IH}	High-level input current, any input	V_{CC} = MAX,	V_I = 2.7 V			20			20	μA
I_{IL}	Low-level input current	V_{CC} = MAX,	V_I = 0.4 V			−0.2			−0.2	mA
I_{OS}	Short-circuit output current§	V_{CC} = MAX		−40		−225	−40		−225	mA
I_{CC}	Supply current, Outputs high	V_{CC} = MAX, Outputs open	'LS540		13	25		13	25	mA
			'LS541		18	32		18	32	
	Outputs low		'LS540		24	45		24	45	
			'LS541		30	52		30	52	
	All outputs disabled		'LS540		30	52		30	52	
			'LS541		32	55		32	55	

†For conditions shown as MIN or MAX, use the appropriate value specified under recommended operating conditions.
‡All typical values are at V_{CC} = 5 V, T_A = 25°C.
§Not more than one output should be shorted at a time, and duration of the short-circuit should not exceed one second.

switching characteristics, V_{CC} = 5 V, T_A = 25°C

PARAMETER		TEST CONDITIONS	'LS540			'LS541			UNIT
			MIN	TYP	MAX	MIN	TYP	MAX	
t_{PLH}	Propagation delay time, low-to-high-level output	C_L = 45 pF, R_L = 667 Ω, See Note 2		9	15		9	15	ns
t_{PHL}	Propagation delay time, high-to-low-level output			9	15		10	18	ns
t_{PZL}	Output enable time to low level			25	38		25	38	ns
t_{PZH}	Output enable time to high level			15	25		20	32	ns
t_{PLZ}	Output disable time from low level	C_L = 5 pF, R_L = 667 Ω, See Note 2		10	18		10	18	ns
t_{PHZ}	Output disable time from high level			15	25		18	29	ns

NOTE 2: Load circuits and voltage waveforms are shown in Section 1.

TEXAS INSTRUMENTS
POST OFFICE BOX 655012 • DALLAS, TEXAS 75265

D2632, JANUARY 1981 – REVISED MARCH 1988

- **8-Bit Counter with Register**
- **Parallel Register Outputs**
- **Choice of 3-State ('LS590) or Open-Collector ('LS591) Register Outputs**
- **Guaranteed Counter Frequency: DC to 20 MHz**

SN54LS590, SN54LS591 . . . J OR W PACKAGE
SN74LS590, SN74LS591 . . . N PACKAGE
(TOP VIEW)

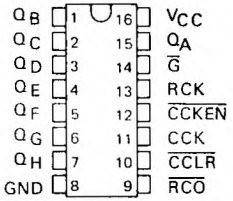

SN54LS590, SN54LS591 . . . FK PACKAGE
(TOP VIEW)

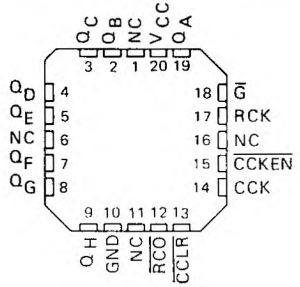

NC – No internal connection

description

These devices each contain an 8-bit binary counter that feeds an 8-bit storage register. The storage register has parallel outputs. Separate clocks are provided for both the binary counter and storage register. The binary counter features a direct clear input ($\overline{CCLR}$) and a count enable input ($\overline{CCKEN}$). For cascading, a ripple carry output ($\overline{RCO}$) is provided. Expansion is easily accomplished for two stages by connecting $\overline{RCO}$ of the first stage to $\overline{CCKEN}$ of the second stage. Cascading for larger count chains can be accomplished by connecting $\overline{RCO}$ of each stage to CCK of the following stage.

Both the counter and register clocks are positive-edge triggered. If the user wishes to connect both clocks together, the counter state will always be one count ahead of the register. Internal circuitry prevents clocking from the clock enable.

schematics of inputs and outputs

EQUIVALENT OF CCK INPUT

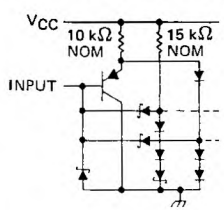

EQUIVALENT OF ALL OTHER INPUTS

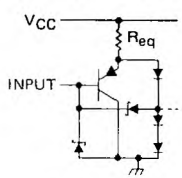

RCK, R_{eq} = 10 kΩ NOM
ALL OTHER: R_{eq} = 13 kΩ NOM

$\overline{RCO}$ OUTPUT

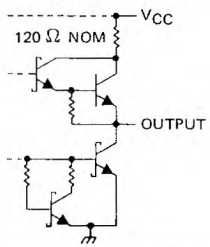

TYPICAL OF Q OUTPUTS ('LS590)

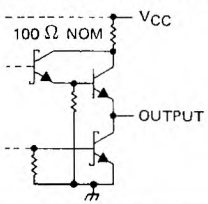

TYPICAL OF Q OUTPUTS ('LS591)

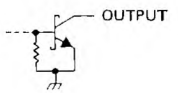

PRODUCTION DATA documents contain information current as of publication date. Products conform to specifications per the terms of Texas Instruments standard warranty. Production processing does not necessarily include testing of all parameters.

logic diagram (positive logic)

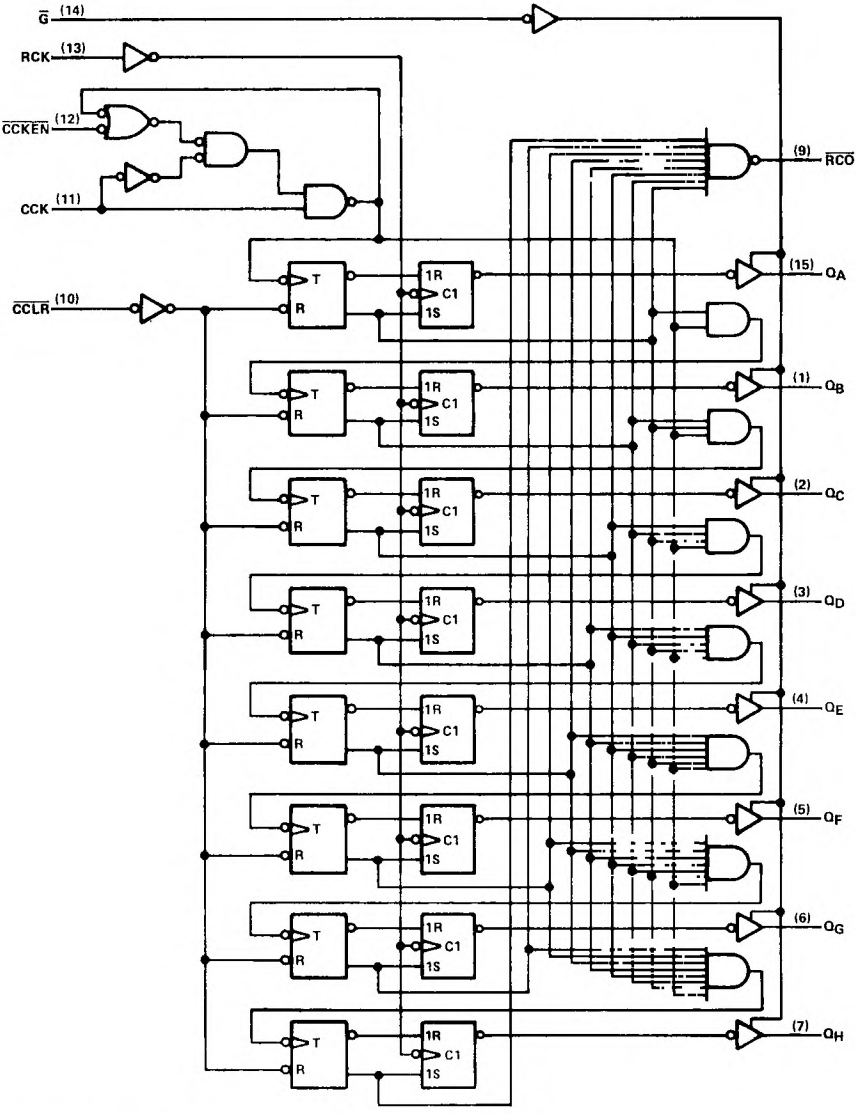

Pin numbers shown are for J, N and W packages.

TEXAS INSTRUMENTS
POST OFFICE BOX 655012 • DALLAS, TEXAS 75265

logic symbols†

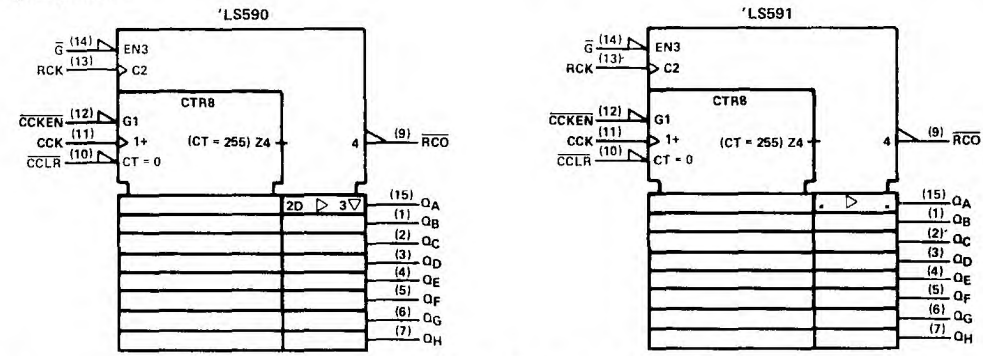

†These symbols are in accordance with ANSI/IEEE Std. 91-1984 and IEC Publication 617-12.
Pin numbers shown are for J, N, and W packages.

absolute maximum ratings over operating free-air temperature range (unless otherwise noted)

Supply voltage, V_{CC} (see Note 1) . . . . . 7 V
Input voltage . . . . . 7 V
Off-state output voltage . . . . . 5.5 V
Operating free-air temperature range: SN54LS590, SN54LS591 . . . . . −55°C to 125°C
SN74LS590, SN74LS591 . . . . . 0°C to 70°C
Storage temperature range . . . . . −65°C to 150°C

NOTE 1: Voltage values are with respect to the network ground terminal.

recommended operating conditions

			SN54LS'			SN74LS'			UNIT
			MIN	NOM	MAX	MIN	NOM	MAX	
V_{CC}	Supply voltage		4.5	5	5.5	4.75	5	5.25	V
V_{IH}	High-level input voltage		2			2			V
V_{IL}	Low-level input voltage				0.7			0.8	V
V_{OH}	High-level output voltage	Q, 'LS591 only			5.5			5.5	V
I_{OH}	High-level output current	$\overline{RCO}$			−1			−1	mA
		Q, 'LS590 only			−1			−2.6	
I_{OL}	Low-level output current	$\overline{RCO}$			8			16	mA
		Q			12			24	
f_{CCK}	Counter clock frequency		0		20	0		20	MHz
f_{RCK}	Register clock frequency		0		25	0		25	MHz
$t_{w(CCK)}$	Duration of counter clock pulse		25			25			ns
$t_{w(\overline{CCLR})}$	Duration of counter clear pulse		20			20			ns
$t_{w(RCK)}$	Duration of register clock pulse		20			20			ns
t_{su}	Setup time	$\overline{CCKEN}$ low before CCK↑	20			20			ns
		$\overline{CCLR}$ inactive before CCK↑	20			20			
		CCK before RCK↑ (see Note 2)	40			40			
t_h	Hold time	$\overline{CC}$ ow after CCK↑	0			0			ns
T_A	Operating free-air temperature		−55		125	0		70	°C

NOTE 2. This setup time ensures the register will see stable data from the counter outputs. The clocks may be tied together in which case the register state will be one clock pulse behind the counter.

electrical characteristics over recommended operating free-air temperature range (unless otherwise noted)

PARAMETER			TEST CONDITIONS†			SN54LS'			SN74LS'			UNIT
						MIN	TYP‡	MAX	MIN	TYP‡	MAX	
V_{IK}			V_{CC} = MIN, I_I = −18 mA					−1.5			−1.5	V
V_{OH}	'LS590 Q		V_{CC} = MIN, V_{IH} = 2 V, V_{IL} = MAX		I_{OH} = −1 mA	2.4	3.2					V
					I_{OH} = −2.6 mA				2.4	3.1		
	$\overline{RCO}$				I_{OH} = −1 mA	2.4	3.2		2.4	3.2		
I_{OH}	'LS591 Q		V_{CC} = MIN, V_{IH} = 2 V, V_{IL} = MAX		V_{OH} = 5.5 V			0.1			0.1	mA
V_{OL}	Q		V_{CC} = MIN, V_{IH} = 2 V, V_{IL} = MAX		I_{OL} = 12 mA		0.25	0.4		0.25	0.4	V
					I_{OL} = 24 mA					0.35	0.5	
	$\overline{RCO}$				I_{OL} = 8 mA		0.25	0.4		0.25	0.4	
					I_{OL} = 16 mA					0.35	0.5	
I_{OZH}	'LS590 Q		V_{CC} = MAX, V_{IH} = 2 V, V_O = 2.7 V		V_{IL} = MAX,			20			20	μA
I_{OZL}	'LS590 Q		V_{CC} = MAX, V_{IH} = 2 V, V_O = 0.4 V		V_{IL} = MAX,			−20			−20	μA
I_I			V_{CC} = MAX, V_I = 7 V					0.1			0.1	mA
I_{IH}			V_{CC} = MAX, V_I = 2.7 V					20			20	μA
I_{IL}	CCK		V_{CC} = MAX, V_I = 0.4 V					−0.8			−0.8	mA
	All others							−0.2			−0.2	
I_{OS}§	'LS590 Q		V_{CC} = MAX, V_O = 0 V			−30		−130	−30		−130	mA
	$\overline{RCO}$					−20		−100	−20		−100	
I_{CC}	'LS590	I_{CCH}	V_{CC} = MAX, All possible inputs grounded, All outputs open				33	55		33	55	mA
		I_{CCL}					44	65		44	65	
		I_{CCZ}					46	65		46	65	
	'LS591	I_{CCH}					35	55		35	55	
		I_{CCL}					42	65		42	65	

† For conditions shown as MIN or MAX, use the appropriate value specified under recommended operating conditions.
‡ All typical values are at V_{CC} = 5 V, T_A = 25°C
§ Not more than one output should be shorted at a time and the duration of the short-circuit should not exceed one second.

switching characteristics, V_{CC} = 5 V, T_A = 25°C (see note 3)

PARAMETER	FROM (INPUT)	TO (OUTPUT)	TEST CONDITIONS		'LS590			'LS591			UNIT
					MIN	TYP	MAX	MIN	TYP	MAX	
f_{max}	RCK	Q	R_L = 667 Ω,	C_L = 45 pF	20	35		20	35		MHz
t_{PLH}	CCK↑	$\overline{RCO}$	R_L = 1 kΩ,	C_L = 30 pF		14	22		16	24	ns
t_{PHL}	CCK↑	$\overline{RCO}$				20	30		25	38	ns
t_{PLH}	$\overline{CCLR}$↓	$\overline{RCO}$				30	45		32	48	ns
t_{PLH}	RCK↑	Q	R_L = 667 Ω,	C_L = 45 pF		12	18		25	38	ns
t_{PHL}		Q				22	33		28	42	ns
t_{PZH}		Q				25	38				ns
t_{PZL}	$\overline{G}$↓	Q				30	45				ns
t_{PHZ}	$\overline{G}$↑	Q	R_L = 667 Ω,	C_L = 5 pF		20	30				ns
t_{PLZ}	$\overline{G}$↑	Q				25	38				ns
t_{PLH}	$\overline{G}$↑	Q	R_L = 667 Ω,	C_L = 45 pF					34	50	ns
t_{PHL}	$\overline{G}$↓	Q							32	48	ns

NOTE 3: Load circuits and voltage waveforms are shown in Section 1.

TEXAS INSTRUMENTS
POST OFFICE BOX 655012 • DALLAS, TEXAS 75265

02633, JANUARY 1981 – REVISED MARCH 1988

- **Parallel Register Inputs ('LS592)**
- **Parallel 3-State I/O: Register Inputs/ Counter Outputs ('LS593)**
- **Counter has Direct Overriding Load and Clear**
- **Accurate Counter Frequency: DC to 20 MHz**

description

The 'LS592 comes in a 16-pin package and consists of a parallel input, 8-bit storage register feeding an 8-bit binary counter. Both the register and the counter have individual positive-edge-triggered clocks. In addition, the counter has direct load and clear functions. A low-going $\overline{RCO}$ pulse will be obtained when the counter reaches the hex word FF. Expansion is easily accomplished for two stages by connecting $\overline{RCO}$ of the first stage to $\overline{CCKEN}$ of the second stage. Cascading for larger count chains can be accomplished by connecting $\overline{RCO}$ of each stage to CCK of the following stage.

The 'LS593 comes in a 20-pin package and has all the features of the 'LS592 plus 3-state I/O, which provides parallel counter outputs. The tables below show the operation of the [illegible] (CCKEN, $\overline{CCKEN}$) inputs. A register clock enable [illegible] is also provided.

OUTPUT ENABLE CONTROL ('593 ONLY)

G	$\overline{G}$	A/Q_A thru H/Q_H
L	L	input mode
L	H	input mode
H	L	output mode
H	H	input mode

COUNTER CLOCK ENABLE CONTROL

CCKEN	$\overline{CCKEN}$	EFFECT ON CCK
L	L	Enable
L	H	Disable
H	L	Enable
H	H	Enable

SN54LS592 . . . J OR W PACKAGE
SN74LS592 . . . N PACKAGE
(TOP VIEW)

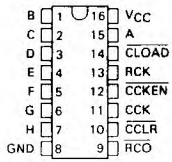

SN54LS592 . . . FK PACKAGE
(TOP VIEW)

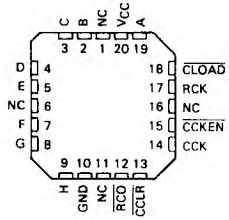

NC — No internal connection

SN54LS593 . . . J OR W PACKAGE
SN74LS593 . . . DW OR N PACKAGE
(TOP VIEW)

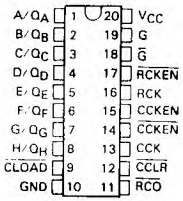

SN54LS593 . . . FK PACKAGE
(TOP VIEW)

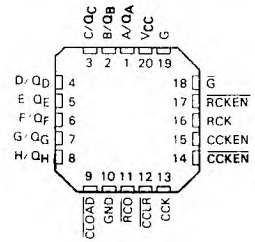

PRODUCTION DATA documents contain information current as of publication date. Products conform to specifications per the terms of Texas Instruments standard warranty. Production processing does not necessarily include testing of all parameters.

schematics of inputs and outputs

EQUIVALENT OF A THRU H INPUTS

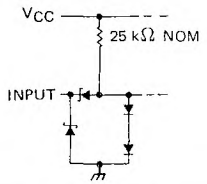

EQUIVALENT OF 'LS592 CCK INPUT AND 'LS593 CCK AND RCK INPUTS

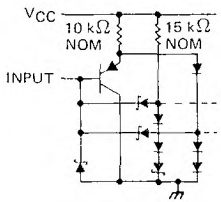

EQUIVALENT OF ALL OTHER INPUTS

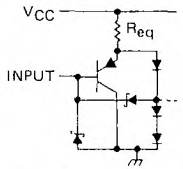

'LS592 RCK R_{eq} = 10 kΩ NOM
ALL OTHER: R_{eq} = 13 kΩ NOM

$\overline{RCO}$ OUTPUT

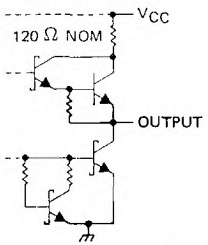

TYPICAL OF Q OUTPUTS ('LS593)

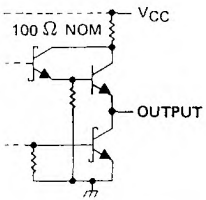

logic symbols†

'LS592

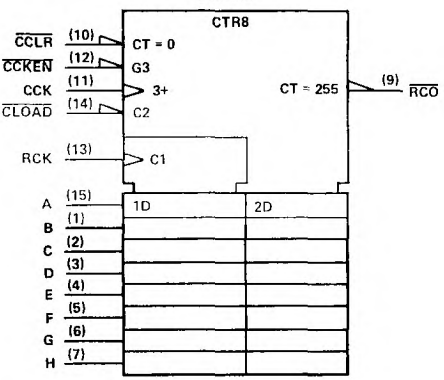

'LS593

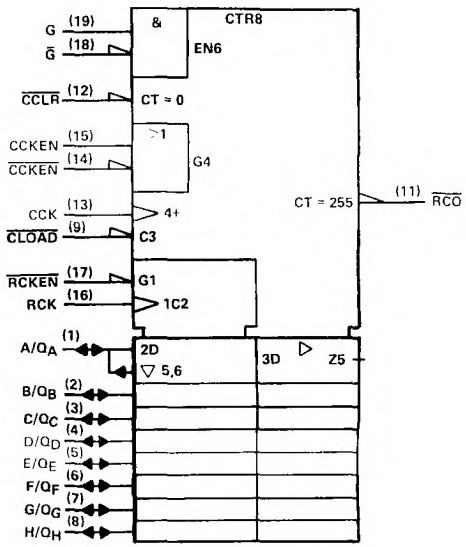

†These symbols are in accordance with ANSI/IEEE Std. 91-1984 and IEC Publication 617-12.
Pin numbers shown are for DW, J, N, and W packages.

TEXAS INSTRUMENTS
POST OFFICE BOX 655012 • DALLAS, TEXAS 75265

logic diagram (positive logic)

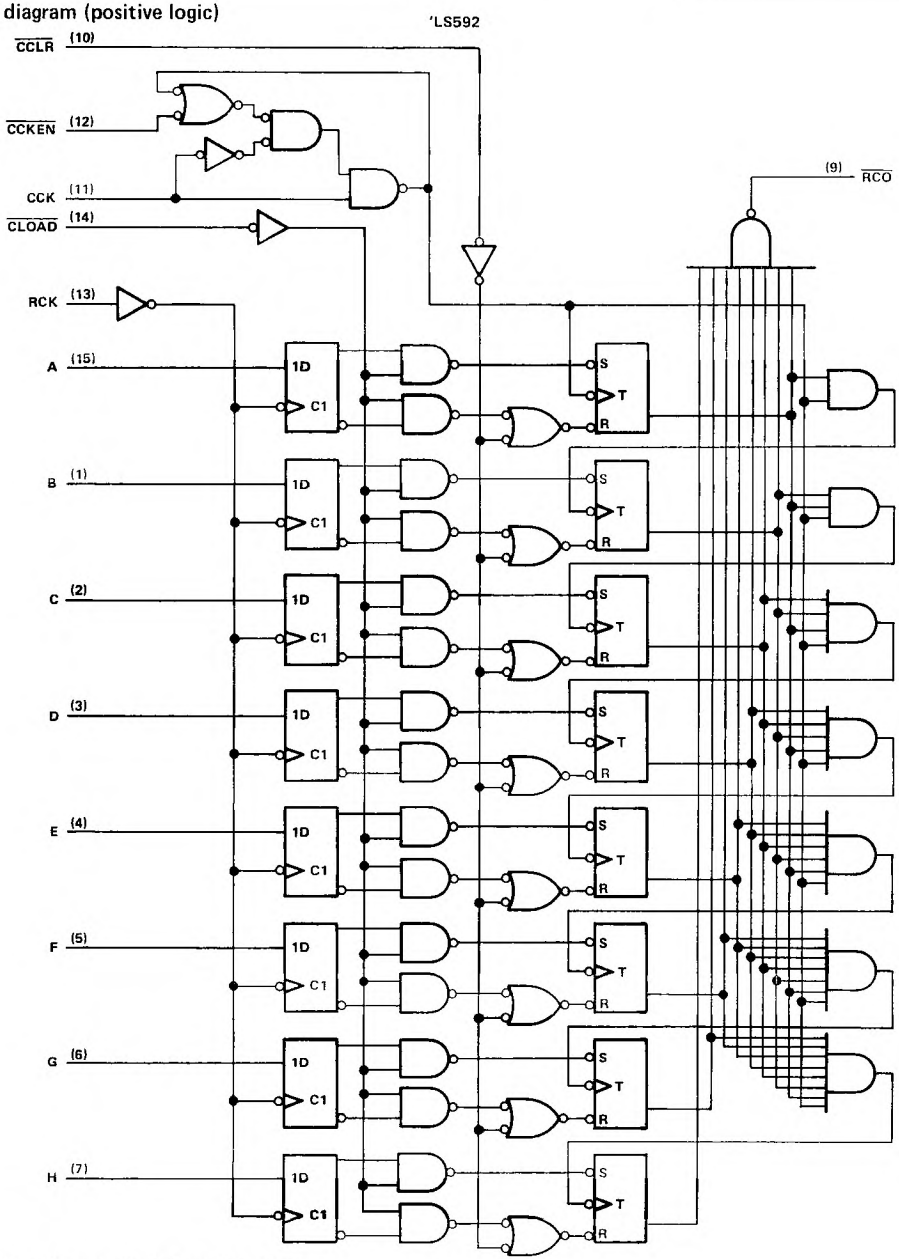

Pin numbers shown are for J, N, and W packages.

logic diagram (positive logic)

'LS593

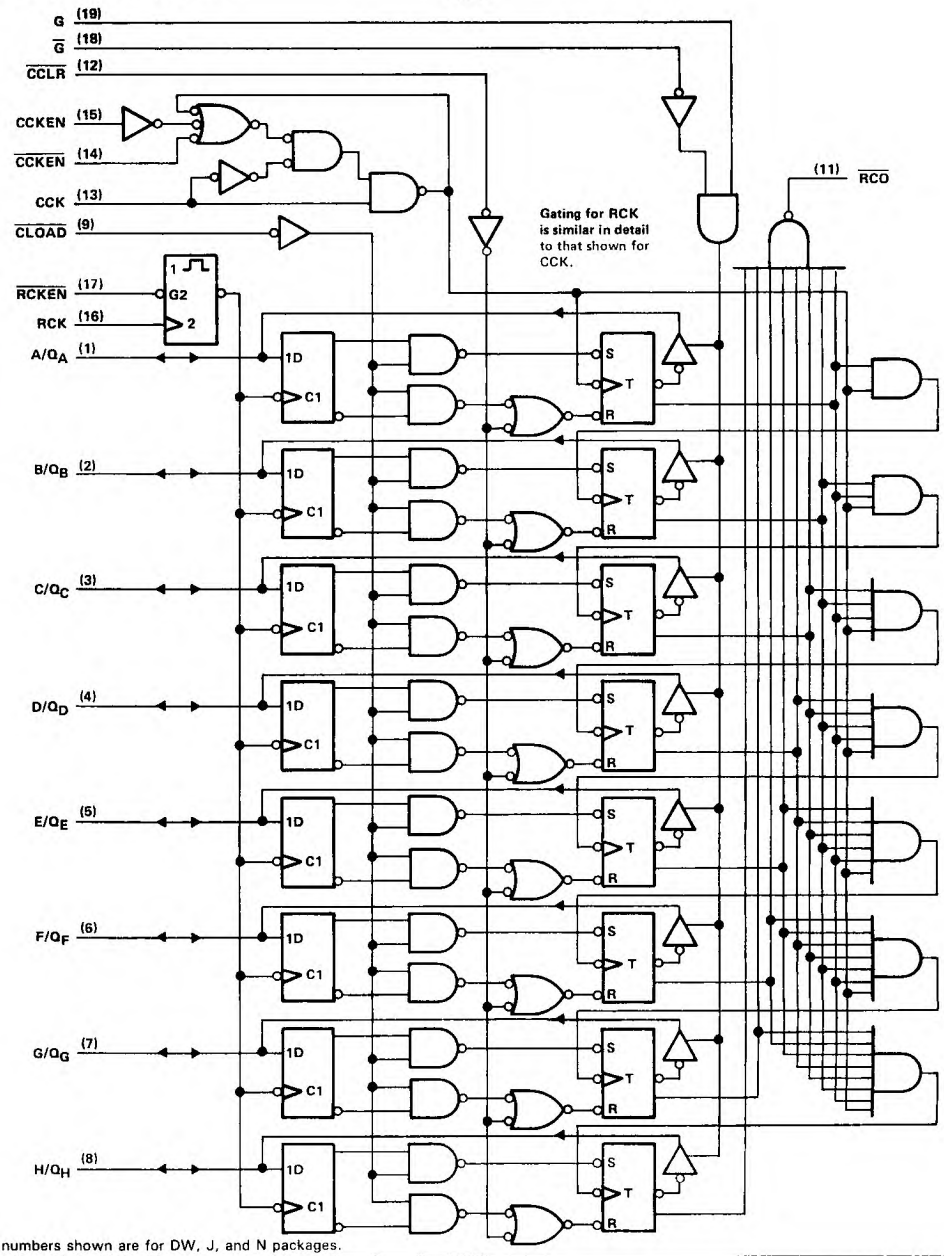

Pin numbers shown are for DW, J, and N packages.

TEXAS INSTRUMENTS
POST OFFICE BOX 655012 • DALLAS, TEXAS 75265

typical operating sequences

'LS592

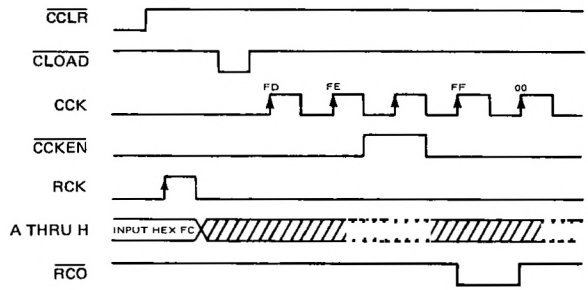

'LS593

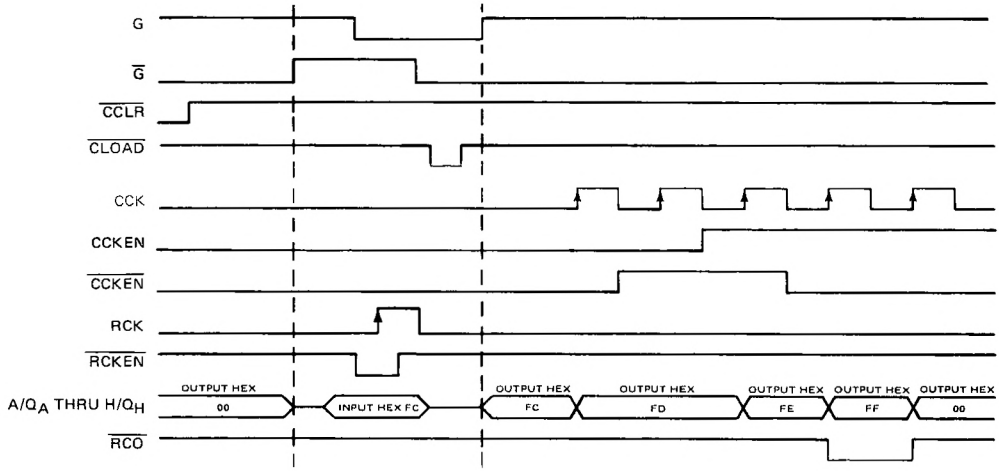

absolute maximum ratings over operating free-air temperature range (unless otherwise noted)

Supply voltage, V_{CC} (see Note 1) . . . . . 7 V
Input voltage (excluding I/O ports) . . . . . 7 V
Off-state output voltage (including I/O ports) . . . . . 5.5 V
Operating free-air temperature range: SN54LS592, SN54LS593 . . . . . −55°C to 125°C
SN74LS592, SN74LS593 . . . . . 0°C to 70°C
Storage temperature range . . . . . −65°C to 150°C

NOTE 1: Voltage values are with respect to the network ground terminal.

recommended operating conditions

			SN54LS'			SN74LS'			UNIT
			MIN	NOM	MAX	MIN	NOM	MAX	
V_{CC}	Supply voltage		4.5	5	5.5	4.75	5	5.25	V
V_{IH}	High-level input voltage		2			2			V
V_{IL}	Low-level input voltage				0.7			0.8	V
I_{OH}	High-level output current	$\overline{RCO}$			−1			−1	mA
		Q 'LS593 only			−1			−2.6	
I_{OL}	Low-level output current	$\overline{RCO}$			8			16	mA
		Q 'LS593 only			12			24	
f_{CCK}	Counter clock frequency		0		20	0		20	MHz
t_w	Duration of counter clock pulse		25			25			ns
t_w ($\overline{R}$)	Duration of counter clear pulse		20			20			ns
t_w (RCK)	Duration of register clock pulse		20			20			ns
t_w ($\overline{CLOAD}$)	Duration of counter load pulse		40			40			ns
t_{su}	Register enable setup time	$\overline{RCKEN}$ low to RCK ↑, 'LS593	20			20			ns
t_{su}	Counter enable setup time before CCK ↑	$\overline{CC}$- ·. ow, ' ..	30			30			ns
		$\overline{CC}$- ·. ow or $\overline{CCKEN}$ high, 'LS593	30			30			
t_{su}	Setup time	inactive before CCK ↑	20			20			ns
		.D inactive before CCK ↑	20			20			
		RCK ↑ before $\overline{CLOAD}$ ↑ (see Note 2)	30			30			
		Data A thru H before RCK ↑	20			20			
t_h	Hold time	Data A thru H after RCK ↑	0			0			ns
		All others	0			0			
T_A	Operating free-air temperature		−55		125	0		70	°C

NOTE 2: This time insures the data saved by RCK ↑ will also be loaded into the counter.

TEXAS INSTRUMENTS
POST OFFICE BOX 655012 • DALLAS, TEXAS 75265

electrical characteristics over recommended operating free-air temperature range (unless otherwise noted)

PARAMETER			TEST CONDITIONS†		SN54LS' MIN	SN54LS' TYP‡	SN54LS' MAX	SN74LS' MIN	SN74LS' TYP‡	SN74LS' MAX	UNIT
V_{IK}			V_{CC} = MIN, I_I = −18 mA				−1.5			−1.5	V
V_{OH}	'LS593 Q		V_{CC} = MIN, V_{IH} = 2 V, V_{IL} = MAX	I_{OH} = −1 mA	2.4	3.2					V
	$\overline{RCO}$			I_{OH} = −2.6 mA				2.4	3.1		
				I_{OH} = −1 mA	2.4	3.2		2.4	3.2		
V_{OL}	'LS593 Q		V_{CC} = MIN, V_{IH} = 2 V, V_{IL} = MAX	I_{OL} = 12 mA		0.25	0.4		0.25	0.4	V
				I_{OL} = 24 mA					0.35	0.5	
	$\overline{RCO}$			I_{OL} = 8 mA		0.25	0.4		0.25	0.4	
				I_{OL} = 16 mA					0.35	0.5	
I_{OZH}	'LS593 Q		V_{CC} = MAX, V_{IH} = 2 V, V_{IL} = MAX, V_O = 2.7 V				20			20	μA
I_{OZL}	'LS593 Q		V_{CC} = MAX, V_{IH} = 2 V, V_{IL} = MAX, V_O = 0.4 V				−0.4			−0.4	mA
I_I	'LS593 Q		V_{CC} = MAX	V_I = 5.5 V			0.1			0.1	mA
	Others			V_I = 7 V			0.1			0.1	
I_{IH}			V_{CC} = MAX, V_I = 2.7 V				20			20	μA
I_{IL}	CCK		V_{CC} = MAX, V_I = 0.4 V				−0.8			−0.8	mA
	RCK	'LS592					−0.2			−0.2	
		'LS593					−0.8			−0.8	
	A thru H						−0.4			−0.4	
	[illegible]						−0.2			−0.2	
I_{OS}§	[illegible]		V_{CC} = MAX, V_O = 0 V		−30		−130	−30		−130	mA
	[illegible]				−20		−100	−20		−100	
I_{CC}	'LS592	I_{CCH}	V_{CC} = MAX, All possible inputs grounded, All outputs open			40	60		40	60	mA
		I_{CCL}				40	60		40	60	
	'LS593	I_{CCH}				47	70		47	70	
		I_{CCL}				53	80		53	80	
		I_{CCZ}				57	85		57	85	

†For conditions shown as MIN or MAX, use the appropriate value specified under recommended operating conditions.
‡All typical values are at V_{CC} = 5 V, T_A = 25°C.
§Not more than one output should be shorted at a time and the duration of the short-circuit should not exceed one second.

switching characteristics, V_{CC} = 5 V, T_A = 25°C, (see note 3)

PARAMETER	FROM (INPUT)	TO (OUTPUT)	TEST CONDITIONS	'[illegible]			'LS593			UNIT
				MIN	TYP	MAX	MIN	TYP	MAX	
f_{max}	CCK	$\overline{RCO}$	R_L = 1 kΩ, C_L = 30 pF	20	35		20	35		MHz
t_{PLH}	CCK↑	Q	R_L = 667 Ω, C_L = 45 pF					14	21	ns
t_{PHL}	CCK↑	Q						26	39	ns
t_{PLH}	$\overline{CLOAD}$↓	Q						34	51	ns
t_{PHL}	$\overline{CLOAD}$↓	Q						28	42	ns
t_{PHL}	$\overline{CCLR}$↓	Q						25	38	ns
t_{PZH}	G↑	$\overline{Q}$						31	47	ns
t_{PZL}	G↑	Q						27	40	ns
t_{PZH}	$\overline{G}$↓	Q						29	45	ns
t_{PZL}	$\overline{G}$↓	Q						31	47	ns
t_{PHZ}	G↓	Q	R_L = 667 Ω, C_L = 5 pF					33	50	ns
t_{PLZ}	G↓	Q						35	52	ns
t_{PHZ}	$\overline{G}$↑	Q						26	39	ns
t_{PLZ}	$\overline{G}$↑	Q						28	42	ns
t_{PLH}	CCK↑	$\overline{RCO}$	R_L = 1 kΩ, C_L = 30 pF		15	23		14	21	ns
t_{PHL}	CCK↑	$\overline{RCO}$			20	30		20	30	ns
t_{PLH}	$\overline{CLOAD}$↓	$\overline{RCO}$			31	47		31	47	ns
t_{PHL}	$\overline{CLOAD}$↓	$\overline{RCO}$			27	41		27	41	ns
t_{PLH}	$\overline{CCLR}$↓	$\overline{RCO}$			30	45		30	45	ns
t_{PLH}	RCK↑	$\overline{RCO}$	R_L = 1 kΩ, C_L = 30 pF		35	53		42	63	ns
t_{PHL}	RCK↑	$\overline{RCO}$	$\overline{CLOAD}$ = L		30	45		33	50	ns

NOTE 3: Load circuits and voltage waveforms are shown in Section 1.

TEXAS INSTRUMENTS
POST OFFICE BOX 655012 • DALLAS, TEXAS 75265

D2747, JUNE 1983 – REVISED MARCH 1988

- **8-Bit Serial-In, Parallel-Out Shift Registers with Storage**
- **Choice of Output Configurations:**
  'LS594 ... Buffered
  'LS599 ... Open-Collector
- **Guaranteed Shift Frequency:**
  DC to 20 MHz
- **Independent Direct-Overriding Clears on Shift and Storage Registers**
- **Independent Clocks for Both Shift and Storage Registers**

SN54LS594, SN54LS599 . . . J OR W PACKAGE
SN74LS594, SN74LS599 . . . N PACKAGE
(TOP VIEW)

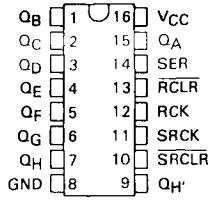

SN54LS594, SN54LS599 . . . FK PACKAGE
(TOP VIEW)

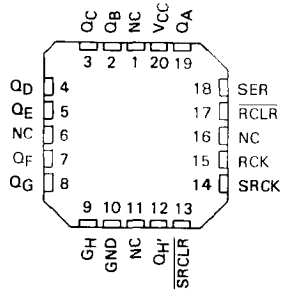

NC — No internal connection

description

These devices each contain an 8-bit D-type storage register. The storage register has buffered ('LS594) or open-collector ('LS599) outputs. Separate clocks and direct-overriding clears are provided on both the shift and storage registers. A shift output (Q_H') is provided for cascading purposes.

Both the shift register and the storage register clocks are positive-edge triggered. If the user wishes to connect both clocks together, the shift register will always be one clock pulse ahead of the storage register.

schematics of inputs and outputs

EQUIVALENT OF SERIAL INPUT

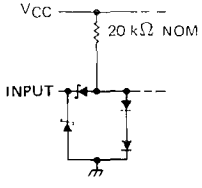

EQUIVALENT OF ALL OTHER INPUTS

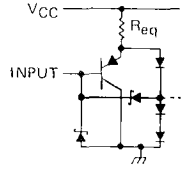

RCK, SRCK: R_{eq} = 10 kΩ NOM
ALL OTHER: R_{eq} = 13 kΩ NOM

TYPICAL OF Q_H' OUTPUTS

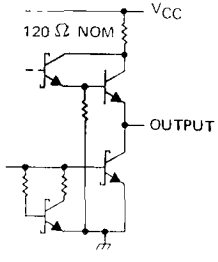

TYPICAL OF ALL OTHER OUTPUTS ('LS594)

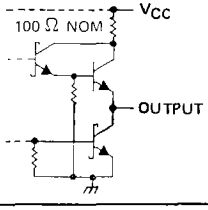

TYPICAL OF ALL OTHER OUTPUTS ('LS599)

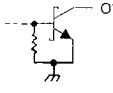

...TION DATA documents contain information ... s of p... ...ion data. Products conform to ...ifications pur... ...e terms of Texas Instruments standard warranty. Production processing does not necessarily include testing of all parameters.

logic diagram (positive logic)

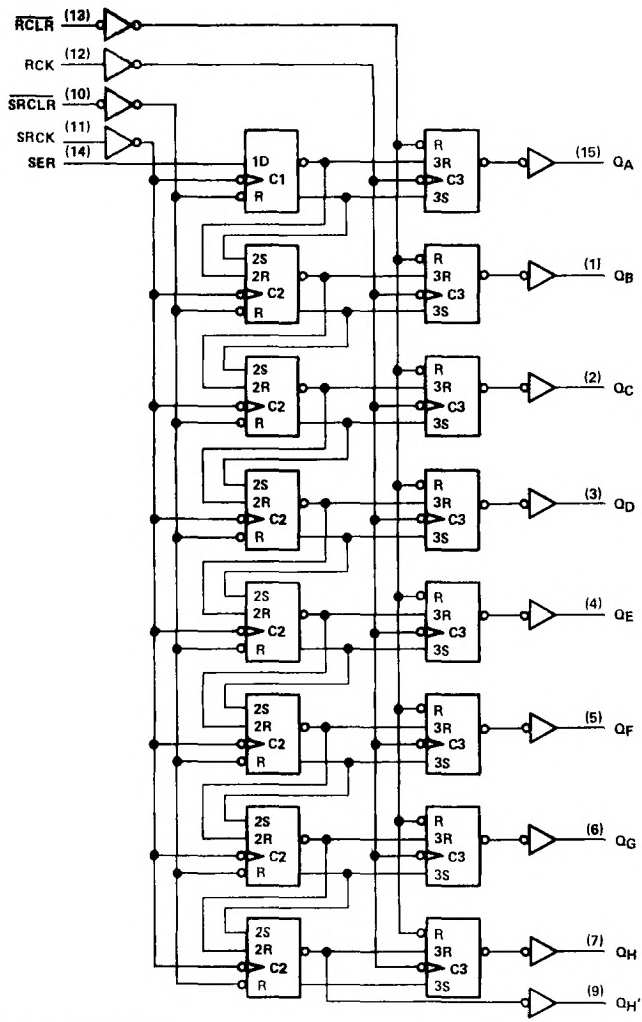

Pin numbers shown are for J, N, and W packages.

TEXAS INSTRUMENTS
POST OFFICE BOX 655012 • DALLAS, TEXAS 75265

logic symbols†

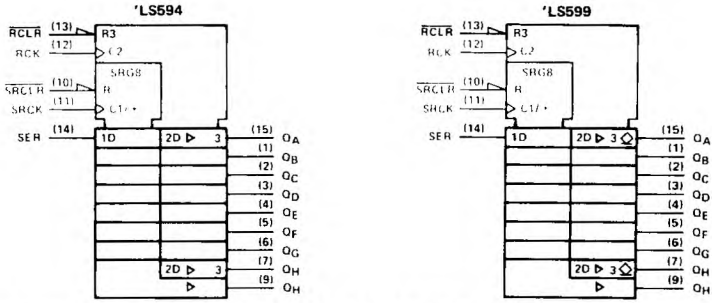

†These symbols are in accordance with ANSI/IEEE Std 91-1984 and IEC Publication 617-12.
Pin numbers shown are for J, N, and W packages.

absolute maximum ratings over operating free-air temperature range (unless otherwise noted)

Supply voltage, V_{CC} (see Note 1) . . . . . 7 V
Input voltage . . . . . 7 V
Off-state output voltage . . . . . 5.5 V
Operating free-air temperature range: SN54LS594, SN54LS599 . . . . . −55°C to 125°C
SN74LS594, SN74LS599 . . . . . 0°C to 70°C
Storage temperature range . . . . . −65°C to 150°C

NOTE 1: Voltage values are with respect to the network ground terminal.

recommended operating conditions

			SN54LS'			SN74LS'			UNIT
			MIN	NOM	MAX	MIN	NOM	MAX	
V_{CC}	Supply voltage		4.5	5	5.5	4.75	5	5.25	V
V_{IH}	High-level input voltage		2			2			V
V_{IL}	Low-level input voltage				0.7			0.8	V
V_{OH}	High-level output voltage	Q_A thru Q_H, 'LS599 only			5.5			5.5	V
I_{OH}	High-level output current	Q_H'			−1			−1	mA
		Q_A thru Q_H, 'LS594 only			−1			−2.6	
I_{OL}	Low-level output current	Q_H'			8			16	mA
		$\overline{Q}$			12			24	
f_{SRCK}	Shift clock frequency		0		20	0		20	MHz
f_{RCK}	Register clock frequency		0		25	0		25	MHz
$t_{w(SRCK)}$	Duration of shift clock pulse		25			25			ns
$t_{w(RCK)}$	Duration of register clock pulse		20			20			ns
$t_{w(SRCLR)}$	Duration of shift clear pulse, low level		20			20			ns
$t_{w(RCLR)}$	Duration of register clear pulse, low level		35			35			ns
t_{su}	Setup time	$\overline{SRCLR}$ inactive before SRCK↑	20			20			ns
		SER before SRCK↑	20			20			
		SRCK↑ before RCK↑ (see Note 2)	40			40			
		$\overline{SRCLR}$ low before RCK↑	40			40			
		SRCLR high before RCK↑	20			20			
t_h	Hold time	SER after SRCK↑	0			0			ns
T_A	Operating free-air temperature		−55		125	0		70	°C

NOTE 2: This setup time ensures the register will see stable data from the shift-register outputs. The clocks may be connected together, in which case the storage register state will be one clock pulse behind the shift register

electrical characteristics over recommended operating free-air temperature range (unless otherwise noted)

PARAMETER		TEST CONDITIONS †			SN54LS'			SN74LS'			UNIT
					MIN	TYP‡	MAX	MIN	TYP‡	MAX	
V_{IK}		V_{CC} = MIN, I_I = −18 mA					−1.5			−1.5	V
V_{OH}	'LS594 Q	V_{CC} = MIN, V_{IH} = 2 V, V_{IL} = MAX		I_{OH} = −1 mA	2.4	3.2					V
	Q_H'			I_{OH} = −2.6 mA				2.4	3.1		
				I_{OH} = −1 mA	2.4	3.2		2.4	3.2		
I_{OH}	'LS599 Q	V_{CC} = MIN, V_{IH} = 2 V, V_{OH} = 5.5 V	V_{IL} = MAX,				0.1			0.1	mA
V_{OL}	Q	V_{CC} = MIN, V_{IH} = 2 V, V_{IL} = MAX		I_{OL} = 12 mA		0.25	0.4		0.25	0.4	V
				I_{OL} = 24 mA					0.35	0.5	
	Q_H'			I_{OL} = 8 mA		0.25	0.4		0.25	0.4	
				I_{OL} = 16 mA						0.5	
I_I		V_{CC} = MAX, V_I = 7 V					0.1			0.1	mA
I_{IH}		V_{CC} = MAX, V_I = 2.7 V					20			20	µA
I_{IL}	SER	V_{CC} = MAX, V_I = 0.4 V					−0.4			−0.4	mA
	All others						−0.2			−0.2	
I_{OS}§	'LS594 Q	V_{CC} = MAX, V_O = 0			−30		−130	−30		−130	mA
	Q_H'				−20		−100	−20		−100	
I_{CCH}	'LS594	V_{CC} = MAX, All possible inputs grounded, All outputs open				34	50		34	50	mA
	'LS599					30	45		30	45	
I_{CCL}	'LS594					42	65		42	65	mA
	'LS599					38	55		38	55	

† For conditions shown as MIN or MAX, use the appropriate value specified under recommended operating conditions.
‡ All typical values are at V_{CC} = 5 V, T_A = 25°C.
§ Not more than one output should be shorted at a time, and duration of the short-circuit should not exceed one second.

switching characteristics, V_{CC} = 5 V, T_A = 25°C, (see note 3)

PARAMETER	FROM (INPUT)	TO (OUTPUT)	TEST CONDITIONS		MIN	TYP	MAX	MIN	TYP	MAX	UNIT
t_{PLH}	SRCK↑	Q_H'	R_L = 1 kΩ,	C_L = 30 pF		12	18		12	18	ns
t_{PHL}						15	23		17	25	ns
t_{PLH}	RCK↑	Q_A thru Q_H	R_L = 667 Ω,	C_L = 45 pF		12	18		28	42	ns
t_{PHL}						20	30		24	35	ns
t_{PHL}	$\overline{SRCLR}$↓	Q_H'	R_L = 1 kΩ,	C_L = 30 pF		22	33		24	35	ns
t_{PHL}	$\overline{RCLR}$↓	Q_A thru Q_H	R_L = 667 Ω,	C_L = 45 pF		38	57		40	60	ns

NOTE 3: Load circuits and voltage waveforms are shown in Section 1.

TEXAS INSTRUMENTS
POST OFFICE BOX 655012 • DALLAS, TEXAS 75265

02634, JANUARY 1981 – REVISED MARCH 1988

- **8-Bit Serial-In, Parallel-Out Shift Registers with Storage**
- **Choice of 3-State ('LS595) or Open-Collector ('LS596) Parallel Outputs**
- **Shift Register Has Direct Clear**
- **Accurate Shift Frequency: DC to 20 MHz**

SN54LS595, SN54LS596 . . . J OR W PACKAGE
SN74LS595, SN74LS596 . . . N PACKAGE
(TOP VIEW)

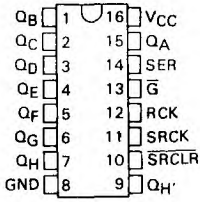

SN54LS595, SN54LS596 . . . FK PACKAGE
(TOP VIEW)

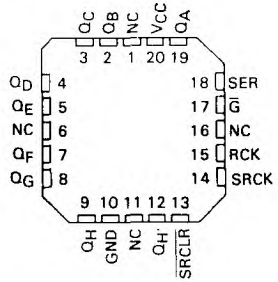

NC – No internal connection

description

These devices each contain an 8-bit serial-in, parallel-out shift register that feeds an 8-bit D-type storage register. The storage register has parallel 3-state ('LS595) or open-collector ('LS596) outputs. Separate clocks are provided for both the shift register and the storage register. The shift register has a direct-overriding clear, serial input, and serial output pins for cascading.

Both the shift register and storage register clocks are positive-edge triggered. If the user wishes to connect both clocks together, the shift register state will always be one clock pulse ahead of the storage register.

schematics of inputs and outputs

EQUIVALENT OF SERIAL INPUT

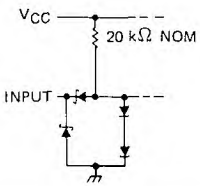

EQUIVALENT OF ALL OTHER INPUTS

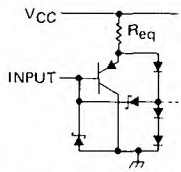

RCK, SRCK: R_{eq} = 10 kΩ NOM
ALL OTHER: R_{eq} = 13 kΩ NOM

TYPICAL OF $Q_{H'}$ OUTPUTS

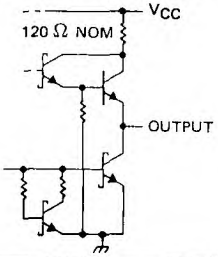

TYPICAL OF ALL OTHER OUTPUTS ('LS595)

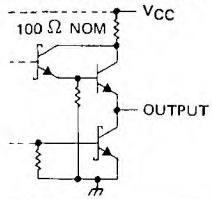

TYPICAL OF ALL OTHER OUTPUTS ('LS596)

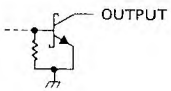

PRODUCTION DATA documents contain information current as of publication date. Products conform to specifications per the terms of Texas Instruments standard warranty. Production processing does not necessarily include testing of all parameters.

logic diagram (positive logic)

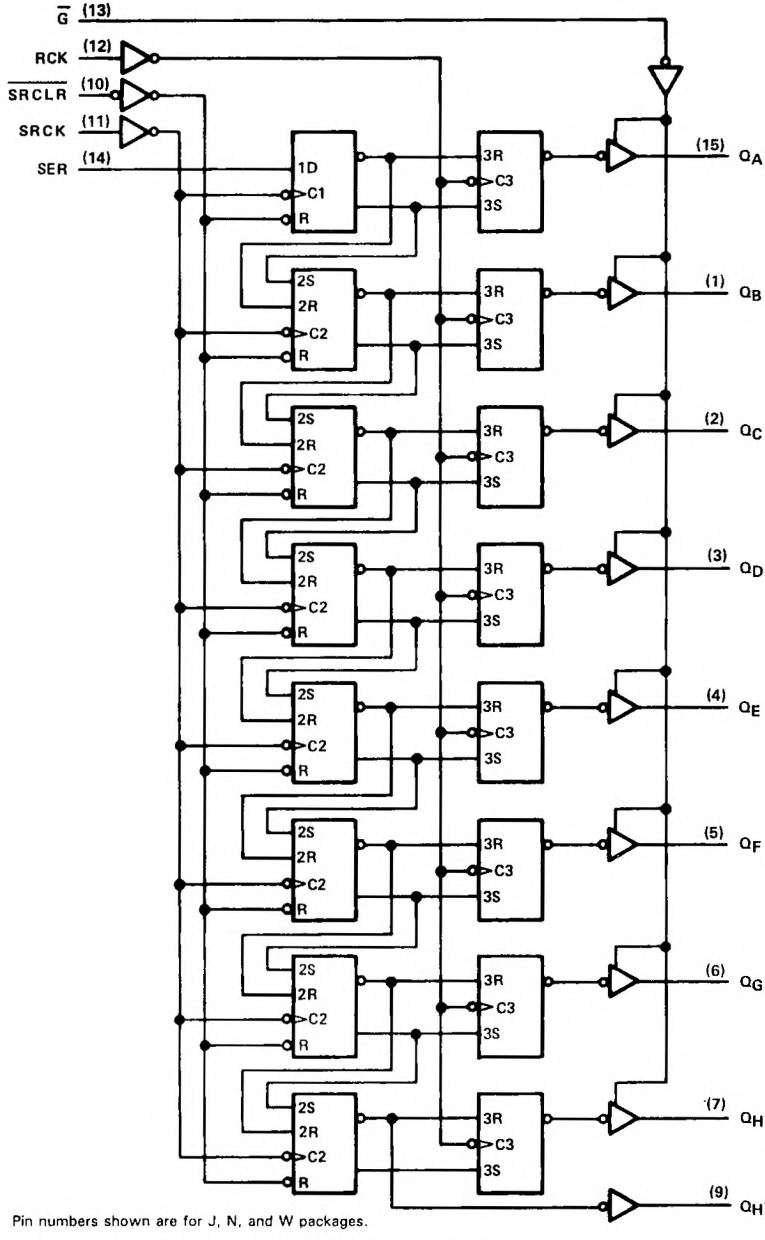

Pin numbers shown are for J, N, and W packages.

TEXAS INSTRUMENTS
POST OFFICE BOX 655012 • DALLAS, TEXAS 75265

logic symbols†

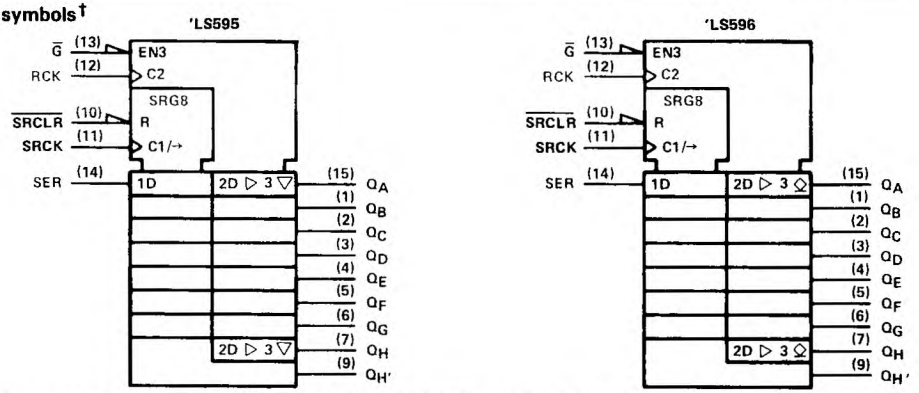

†These symbols are in accordance with ANSI/IEEE Std. 91-1984 and IEC Publication 617-12.
Pin numbers shown are for J, N, and W packages.

absolute maximum ratings over operating free-air temperature range (unless otherwise noted)

Supply voltage, V_{CC} (see Note 1) . . . . . 7 V
Input voltage . . . . . 7 V
Off-state output voltage . . . . . 5.5 V
Operating free-air temperature range: SN54LS595, SN54LS596 . . . . . −55°C to 125°C
SN74LS595, SN74LS596 . . . . . 0°C to 70°C
Storage temperature range . . . . . −65°C to 150°C

NOTE 1: Voltage values are with respect to the network ground terminal.

recommended operating conditions

			SN54LS'			SN74LS'			UNIT
			MIN	NOM	MAX	MIN	NOM	MAX	
V_{CC}	Supply voltage		4.5	5	5.5	4.75	5	5.25	V
V_{IH}	High-level input voltage		2			2			V
V_{IL}	Low-level input voltage				0.7			0.8	V
V_{OH}	High-level output voltage	Q_A thru Q_H, 'LS596 only			5.5			5.5	V
I_{OH}	High-level output current	Q_H'			−1			−1	mA
		Q_A thru Q_H, 'LS595 only			−1			−2.6	
I_{OL}	Low-level output current	Q_H'			8			16	mA
		Q			12			24	
f_{SRCK}	Shift clock frequency		0		20	0		20	MHz
$t_{w(SRCK)}$	Duration of shift clock pulse		25			25			ns
$t_{w(RCK)}$	Duration of register clock pulse		20			20			ns
$t_{w(\overline{SRCLR})}$	Duration of shift clear pulse, low level		20			20			ns
t_{su}	Setup time	$\overline{SRCLR}$ inactive before SRCK ↑	20			20			ns
		SER before SRCK ↑	20			20			
		SRCK ↑ before RCK ↑ (see Note 2)	40			40			
		... $\overline{SRCLR}$ low ... e RCK ↑	40			40			
t_h	Hold time	... $\overline{SRCLR}$ ...ifter S... ↑	0			0			ns
T_A	Operating free-air temperature		−55		125	0		70	°C

NOTE 2: This setup time ensures the register will see stable data from the shift-register outputs. The clocks may be connected together, in which case the storage register state will be one clock pulse behind the shift register.

electrical characteristics over recommended operating free-air temperature range (unless otherwise noted)

PARAMETER		TEST CONDITIONS †		SN54LS'			SN74LS'			UNIT
				MIN	TYP‡	MAX	MIN	TYP‡	MAX	
V_{IK}		V_{CC} = MIN, I_I = −18 mA				−1.5			−1.5	V
V_{OH}	'LS595 Q	V_{CC} = MIN, V_{IH} = 2 V, V_{IL} = MAX	I_{OH} = −1 mA	2.4	3.2					V
	Q_H'		I_{OH} = −2.6 mA				2.4	3.1		
			I_{OH} = −1 mA	2.4	3.2		2.4	3.2		
I_{OH}	'LS596 Q	V_{CC} = MIN, V_{IH} = 2 V, V_{IL} = MAX, V_{OH} = 5.5 V				0.1			0.1	mA
V_{OL}	Q	V_{CC} = MIN, V_{IH} = 2 V, V_{IL} = MAX	I_{OL} = 12 mA		0.25	0.4		0.25	0.4	V
			I_{OL} = 24 mA					0.35	0.5	
	Q_H'		I_{OL} = 8 mA		0.25	0.4		0.25	0.4	
			I_{OL} = 16 mA					0.35	0.5	
I_{OZH}	'LS595 Q	V_{CC} = MAX, V_{IH} = 2 V, V_{IL} = MAX, V_{OH} = 2.7 V				20			20	μA
I_{OZL}	'LS595 Q	V_{CC} = MAX, V_{IH} = 2 V, V_{IL} = MAX, V_{OH} = 0.4 V				−20			−20	μA
I_I		V_{CC} = MAX, V_I = 7 V				0.1			0.1	mA
I_{IH}		V_{CC} = MAX, V_I = 2.7 V				20			20	μA
I_{IL}	SER	V_{CC} = MAX, V_I = 0.4 V				−0.4			−0.4	mA
	All others					−0.2			−0.2	
I_{OS}§	'LS595 Q	V_{CC} = MAX, V_O = 0 V		−30		−130	−30		−130	mA
	Q_H'			−20		−100	−20		−100	
I_{CCH}	'LS595	V_{CC} = MAX, All possible inputs grounded, All outputs open			33	50		33	50	mA
	'LS596				30	45		30	45	
I_{CCL}	'LS595				42	65		42	65	mA
	'LS596				36	55		36	55	
I_{CCZ}	'LS595				44	65		44	65	mA

† For conditions shown as MIN or MAX, use the appropriate value specified under recommended operating conditions.
‡ All typical values are at V_{CC} = 5 V, T_A = 25°C.
§ Not more than one output should be shorted at a time, and duration of the short-circuit should not exceed one second.

TEXAS INSTRUMENTS
POST OFFICE BOX 655012 • DALLAS, TEXAS 75265

switching characteristics, V_{CC} = 5 V, T_A = 25°C (see note 3)

PARAMETER	FROM (INPUT)	TO (OUTPUT)	TEST CONDITIONS	'LS595		[illegible]		UNIT
				TYP	MAX	MIN	MAX	
t_{PLH}	SRCK ↑	Q_H'	R_L = 1kΩ, C_L = 30 pF	12	18	14	21	ns
t_{PHL}				17	25	20	30	ns
t_{PLH}	RCK ↑	Q_A thru Q_H	R_L = 667 Ω, C_L = 45 pF	12	18	28	42	ns
t_{PHL}				24	35	24	35	ns
t_{PZH}	$\overline{G}$ ↓	Q_A thru Q_H		20	30			ns
t_{PZL}				25	38			ns
t_{PHZ}	$\overline{G}$ ↑	Q_A thru Q_H	R_L = 667 Ω, C_L = 5 pF	20	30			ns
t_{PLZ}				25	38			ns
t_{PLH}	$\overline{G}$ ↑	Q_A thru Q_H	R_L = 667 Ω, C_L = 45 pF			40	60	ns
t_{PHL}	$\overline{G}$ ↓	Q_A thru Q_H				25	38	ns
t_{PHL}	$\overline{R}$ ↓	Q_H'	R_L = 1 kΩ, C_L = 30 pF	24	35	24	35	ns

NOTE 3: Load circuits and voltage waveforms are shown in Section 1.

02635, JANUARY 1981 – REVISED MARCH 1988

- **8-Bit Parallel Storage Register Inputs ('LS597)**
- **Parallel 3-State I/O, Storage Register Inputs, Shift Register Outputs ('LS598)**
- **Shift Register has Direct Overriding Load and Clear**
- **Accurate Shift-Frequency . . . DC to 20 MHz**

description

The 'LS597 comes in a 16-pin package and consists of an 8-bit storage latch feeding a parallel-in, serial-out 8-bit shift register. Both the storage register and shift register have positive-edge triggered clocks. The shift register also has direct load (from storage) and clear inputs.

The 'LS598 comes in a 20-pin package and has all the features of the 'LS597 plus 3-state I/O ports that provide parallel shift register outputs and also has multiplexed serial data inputs.

SN54LS597 . . . J OR W PACKAGE
SN74LS597 . . . N PACKAGE
(TOP VIEW)

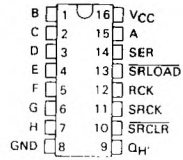

SN54LS597 . . . FK PACKAGE
(TOP VIEW)

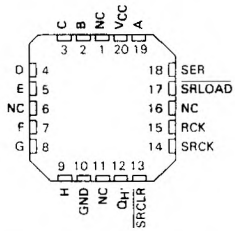

SN54LS598 . . . J OR W PACKAGE
LS598 . . . DW OR N PACKAGE
(TOP VIEW)

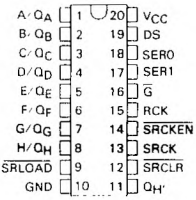

SN54LS598 . . . FK PACKAGE
(TOP VIEW)

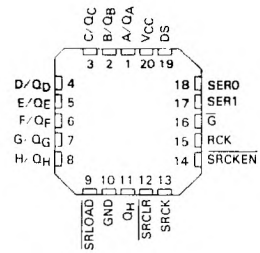

NC – No internal connection

PRODUCTION DATA documents contain information current as of publication date. Products conform to specifications per the terms of Texas Instruments standard warranty. Production processing does not necessarily include testing of all parameters.

schematics of inputs and outputs

EQUIVALENT OF SERIAL AND A THRU H INPUTS

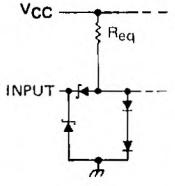

SERIAL: R_{eq} = 20 kΩ NOM
A thru H: R_{eq} = 25 kΩ NOM

EQUIVALENT OF SRCK INPUT ('LS598 ONLY)

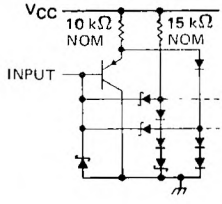

EQUIVALENT OF ALL OTHER INPUTS

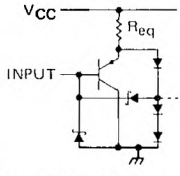

('LS597) RCK, SRCK: R_{eq} = 10 kΩ NOM
('LS598) RCK: R_{eq} = 10 kΩ NOM
ALL OTHER: R_{eq} = 13 kΩ NOM

TYPICAL OF Q_H' OUTPUTS

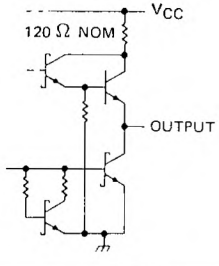

TYPICAL OF Q_A THRU Q_H OUTPUTS ('LS598 ONLY)

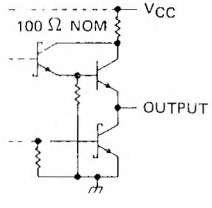

logic symbols†

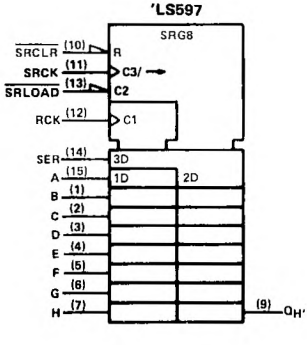

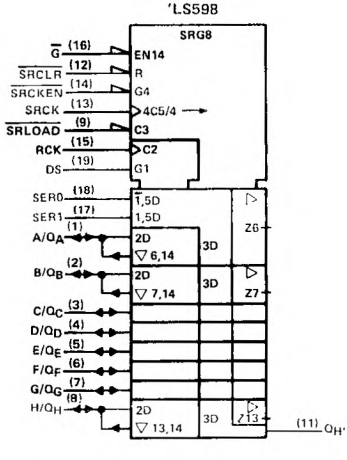

†This symbol is in accordance with ANSI/IEEE Std. 91-1984 and IEC Publication 617-12
Pin numbers shown are for DW, J, N, and W packages.

TEXAS INSTRUMENTS
POST OFFICE BOX 655012 • DALLAS, TEXAS 75265

logic diagram (positive logic)

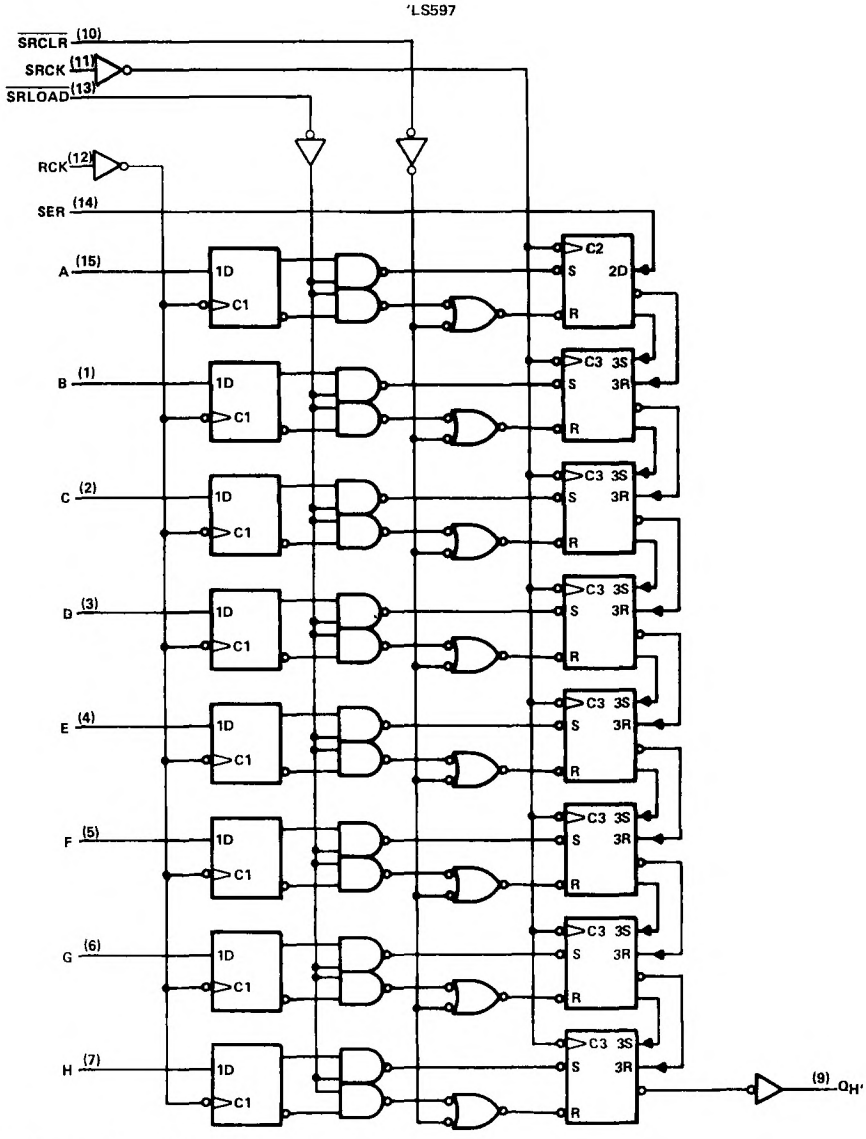

Pin numbers shown are for DW, J, N, and W packages.

logic diagram (positive logic)

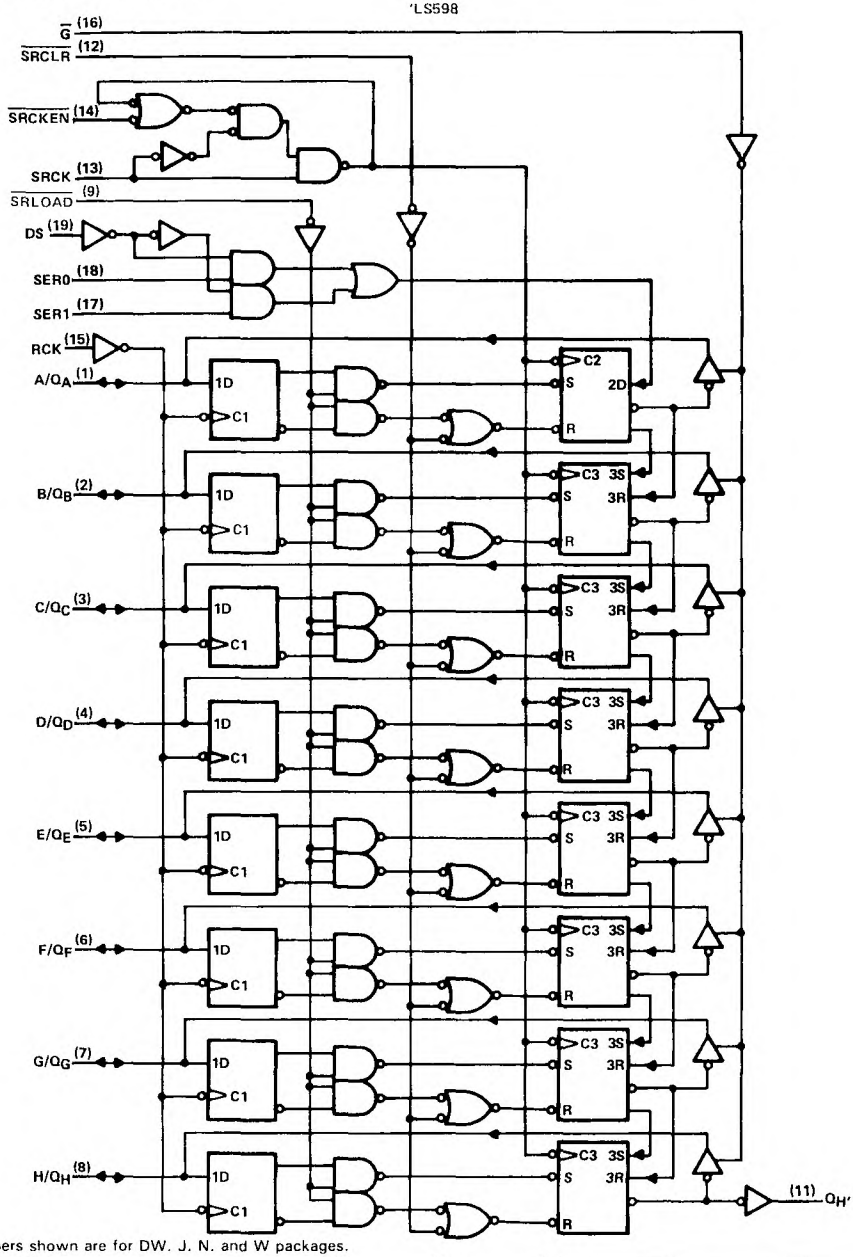

Pin numbers shown are for DW, J, N, and W packages.

TEXAS INSTRUMENTS
POST OFFICE BOX 655012 • DALLAS, TEXAS 75265

absolute maximum ratings over operating free-air temperature range (unless otherwise noted)

Supply voltage, V_{CC} (see Note 1) . . . . . 7 V
Input voltage (excluding I/O ports) . . . . . 7 V
Off-state output voltage (including I/O ports) . . . . . 5.5 V
Operating free-air temperature range: SN54LS597, SN54LS598 . . . . . −55°C to 125°C
SN74LS597, SN74LS598 . . . . . 0°C to 70°C
Storage temperature range . . . . . −65°C to 150°C

NOTE 1: Voltage values are with respect to the network ground terminal.

recommended operating conditions

				SN54LS'			SN74LS'			UNIT
				MIN	NOM	MAX	MIN	NOM	MAX	
V_{CC}	Supply voltage			4.5	5	5.5	4.75	5	5.25	V
V_{IH}	High-level input voltage			2			2			V
V_{IL}	Low-level input voltage					0.7			0.8	V
I_{OH}	High-level output current	Q_H'				−1			−1	mA
		Q_A thru Q_H, 'LS598 only				−1			−2.6	
I_{OL}	Low-level output current	Q_H'				8			16	mA
		Q_A thru Q_H, 'LS598 only				12			24	
f_{SCK}	Shift clock frequency			0		20	0		20	MHz
t_w	Pulse duration	SRCK	high	15			15			ns
			low	35			35			
		RCK		20			20			
		$\overline{SRCLR}$		20			20			
		$\overline{SRLOAD}$		40			40			
t_{su}	Setup time	Data before [illegible] ↑		20			20			ns
		DS before [illegible] ↑ ('LS598 only)		30			30			
		$\overline{SRCEN}$ low before SRCK ↑ ('LS598 only)		20			20			
		$\overline{SRCLR}$ inactive before SRCK ↑		25			25			
		$\overline{SRLOAD}$ inactive before SRCK ↑		30			30			
		RCK ↑ before SRLOAD ↑ (see Note 2)		40			40			
		SER before SRCK ↑		20			20			
t_h	Hold time			0			0			ns
T_A	Operating free-air temperature			−55		125	0		70	°C

NOTE 2: The RCK ↑ before $\overline{SRLOAD}$ ↑ setup time ensures the data saved by RCK ↑ will also be loaded into the shift register.

electrical characteristics over recommended operating free-air temperature range (unless otherwise noted)

PARAMETER			TEST CONDITIONS†		SN54LS' MIN	SN54LS' TYP‡	SN54LS' MAX	SN74LS' MIN	SN74LS' TYP‡	SN74LS' MAX	UNIT
V_{IK}			V_{CC} = MIN, I_I = − 18 mA				− 1.5			− 1.5	V
V_{OH}	'LS598 Q		V_{CC} = MIN, V_{IH} = 2 V, V_{IL} = MAX	I_{OH} = − 1 mA	2.4	3.2					V
				I_{OH} = − 2.6 mA				2.4	3.1		
	Q_H'			I_{OH} = − 1 mA	2.4	3.2		2.4	3.2		
V_{OL}	'LS598 Q		V_{CC} = MIN, V_{IH} = 2 V, V_{IL} = MAX	I_{OL} = 12 mA		0.25	0.4		0.25	0.4	V
				I_{OL} = 24 mA					0.35	0.5	
	Q_H'			I_{OL} = 8 mA		0.25	0.4		0.25	0.4	
				I_{OL} = 16 mA					0.35	0.5	
I_{OZH}	'LS598 Q		V_{CC} = MAX, V_{IH} = 2 V, V_{IL} = MAX, V_O = 2.7 V				20			20	μA
I_{OZL}	'LS598 Q		V_{CC} = MAX, V_{IH} = 2 V, V_{IL} = MAX, V_O = 0.4 V				− 0.4			− 0.4	mA
I_I	'LS598 Q		V_{CC} = MAX	V_I = 5.5 V			0.1			0.1	mA
	Others			V_I = 7 V			0.1			0.1	
I_{IH}			V_{CC} = MAX, V_I = 2.7 V				20			20	μA
I_{IL}	'LS598 SRCK		V_{CC} = MAX, V_I = 0.4 V				− 0.8			− 0.8	mA
	SER, A Thru H						− 0.4			− 0.4	
	Others						− 0.2			− 0.2	
I_{OS}§	'LS598 Q		V_{CC} = MAX, V_O = 0 V		− 30		− 130	− 30		− 130	mA
	Q_H'				− 20		− 100	− 20		− 100	
I_{CC}	'LS597	I_{CCH}	V_{CC} = MAX, All possible inputs grounded, All outputs open			35	53		35	53	mA
		I_{CCL}				35	53		35	53	
	'LS598	I_{CCH}				45	68		45	68	
		I_{CCL}				54	80		54	80	
		I_{CCZ}				56	85		56	85	

† For conditions shown as MIN or MAX, use the appropriate value specified under recommended operating conditions.
‡ All typical values are at V_{CC} = 5 V, T_A = 25°C
§Not more than one output should be shorted at a time and the duration of the short-circuit should not exceed one second.

TEXAS INSTRUMENTS
POST OFFICE BOX 655012 • DALLAS, TEXAS 75265

switching characteristics, V_{CC} = 5 V, T_A = 25°C, (see note 3)

PARAMETER	FROM (INPUT)	TO (OUTPUT)	TEST CONDITIONS	'LS597			'LS598			UNIT
				MIN	TYP	MAX	MIN	TYP	MAX	
f_{max}	[illegible]	Q	R_L = 667 Ω, C_L = 45 pF	20	35		20	35		MHz
f_{max}	[illegible]	Q_H'	R_L = 1 kΩ, C_L = 30 pF	20	35					MHz
t_{PLH}	SRCK↑	Q_H'	R_L = 1 kΩ, C_L = 30 pF		15	23		11	17	ns
t_{PHL}	SPCK↑	Q_H'			20	30		15	23	ns
t_{PLH}	$\overline{SRLOAD}$↓	Q_H'			38	57		28	42	ns
t_{PHL}	[illegible]AD↓	Q_H'			29	44		20	30	ns
t_{PHL}	[illegible]	Q_H'			24	36		18	27	ns
t_{PLH}	[illegible]	Q_H'	R_L = 1 kΩ, C_L = 30 pF		41	60		32	48	ns
t_{PHL}	[illegible]	Q_H'	SRLOAD = L		32	48		24	36	ns
t_{PLH}	[illegible]	Q	R_L = 667 Ω, C_L = 45 pF					12	18	ns
t_{PHL}	[illegible]	Q						19	28	ns
t_{PLH}	SR[illegible]	Q						32	48	ns
t_{PHL}	[illegible]	Q						27	40	ns
t_{PHL}	[illegible]	Q						25	38	ns
t_{PZH}	G↓	Q						26	31	ns
t_{PZL}	G↓	Q						29	43	ns
t_{PHZ}	G↑	Q	R_L = 667 Ω, C_L = 5 pF					25	38	ns
t_{PLZ}	G↑	Q						20	30	ns

NOTE 3: Load circuits and voltage waveforms are shown in Section 1.

typical operating sequences

'LS597

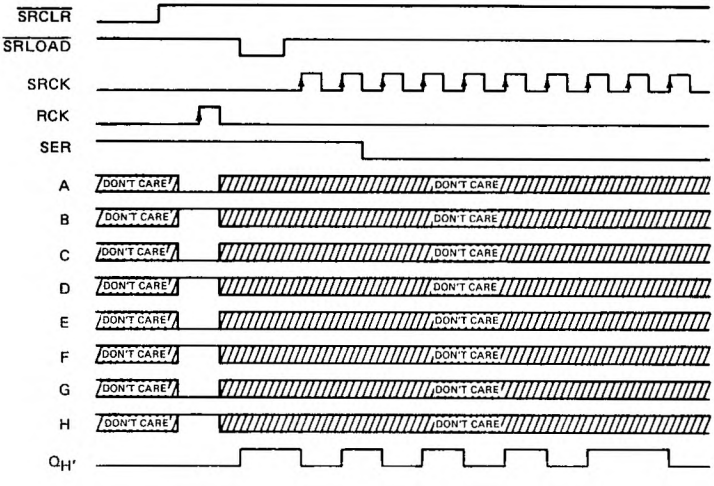

'LS598

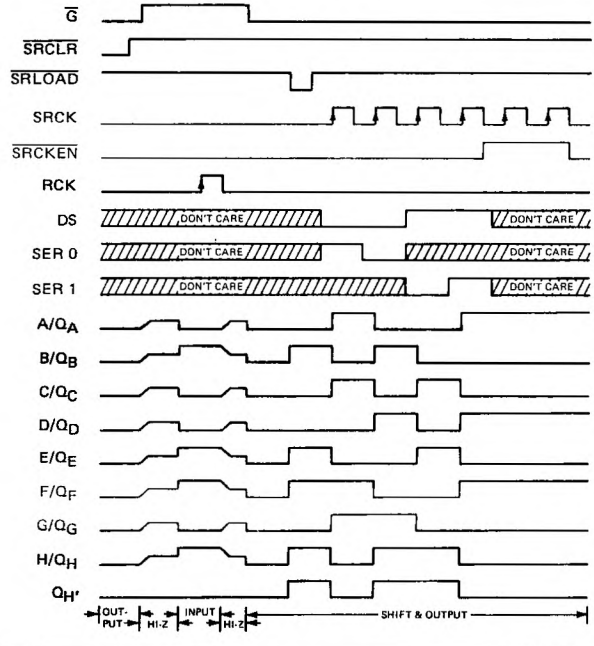

TEXAS INSTRUMENTS
POST OFFICE BOX 655012 • DALLAS, TEXAS 75265

D2547, JANUARY 1981 – REVISED MARCH 1988

- Controls Refresh Cycle of 4K, 16K, and 64K Dynamic RAMs
- Creates Static RAM Appearance
- Choice of Transparent, Cycle Steal, or Burst Refresh Modes
- 3-State Outputs Drive Bus Lines Directly
- Critical Times Are User RC-Programmable to Optimize System Performance

SN74LS'. . . DW OR N PACKAGE
(TOP VIEW)

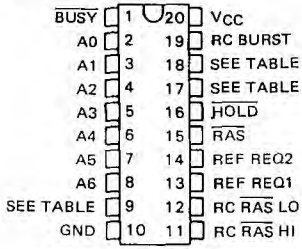

FOR CHIP CARRIER INFORMATION
CONTACT THE FACTORY

SELECTION TABLE

DEVICE	REFRESH MODES	MEMORY SIZE	PIN ASSIGNMENTS		
			PIN 9	PIN 17	PIN 18
'LS600A	Transparent, Burst	4K or 16K	4K/16K	LATCHED RCO	RESET LATCHED RCO
'LS601A	Transparent, Burst	64K	A7	LATCHED RCO	RESET LATCHED RCO
'LS603A	Cycle Steal, Burst	64K	A7	READY	RC CYCLE STEAL

description

The 'LS600A, 'LS601A, and 'LS603A memory refresh controllers contain one 8-bit synchronous counter, nine 3-state buffer drivers, four RC-controlled multivibrators, and other control circuitry on a single monolithic chip. These devices are designed to provide RAS-only refresh on 4K, 16K, and 64K dynamic RAMs. The 'LS600A and 'LS601A provide transparent refresh while the 'LS603A provides cycle-steal refresh. In addition, a burst-mode timer is provided to warn the CPU that the maximum allowable refresh time is about to be violated.

operating modes

In the transparent refresh mode ('LS600A or 'LS601A), row-refresh cycles occur only during inactive CPU-memory times. In most cases the entire memory refresh sequence can be completed "transparently" without interrupting CPU operations. During idle CPU-memory periods, the REF REQ pins should be taken high so as many rows as possible can be refreshed. A low from $\overline{\text{BUSY}}$ will signal the CPU to wait until the end of that current row refresh before reinstating operations. If all row addresses have been refreshed before the burst-mode timer expires, the burst-mode timer will reset.

If the maximum allowable refresh time of the dynamic RAM is about to be exceeded, the burst mode timer will expire causing the $\overline{\text{HOLD}}$ pin to go low. This signals the CPU that a burst-mode refresh is mandatory and the burst-mode refresh will be accomplished when the CPU takes the REF REQ pins high. To ensure that all rows are refreshed, the address counter is reset to zero whenever the burst-mode timer expires. After the last row has been refreshed, the $\overline{\text{HOLD}}$ pin will return high, and the burst-mode timer will reset. The CPU can then return to normal transparent operation.

A LATCHED RCO output pin is also provided on the 'LS600A and 'LS601A to detect when the last row has been refreshed. Upon seeing a RCO from the address counter, the LATCHED RCO output will be set high. This latch is reset by providing a high-going pulse on the RESET LATCHED RCO input.

In the cycle-steal refresh mode ('LS603A), refreshing is accomplished by dividing the safe refresh time into equal segments and refreshing one row in each segment. The segment time is programmed via the RC CYCLE STEAL input and will produce a low level on the $\overline{\text{READY}}$ output at the end of each segment period. This indicates to the CPU to suspend operations for one memory cycle for a row refresh. In effect it "steals" one memory cycle from the CPU. After the CPU recognizes the cycle-steal signal from the $\overline{\text{READY}}$ output, it must take both REF REQ pins high. These devices will then refresh one row and return control back to the CPU by taking $\overline{\text{READY}}$ high. The burst-mode timer is also provided to prevent exceeding the maximum allowable refresh time, and operates in the same manner as in the 'LS600A and 'LS601A. In applications where the burst-mode timer is not required, it can be disabled by connecting the RC Burst input to ground.

PRODUCTION DATA documents contain information current as of publication date. Products conform to specifications per the terms of Texas Instruments standard warranty. Production processing does not necessarily include testing of all parameters.

Copyright © 1983, Texas Instruments Incorporated

'LS600A

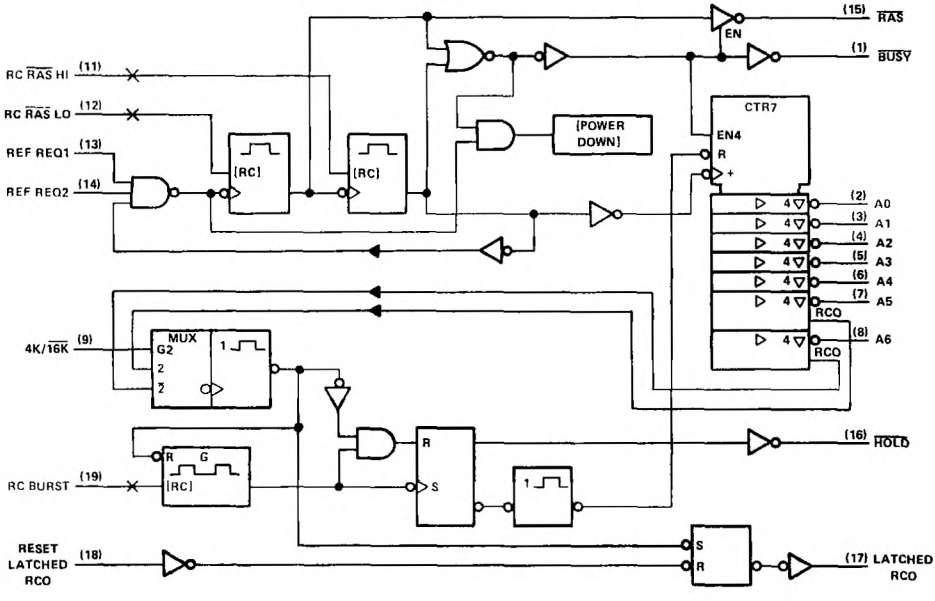

'LS601A

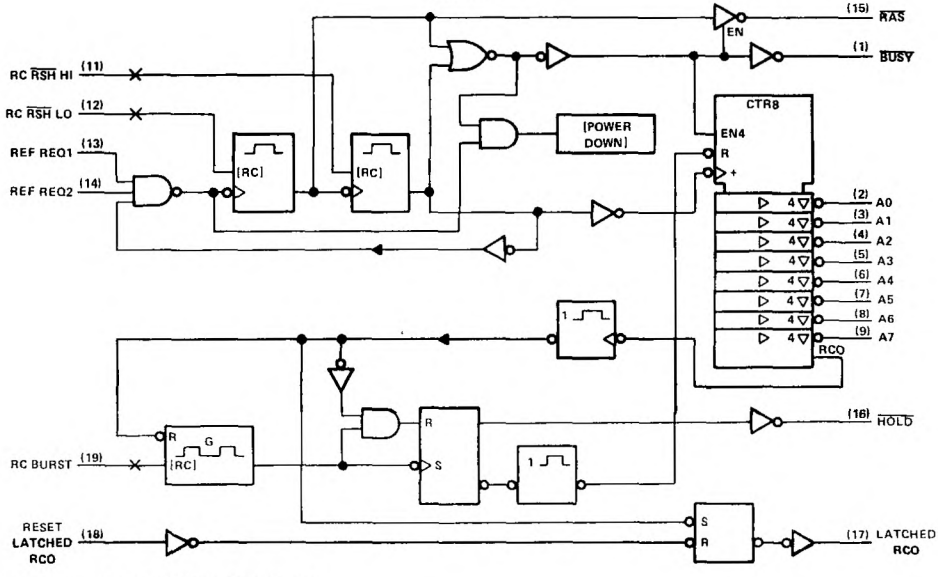

Pin numbers shown are for DW and N packages.

TEXAS INSTRUMENTS
POST OFFICE BOX 655012 • DALLAS, TEXAS 75265

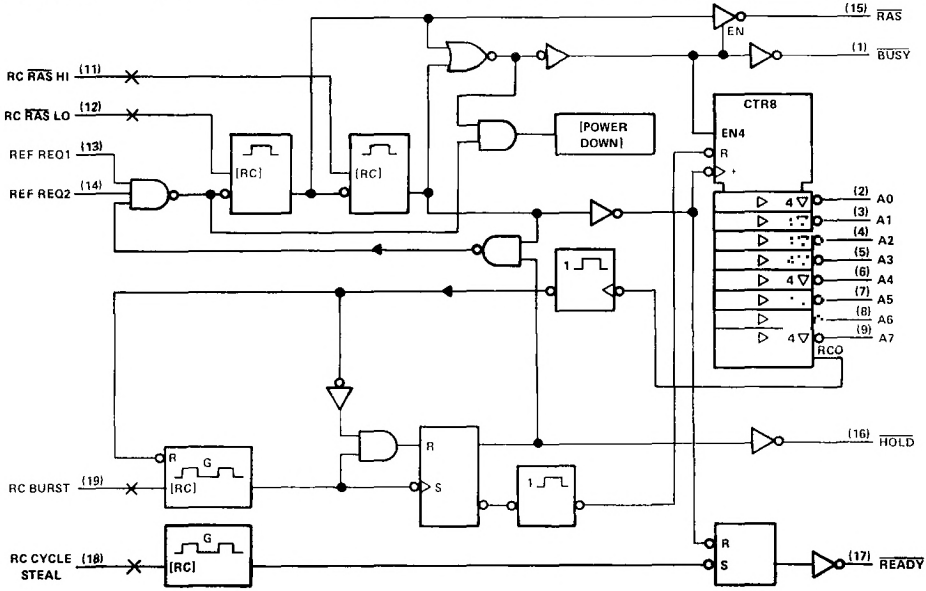

Pin numbers shown are for DW and N packages.

PIN FUNCTION TABLE

PIN	PIN NAME	FUNCTIONAL DESCRIPTION
1	BUSY	Active output indicates to the CPU that a refresh cycle is in progress.
16	HOLD	Active output should be a priority interrupt to the CPU for emergency burst refresh.
15	READY	3-state output row address strobe.
11	RC $\overline{RAS}$ HI	Timing node for high-level portion of $\overline{RAS}$. See Note 1.
12	RC $\overline{RAS}$ LO	Timing node for low-level portion of $\overline{RAS}$. See Note 1.
2-8	A0 thru A6	3-state output row address lines.
9	A7	MSB row address line for 'LS601A and 'LS603A (64K-bit memory controllers).
9	4K/$\overline{16K}$	A high input level disables the A5 row address line for 'LS600A. (The high-level input makes the count chain 5 bits long while the low-level makes the count chain 6 bits long.)
17	$\overline{READY}$	Interrupt to CPU for cycle steal refresh ('LS603A).
17	LATCHED RCO	Normally high-level, will latch low upon RCO of counter ('LS600A or 'LS601A).
18	RC CYCLE STEAL	Timing node that controls the HOLD output ('LS603A). See Note 1.
18	RESET LATCHED RCO	Normally high-level, when pulsed low the LATCHED RCO output will be reset ('LS600A and 'LS601A).
19	RC BURST	Timing node for burst refresh. See Note 1.
13, 14	REF REQ1, REF REQ2	High level on both pins starts and continues row refresh. Low on either pin inhibits refresh.
20, 10	V_{CC}, GND	5-V power supply and network ground pins.

NOTE 1: All timing nodes require a resistor to V_{CC} and a capacitor to GND.

schematics of inputs and outputs

EQUIVALENT OF REF REQ, 4K/$\overline{16K}$, AND RESET LATCHED RCO INPUTS

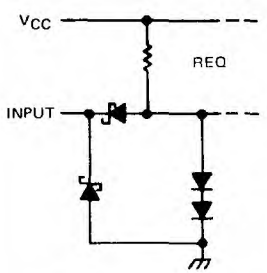

REF REQ: Req = 20 kΩ NOM
4K/$\overline{16K}$: Req = 30 kΩ NOM

TYPICAL OF $\overline{RAS}$ AND A OUTPUTS

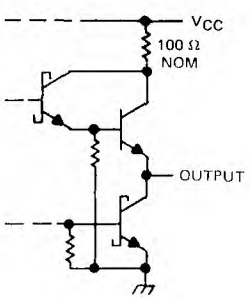

TYPICAL OF $\overline{BUSY}$, $\overline{HOLD}$, $\overline{READY}$ AND LATCHED RCO OUTPUTS

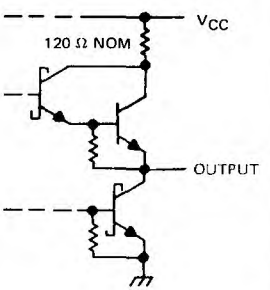

absolute maximum ratings over operating free-air temperature range (unless otherwise noted)

Supply voltage, V_{CC} (see Note 2) . . . . . 7 V
Input voltage . . . . . 7 V
Off-state output voltage . . . . . 5.5 V
Operating free-air temperature range . . . . . 0°C to 70°C
Storage temperature range . . . . . −65°C to 150°C

NOTE 2: Voltage values are with respect to network ground terminal.

TEXAS INSTRUMENTS
POST OFFICE BOX 655012 • DALLAS, TEXAS 75265

recommended operating conditions

		MIN	NOM	MAX	UNIT
Supply voltage, V_{CC}		4.75	5	5.25	V
High-level output current, I_{OH}	A, $\overline{RAS}$			−2.6	mA
	All others			−400	μA
Low-level output current, I_{OL}	A, $\overline{RAS}$			24	mA
	All others			8	
Duration of $\overline{RAS}$ output pulse†	High, t_{SHSL}	75			ns
	Low, t_{SLSH}	75			
Duration of RESET LATCHED RCO pulse, t_{RHRL}		35			ns
Duration of REF REQ pulse during CYCLE STEAL operation,		20			ns
External timing resistor, R_{ext}	RC $\overline{RAS}$ LO, RC [illegible] HI	1		6	kΩ
	RC [illegible] RC C\ [illegible] STEAL	1		[illegible]	
Operating free-air temperature, T_A		0		[illegible]	°C

†Maximum operating frequency for the address counter corresponds to its minimum period, which is the sum of $t_{w(RAS-H)}$ min and $t_{w(RAS-L)}$ min.

electrical characteristics over recommended operating free-air temperature range (unless otherwise noted)

PARAMETER			TEST CONDITIONS		MIN	TYP‡	MAX	UNIT
V_{IH}	High-level input voltage				2			V
V_{IL}	Low-level input voltage						0.8	V
V_{IK}	Input clamp voltage		V_{CC} = 4.75 V, I_I = −1.8 mA				−1.5	V
V_{OH}	High-level output voltage	A, $\overline{RAS}$	V_{CC} = 4.75 V, V_{IH} = 2 V, V_{IL} = 0.8 V	I_{OH} = −2.6 mA	2.4	2.9		V
		All Others		I_{OH} = −400 μA	2.7	3.1		
V_{OL}	Low-level output voltage	A, $\overline{RAS}$	V_{CC} = 4.75 V, V_{IH} = 2 V, V_{IL} = 0.8 V	I_{OL} = 12 mA		0.25	0.4	V
				I_{OL} = 24 mA		0.35	0.5	
		All Others		I_{OL} = 4 mA		0.25	0.4	
				I_{OL} = 8 mA		0.35	0.5	
I_{OZH}	Off-state output current, high-level voltage applied	A, $\overline{RAS}$	V_{CC} = 5.25 V REF REQ at V_{IL} = 0.8 V	V_O = 2.7 V			20	μA
I_{OZL}	Off-state output current, low-level voltage applied			V_O = 0.4 V			−20	μA
I_I	Input current at maximum input voltage		V_{CC} = 5.25 V,	V_I = 7 V			0.1	mA
I_{IH}	High-level input current		V_{CC} = 5.25 V,	V_I = 2.7 V			20	μA
I_{IL}	Low-level input current		V_{CC} = 5.25 V,	V_I = 0.4 V			−0.4	mA
I_{OS}	Short-circuit output current§	A, $\overline{RAS}$	V_{CC} = 5.25 V		−30		−130	mA
		All others			−20		−100	
I_{CC}	Supply current		V_{CC} = 5.25 V, RC $\overline{RAS}$ LO and REF REQ at 0 V			50	85	mA

‡All typical values are at V_{CC} = 5 V, T_A = 25°C.

§Not more than one output should be shorted at a time, and duration of the short-circuit should not exceed one second.

switching characteristics, V_{CC} = 5 V, T_A = 25°C, see note 3

PARAMETER	FROM (INPUT)	TO (OUTPUT)	TEST CONDITIONS	MIN	TYP	MAX	UNIT
t_{QHBL}	REF REQ↑	BUSY	C_L = 15 pF, R_L = 2 kΩ		30	45	ns
t_{SLBH}†	RAS↓	BUSY			245	300	ns
t_{QHSV}	REF REQ↑	RAS	C_L = 320 pF, R_L = 667Ω		47	70	ns
t_{SHSZ}†	RAS↑	RAS	C_L = 5 pF, R_L = 667Ω		245	300	ns
t_{QHAV}	REF REQ↑	A0 – A7	C_L = 160 pF, R_L = 667Ω		38	65	ns
t_{SHAZ}†	RAS↑	A0 – A7	C_L = 5 pF, R_L = 667Ω		245	300	ns
t_{RHCL}	RESET LATCHED RCO↑	LATCHED RCO	C_L = 15 pF, R_L = 2 kΩ		37	55	ns
t_{SHYH}	RAS↑	READY↑			64	85	ns
t_{SLSH}‡	RAS↓	RAS	C_L = 320 pF, R_L = 667Ω		210		ns
t_{SHSL}†	RAS↑	RAS			245		ns
t_{DHDL}§	HOLD↑	HOLD	C_L = 15 pF, R_L = 2 kΩ		3.56		ms
t_{YLYL}¶	READY↓	READY↑			27		μs

†Depends on RC network at pin 11 (4 kΩ, 200 pF used for testing).
‡Depends on RC network at pin 12 (4 kΩ, 200 pF used for testing).
§Depends on RC network at pin 19 (680 kΩ, 0.022 μF used for testing).
¶Depends on RC network at pin 18 (10 kΩ, 0.01 μF used for testing).
NOTE 3: Load circuits and voltage waveforms are shown in Section 1.

explanation of letter symbols

This data sheet uses a new type of letter symbol to describe time intervals. The format is:

$$t_{AB\text{-}CD}$$

where: subscripts A and C indicate the names of the signals for which changes of state or level or establishment of state or level constitute signal events assumed to occur first and last, respectively, that is, at the beginning and end of the time interval.

Subscripts B and D indicate the direction of the transitions and/or the final states or levels of the signals represented by A and C, respectively. One or two of the following is used:

H = high or transition to high
L = low or transition to low
V = a valid steady-state level
X = unknown, changing, or "don't care" level
Z = high-impedance (off) state.

The hyphen between the B and C subscripts is omitted when no confusion is likely to occur. For these letter symbols on this data sheet, the signal names are further abbreviated as follows:

SIGNAL NAME	A or C SUBSCRIPT
BUSY	B
HOLD	D
RAS	S
A0 – A7	A
READY	Y
LATCHED RCO	C
RESET LATCHED RCO	R
REF REQ	Q

TEXAS INSTRUMENTS
POST OFFICE BOX 655012 • DALLAS, TEXAS 75265

TIMING DIAGRAMS

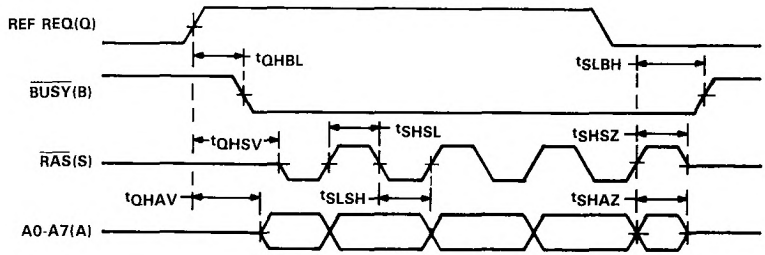

FIGURE 1 – TRANSPARENT REFRESH

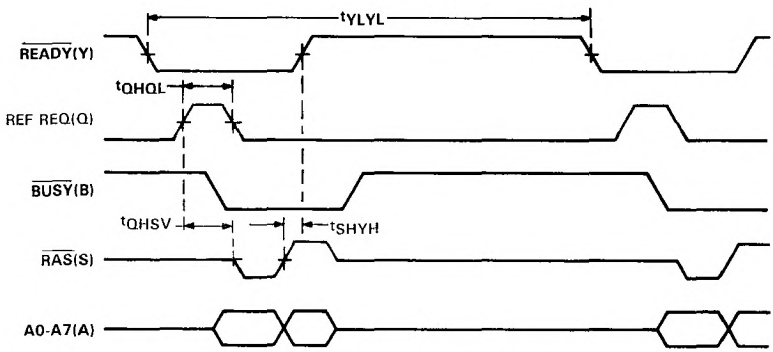

FIGURE 2 – CYCLE STEAL REFRESH

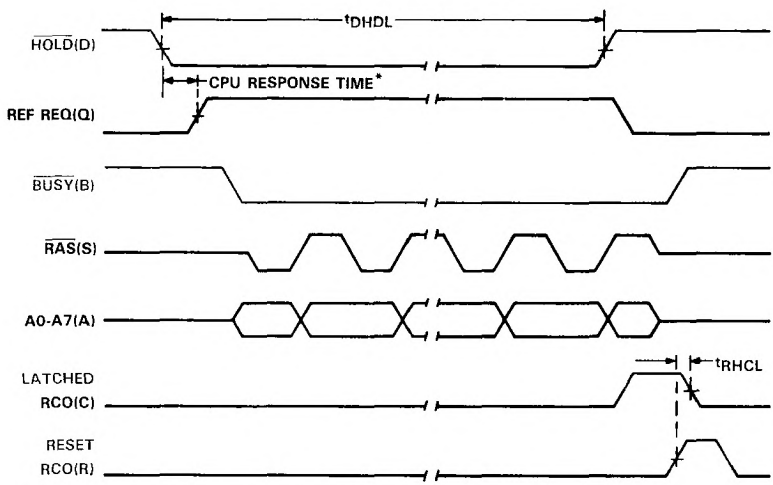

* During testing, an 'LS04 is used to invert HOLD to provide the REF REQ input.

FIGURE 3 – BURST MODE REFRESH

TYPICAL CHARACTERISTICS

PULSE DURATION, $\overline{RAS}$ LOW
vs
EXTERNAL TIMING RESISTOR

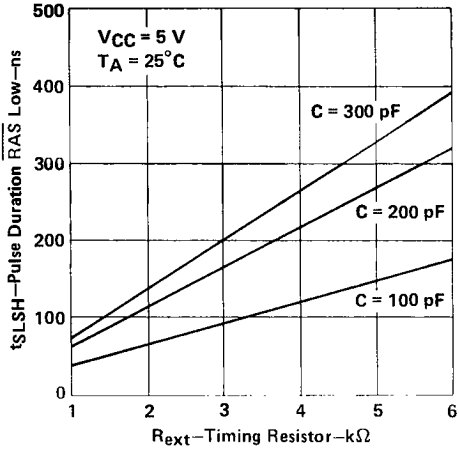

FIGURE 4

CYCLE STEAL REFRESH CYCLE TIME
vs
EXTERNAL TIMING RESISTOR

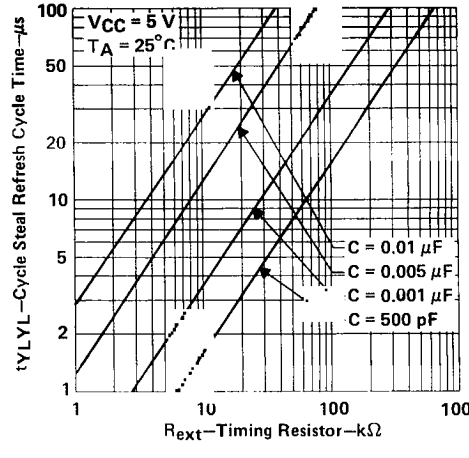

FIGURE 5

PULSE DURATION, RAS HIGH
vs
EXTERNAL TIMING RESISTOR

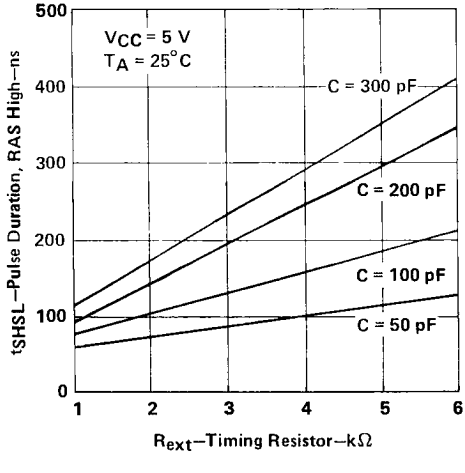

FIGURE 6

PULSE DURATION, BURST REFRESH
vs
EXTERNAL TIMING RESISTOR

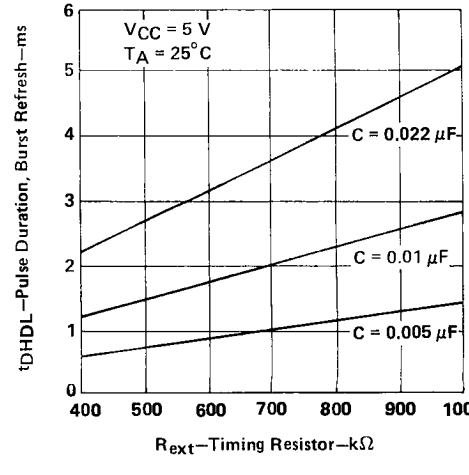

FIGURE 7

D2545, JULY 1979–REVISED MARCH 1988

(TIM99604, TIM99606, TIM99607)

- **Choice of Outputs:**
  Three State ('LS604, 'LS606)
  Open-Collector ('LS607)
- **16 D-Type Registers, One for Each Data Input**
- **Multiplexer Selects Stored Data from Either A Bus or B Bus**
- **Application Oriented:**
  Maximum Speed ('LS604)
  Glitch-Free Operation ('LS606, 'LS607)

SN54LS604, SN54LS606, SN54LS607 . . . JD PACKAGE
SN74LS604, SN74LS606, SN74LS607 . . . JD OR N PACKAGE
(TOP VIEW)

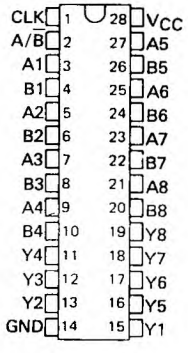

SN54LS604, SN54LS606, SN54LS607 . . . FK PACKAGE
(TOP VIEW)

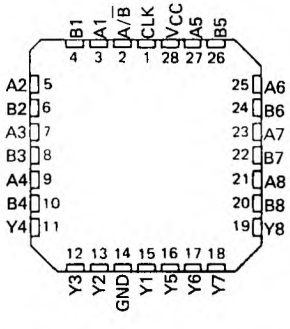

description

The 'LS604, 'LS606, and 'LS607 multiplexed latches are ideal for storing data from two input buses, A and B, and providing the output bus with stored data from either the A or B register.

The clock loads data on the positive-going (low-level to high-level) transition. The clock pin also controls the active and high-impedance states of the outputs. When the clock pin is low, the outputs are in the high-impedance or off state. When the clock pin is high, the outputs are enabled.

The 'LS604 is optimized for high-speed operation. The 'LS606 and 'LS607 are especially designed to eliminate decoding voltage spikes.

These functions are ideal for interface from a 16-bit microprocessor to a 64K RAM board. The row and column addresses can be loaded as one word from the microprocessor and then multiplexed sequentially to the RAM during the time that RAS and CAS are active.

The SN54LS604, SN54LS606, and SN54LS607 are characterized for operation over the full military temperature range of −55°C to 125°C; the SN74LS604, SN74LS606, and SN74LS607 are characterized for operation from 0°C to 70°C.

FUNCTION TABLE

INPUTS				OUTPUTS
A1-A8	B1-B8	SELECT A/$\overline{B}$	CLOCK	Y1-Y8
A data	B data	L	↑	B data
A data	B data	H	↑	A data
X	X	X	L	Z or Off
X	X	L	H	B register stored data
X	X	H	H	A register stored data

H = high level (steady state)
L = low level (steady state)
X = irrelevant
Z = high-impedance state
Off = H if pull-up resistor is connected to open-collector output
↑ = transistion from low to high level

PRODUCTION DATA documents contain information current as of publication date. Products conform to specifications per the terms of Texas Instruments standard warranty. Production processing does not necessarily include testing of all parameters.

schematics of inputs and outputs

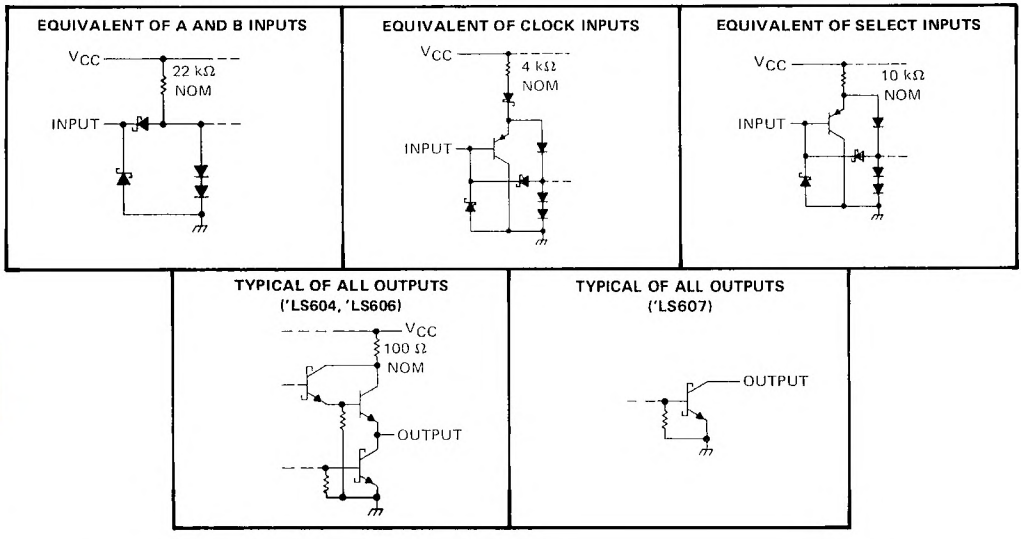

logic symbols†

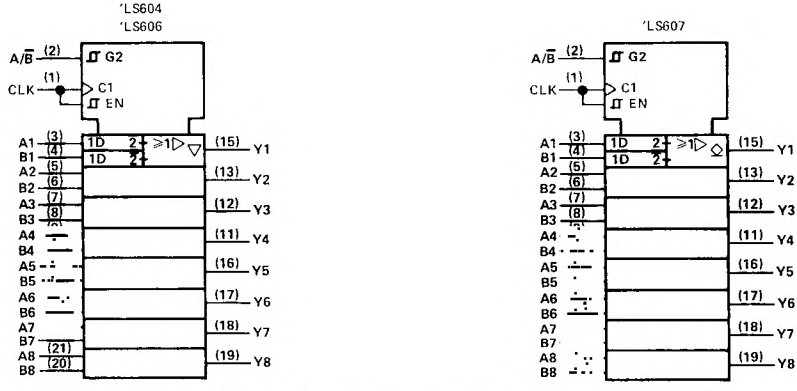

†These symbols are in accordance with ANSI/IEEE Std. 91-1984 and IEC Publication 617-12.
Pin numbers shown are for JD and N packages.

TEXAS INSTRUMENTS
POST OFFICE BOX 655012 • DALLAS, TEXAS 75265

logic diagram (positive logic)

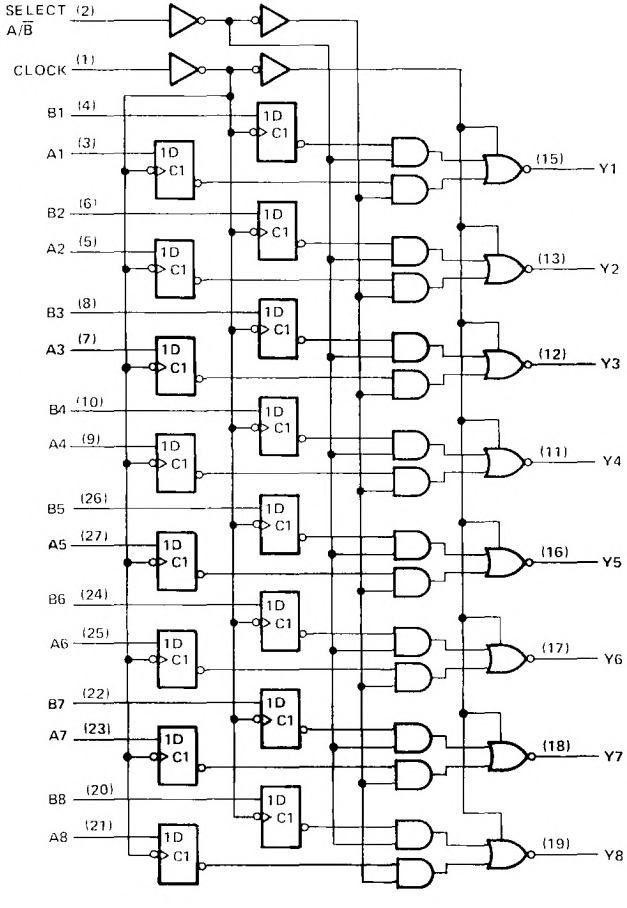

recommended operating conditions

	SN54LS604 SN54LS606			SN74LS604 SN74LS606			UNIT
	MIN	[illegible]	MAX	MIN	[illegible]	MAX	
Supply voltage, V_{CC} (see Note 1)	[illegible]		5.5	4.75	[illegible]	5.25	V
High-level output current, I_{OH}			−1			−2.6	mA
Low-level output current, I_{OL}			12			24	mA
Width of clock pulse, t_w	20			20			ns
Setup time, t_{su}	20†			20†			ns
t_h	0†			0†			ns
Free-air temperature, T_A	−55			0		70	°C

NOTE 1: Voltage values are with respect to network ground terminal.

electrical characteristics over recommended operating free-air temperature range (unless otherwise noted)

PARAMETER		TEST CONDITIONS†			SN54LS604 SN54LS606			SN74LS604 SN74LS606			UNIT
					MIN	TYP‡	MAX	MIN	TYP‡	MAX	
V_{IH}	High				[illegible]			2			V
V_{IL}	[illegible]						0.7			0.8	V
V_{IK}	[illegible] clamp voltage	V_{CC} = MIN,	I_I = −18 mA				−1.5			−1.5	V
V_{OH}	High-level output voltage	V_{CC} = MIN, V_{IL} = V_{IL} max,	V_{IH} = 2 V, I_{OH} = MAX		2.4	3.1		2.4	3.1		V
V_{OL}	Low-level output voltage	V_{CC} = MIN, V_{IL} = V_{IL} max,	V_{IH} = 2 V,	I_{OL} = 12 mA		0.25	0.4		0.25	0.4	V
				I_{OL} = 24 mA					0.35	0.5	
I_{OZH}	Off-state output current, high-level voltage applied	V_{CC} = MAX, V_{IL} = V_{IL} max,	V_{IH} = 2 V, V_O = 2.7 V				20			20	μA
I_{OZL}	Off-state output current, low-level voltage applied	V_{CC} = MAX, V_{IL} = V_{IL} max,	V_{IH} = 2 V, V_O = 0.4				−20			−20	μA
I_I	Input current at maximum input voltage	V_{CC} = MAX,	V_I = 7 V	A, B			0.1			0.1	mA
				CLK, SELECT			0.1			0.1	
I_{IH}	High-level input current	V_{CC} = MAX,	V_I = 2.7 V	A, B			20			20	μA
				CLK, SELECT			20			20	
I_{IL}	Low-level input current	V_{CC} = MAX,	V_I = 0.4 V	A, B			−0.4			−0.4	mA
				CLK, SELECT			−0.2			−0.2	
I_{OS}	[illegible]	V_{CC} = MAX			−30		−130	−30		−130	mA
I_{CC}	Supply current	V_{CC} = MAX,	See Note 2			55	70		55	70	mA

†For conditions shown as MIN or MAX, use the appropriate value specified under recommended operating conditions.
‡All typical values are at V_{CC} = 5 V, T_A = 25°C.
§Note more than one output should be shorted at a time, and duration of the short-circuit should not exceed one second.
NOTE 2. I_{CC} is tested with all inputs grounded and all outputs open.

switching characteristics, V_{CC} = 5 V, T_A = 25°C

PARAMETER	FROM (INPUT)	TEST CONDITIONS	'LS604 MIN	'LS604 TYP	'LS604 MAX	'L[illegible] MIN	'L[illegible] MAX	UNIT
t_{PLH}	Select $A/\overline{B}$ (Data A = H, B = L)	C_L = 45 pF, R_L = 667 Ω, See Note 3		15	25		36	50	ns
t_{PHL}				23	35		16	30	
t_{PLH}	Select $A/\overline{B}$ (Data: A = L, B = H)			31	45		22	35	ns
t_{PHL}				19	30		22	35	
t_{PZH}	Clock			19	30		27	40	ns
t_{PZL}				28	40		35	50	
t_{PHZ}	Clock	C_L = 5 pF, R_L = 667 Ω, See Note 3		20	30		20	30	ns
t_{PLZ}				15	25		15	25	

t_{PLH} ≡ propagation delay time, low-to-high-level output
t_{PHL} ≡ propagation delay time, high-to-low-level output
t_{PZH} ≡ output enable time to high level
t_{PZL} ≡ output enable time to low level
t_{PHZ} ≡ output disable time from high level
t_{PLZ} ≡ output disable time from low level

NOTE 3: Load circuits and voltage waveforms are shown in Section 1.

TEXAS INSTRUMENTS
POST OFFICE BOX 655012 • DALLAS, TEXAS 75265

recommended operating conditions

	SN54LS607			SN74LS607			UNIT
	MIN	NOM	MAX	MIN	NOM	MAX	
Supply voltage, V_{CC} (see Note 1)	4.5	5	5.5	4.75	5	5.25	V
High-level output voltage, V_{OH}			5.5			5.5	V
Low-level output current, I_{OL}			12			24	mA
Width of clock pulse, t_w	20			20			ns
Setup time, t_{su}	20†			20†			ns
Hold time, t_h	0†			0†			ns
Operating free-air temperature, T_A	−55		125	0		70	°C

NOTE 1: Voltage values are with respect to network ground terminal.

electrical characteristics over recommended operating free-air temperature range (unless otherwise noted)

PARAMETER		TEST CONDITIONS†			SN54LS607			SN74LS607			UNIT
					MIN	TYP‡	MAX	MIN	TYP‡	MAX	
V_{IH}	High-level input voltage				2			2			V
V_{IL}	Low-level input voltage						0.7			0.8	V
V_{IK}	Input clamp voltage	V_{CC} = MIN,	I_I = −18 mA				−1.5			−1.5	V
I_{OH}	High-level output current	V_{CC} = MIN, V_{IL} = V_{IL} max,	V_{IH} = 2 V, V_{OH} = 5.5 V				250			250	μA
V_{OL}	Low-level output voltage	V_{CC} = MIN, V_{IL} = V_{IL} max	V_{IH} = 2 V,	I_{OL} = 12 mA		0.25	0.4		0.25	0.4	V
				I_{OL} = 24 mA					0.35	0.5	
I_I	Input current at maximum input voltage	V_{CC} = MAX,	V_I = 7 V	A, B			0.1			0.1	mA
				CLK, SELECT			0.1			0.1	
I_{IH}	High-level input current	V_{CC} = MAX,	V_I = 2.7 V	A, B			20			20	μA
				CLK, SELECT			20			20	
I_{IL}	Low-level input current	V_{CC} = MAX,	V_I = 0.4 V	A, B			−0.4			−0.4	mA
				CLK, SELECT			−0.2			−0.2	
I_{CC}	Supply current	V_{CC} = MAX,	See Note 2			40	60		40	60	mA

†For conditions shown as MIN or MAX, use the appropriate value specified under recommended operating conditions.
‡All typical values are at V_{CC} = 5 V, T_A = 25°C.
NOTE 2: I_{CC} is tested with all inputs grounded and all outputs open.

switching characteristics, V_{CC} = 5 V, T_A = 25°C

PARAMETER	FROM (INPUT)	TEST CONDITIONS	'LS607			UNIT
			MIN	TYP	MAX	
t_{PLH}	Select A/$\overline{B}$ (Data: A = H, B = L)	C_L = 45 pF, R_L = 667 Ω, See Note 3		51	70	ns
t_{PHL}				21	30	
t_{PLH}	Select A/$\overline{B}$ (Data: A = L, B = H)			28	40	ns
t_{PHL}				28	40	
t_{PLH}	Clock			30	45	ns
t_{PHL}				32	45	

NOTE 3: Load circuits and voltage waveforms are shown in Section 1.

D2549, JANUARY 1981—REVISED MARCH 1988

- Expands 4 Address Lines to 12 Address Lines
- Designed for Paged Memory Mapping
- Output Latches Provided on 'LS610 and 'LS611
- Choice of 3-State or Open-Collector Map Outputs
- Compatible with TMS9900 and Other Microprocessors

DEVICE	OUTPUTS LATCHED	MAP OUTPUT TYPE
'LS610	Yes	3-State
'LS612	No	3-State
'LS613	No	Open-Collector

SN54LS' . . JD PACKAGE
SN74LS' . . . JD OR N PACKAGE
(TOP VIEW)

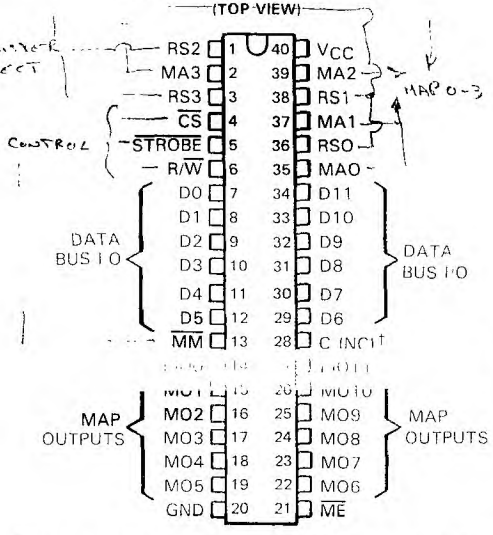

† This pin has no internal connection on 'LS612 and 'LS613

description

Each 'LS610 through 'LS613 memory-mapper integrated circuit contains a 4-line to 16-line decoder, a 16-word by 12-bit RAM, 16 channels of 2-line to 1-line multiplexers, and other miscellaneous circuitry on a monolithic chip. Each 'LS610 and 'LS611 also contains 12 latches with an enable control.

The memory mappers are designed to expand a microprocessor's memory address capability by eight bits. Four bits of the memory address bus (see System Block Diagram) can be used to select one of 16 map registers that contain 12 bits each. These 12 bits are presented to the system memory address bus through the map output buffers along with the unused memory address bits from the CPU. However, addressable memory space without reloading the map registers is the same as would be available with the memory mapper left out. The addressable memory space is increased only by periodically reloading the map registers from the data bus. This configuration lends itself to memory utilization of 16 pages of $2^{(n-4)}$ registers each without reloading (n = number of address bits available from CPU).

PRODUCTION DATA documents contain information current as of publication date. Products conform to specifications per the terms of Texas Instruments standard warranty. Production processing does not necessarily include testing of all parameters.

Copyright © 1981, Texas Instruments Incorporated

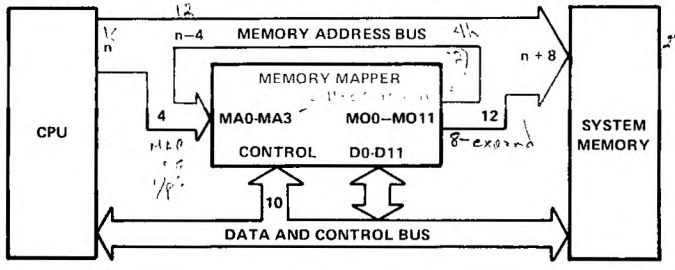

SYSTEM BLOCK DIAGRAM

These devices have four modes of operation: read, write, map, and pass. Data may be read from or loaded into the map register selected by the register select inputs (RS0 thru RS3) under control of R/$\overline{W}$ whenever chip select ($\overline{CS}$) is low. The data I/O takes place on the data bus D0 thru D7. The map operation causes output the contents of the map register selected by the map address inputs (MA0 thru MA3) when $\overline{CS}$ is high and $\overline{MM}$ (map mode control) is low. The 'LS612 and 'LS613 output stages are transparent in this mode, while the 'LS610 and 'LS611 outputs may be transparent or latched. When $\overline{CS}$ and $\overline{MM}$ are both high (pass mode), the address bits on MA0 thru MA3 appear at M08-M011, respectively, (assuming appropriate latch control) with low levels in the other bit positions on the map outputs.

logic diagram (positive logic)

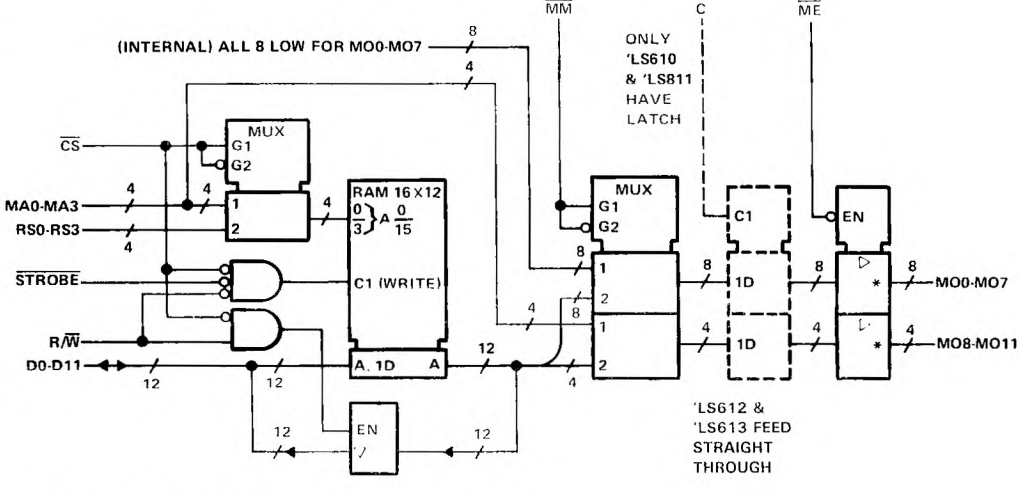

*'LS610 and 'LS612 have 3-state (▽) map outputs.
'LS611 and 'LS613 have open-collector (◇) map outputs.

TEXAS INSTRUMENTS
POST OFFICE BOX 655012 • DALLAS, TEXAS 75265

PIN NO.	PIN NAME	DESCRIPTION
7-12 29-34	D0 thru D11	I/O connections to data and control bus used for reading from and writing to the map register selected by RS0-RS3 when $\overline{CS}$ is low. Mode controlled by R/$\overline{W}$.
36, 38, 1, 3	RS0 thru RS3	Register select inputs for I/O operations.
6	R/$\overline{W}$	Read or write control used in I/O operations to select the condition of the data bus. When high, the data bus outputs are active for reading the map register. When low, the data bus is used to write into the register.
5	$\overline{STROBE}$	Strobe input used to enter data into the selected map register during I/O operations.
4	$\overline{CS}$	Chip select input. A low input level selects the memory mapper (assuming more than one used) for an I/O operation.
35, 37, 39, 2	MA0 thru MA3	Map address inputs to select one of 16 map registers when in map mode ($\overline{MM}$ low and $\overline{CS}$ high).
14-19, 22-27	MO0 thru MO11	Map outputs. Present the map register contents to the system memory address bus in the map mode. In the pass mode, these outputs provide the map address data on MO8-MO11 and low levels on MO0-MO7.
13	$\overline{MM}$	Map mode input. When low, 12 bits of data are transferred from the selected map register to the map outputs. When high (pass mode), the 4 bits present on the map address inputs MA0-MA3 are passed to the map outputs MO8-MO11, respectively, while MO0-MO7 are set low.
21	$\overline{ME}$	Map enable for the map outputs. A low level allows the outputs to be active while a high input level puts the outputs at high impedance.
28	C	Latch enable input for the 'LS610 and 'LS611 (no internal connection for 'LS612 and 'LS613). A high level will transparently pass data to the map outputs. A low level will latch the outputs.
40, 20	V_{CC}, GND	5 V power supply and network ground (substrate) pins.

schematics of inputs and outputs

INPUT/OUTPUT PORTS, D0-D11

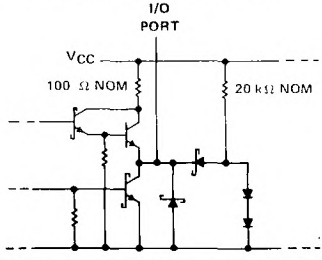

EQUIVALENT OF OTHER INPUTS

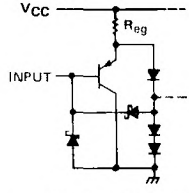

MM R_{eq} = 7 kΩ NOM
RS, STROBE: R_{eq} = 9 kΩ NOM
CS, R/W, MA: R_{eq} = 6 kΩ NOM

TYPICAL OF 'LS610, 'LS612 MAP OUTPUTS

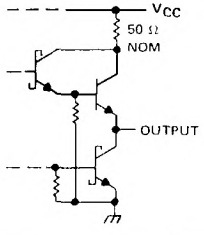

TYPICAL OF SN74LS611, SN74LS613 MAP OUTPUTS

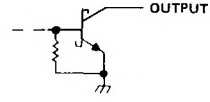

absolute maximum ratings over operating free-air temperature range (unless otherwise noted)

Supply voltage, V_{CC} (see Note 1) . . . . . 7 V
Input voltage: Data Bus I/O . . . . . 5.5 V
All other inputs . . . . . 7 V
Operating free-air temperature range: SN54LS610, SN54LS612 . . . . . −55°C to 125°C
SN74LS610 through SN74LS613 . . . . . 0°C to 70°C
Storage temperature range . . . . . −65°C to 150°C

NOTE 1: Voltage values are with respect to network ground terminal.

TEXAS INSTRUMENTS
POST OFFICE BOX 655012 • DALLAS, TEXAS 75265

recommended operating conditions

				SN54LS610 SN54LS612			SN74LS610 SN74LS612			UNIT
				MIN	NOM	MAX	MIN	NOM	MAX	
V_{CC}	Supply voltage			4.5	5	5.5	4.75	5	5.25	V
V_{IH}	High-level input voltage			2			2			V
V_{IL}	Low-level input voltage					0.7			0.8	V
I_{OH}	High-level output current		MO			−12			−15	mA
			D			−1			−2.6	
I_{OL}	Low-level output current		MO			12			24	mA
			D			4			8	
t_{AVCL}	Address setup time (AV before C low)	'LS610 only	See Figure 2	30			30			ns
t_{SLSH}	Duration of strobe input pulse		See Figure 1	75			75			ns
t_{CSLSL}	$\overline{CS}$ setup time ($\overline{CS}$ low to strobe low)			20			20			ns
t_{WLSL}	R/$\overline{W}$ setup time (R/$\overline{W}$ low to strobe low)			20			20			ns
t_{RVSL}	RS setup time (RS valid to strobe low)			20			20			ns
t_{DVSH}	Data setup time (D0-D11 valid to strobe high)			75			75			ns
t_{SHCSH}	$\overline{CS}$ hold time (Strobe high to $\overline{CS}$ high)			20			20			ns
t_{SHWH}	R/$\overline{W}$ hold time (Strobe high to R/$\overline{W}$ high)			20			20			ns
t_{SHRX}	RS hold time (Strobe high to RS invalid)			20			20			ns
t_{SHDX}	Data hold time (Strobe high to D0-D11 invalid)			20			20			ns
T_A	Operating free-air temperature			−55		125	0		70	°C

electrical characteristics over recommended operating free-air temperature range (unless otherwise noted)

PARAMETER		TEST CONDITIONS†		SN54LS610 SN54LS612 MIN	TYP‡	MAX	SN74LS610 SN74LS612 MIN	TYP‡	MAX	UNIT
V_{IK}		V_{CC} = MIN, I_I = −18 mA				−1.5			−1.5	V
V_{OH}	MO	V_{CC} = MIN, V_{IH} = 2 V, V_{IL} = MAX	I_{OH} = −3 mA	2.4			2.4			V
			I_{OH} = MAX	2			2			
	D		I_{OH} = MAX	2.4			2.4			
V_{OL}	MO	V_{CC} = MIN, V_{IH} = 2 V, V_{IL} = MAX	I_{OL} = 12 mA		0.25	0.4		0.25	0.4	V
			I_{OL} = 24 mA					0.35	0.5	
	D		I_{OL} = 4 mA		0.25	0.4		0.25	0.4	
			I_{OL} = 8 mA					0.35	0.5	
I_{OZH}		V_{CC} = MAX, V_{IH} = 2 V, V_{IL} = MAX, V_O = 2.7 V				20			20	μA
I_{OZL}	MO	V_{CC} = MAX, V_{IH} = 2 V, V_{IL} = MAX, V_O = 0.4 V				−20			−20	μA
	D					−400			−400	
I_I	D	V_{CC} = MAX	V_I = 5.5 V			0.1			0.1	mA
	All others		V_I = 7 V			0.1			0.1	
I_{IH}		V_{CC} = MAX, V_I = 2.7 V				20			20	μA
I_{IL}		V_{CC} = MAX, V_I = 0.4 V				−0.4			−0.4	mA
I_{OS}§		V_{CC} = MAX		−40		[illegible]	−40		[illegible]	mA
				−30		[illegible]	−30		−130	
I_{CC}		V_{CC} = MAX	Outputs high		112	[illegible]		112	180	mA
			Outputs low		112	190		112	180	
			Outputs disabled		150	230		180	230	

†For conditions shown as MIN or MAX, use the appropriate value specified under recommended operating conditions.
‡All typical values are at V_{CC} = 5 V, T_A = 25°C.
§Not more than one output should be shorted at a time, and duration of the short-circuit should not exceed one second.

switching characteristics, V_{CC} = 5 V, T_A = 25°C, C_L = 45 pF to GND

PARAMETER		FROM (INPUT)	TO (OUTPUT)	TEST CONDITIONS	'LS610 MIN	TYP	MAX	'LS612 MIN	TYP	MAX	UNIT
t_{CSLDV}	Access (enable) time	$\overline{CS}$↓	D0-11	R_L = 2 kΩ, See Figure 1, See Notes 2 and 3		28	50		26	50	ns
t_{WHDV}	Access (enable) time	R/$\overline{W}$↑	D0-11			20	35		20	35	ns
t_{RVDV}	Access time	RS	D0-11			49	75		39	75	ns
t_{WLDZ}	Disable time	R/$\overline{W}$↓	D0-11			32	50		30	50	ns
t_{CSHDZ}	Disable time	$\overline{CS}$↑	D0-11			42	65		38	65	ns
t_{ELQV}	Access (enable) time	$\overline{ME}$↓	MO0-11	R_L = 667 Ω, See Figure 2, See Notes 2 and 3		19	30		17	30	ns
t_{CSHQV}	Access time	$\overline{CS}$↑	MO0-11			56	85		48	85	ns
t_{MLQV}	Access time	$\overline{MM}$↓	MO0-11			25	40		22	40	ns
t_{CHQV}	Access time	C↑	MO0-11			24	40				ns
t_{AVQV1}	Access time ($\overline{MM}$ low)	MA	MO0-11			46	70		39	70	ns
t_{MHQV}	Access time	$\overline{MM}$↑	MO0-11			24	40		22	40	ns
t_{AVQV2}	Propagation time ($\overline{MM}$ high)	MA	MO8-11			19	30		13	30	ns
t_{EHQZ}	Disable time	$\overline{ME}$↑	MO0-11			14	25		14	25	ns

NOTES: 2. Access times are tested as t_{PLH} and t_{PHL} or t_{PZH} or t_{PZL}. Disable times are tested as t_{PHZ} and t_{PLZ}.
3. Load circuits and voltage waveforms are shown in Section 1.

TEXAS INSTRUMENTS
POST OFFICE BOX 655012 • DALLAS, TEXAS 75265

recommended operating conditions

				MIN	NOM	MAX	UNIT
V_{CC}	Supply voltage			4.75	5	5.25	V
V_{IH}	High-level input voltage			2			V
V_{IL}	Low-level input voltage					0.8	V
V_{OH}	High-level output voltage		MO			5.5	V
I_{OH}	High-level output current		D			−2.6	mA
I_{OL}	Low-level output current		MO			24	mA
			D			8	
t_{AVCL}	Address setup time (AV before C low)	SN74LS611 only	See Figure 2	30			ns
t_{SLSH}	Duration of strobe input pulse		See Figure 1	75			ns
t_{CSLSL}	$\overline{CS}$ setup time ($\overline{CS}$ low to strobe low)			20			ns
t_{WLSL}	R/$\overline{W}$ setup time (R/$\overline{W}$ low to strobe low)			20			ns
t_{RVSL}	RS setup time (RS valid to strobe low)			20			ns
t_{DVSH}	Data setup time (D0-D11 valid to strobe high)			75			ns
t_{SHCSH}	$\overline{CS}$ hold time (Strobe high to $\overline{CS}$ high)			20			ns
t_{SHWH}	R/$\overline{W}$ hold time (Strobe high to R/$\overline{W}$ high)			20			ns
t_{SHRX}	RS hold time (Strobe high to RS invalid)			20			ns
t_{SHDX}	Data hold time (Strobe high to D0-D11 invalid)			20			ns
T_A	Operating free-air temperature			0		70	°C

electrical characteristics over recommended operating free-air temperature range (unless otherwise noted)

PARAMETER		TEST CONDITIONS†			MIN	TYP‡	MAX	UNIT
V_{IK}		V_{CC} = MIN, I_I = −18 mA					−1.5	V
V_{OH}	D	V_{CC} = MIN, V_{IL} = MAX,	V_{IH} = 2 V, I_{OH} = MAX		2.4			V
I_{OH}	MO	V_{CC} = MIN,	V_{IH} = 2 V,	V_{OH} = 5.5 V			0.1	mA
V_{OL}	MO	V_{CC} = MIN, V_{IL} = MAX	V_{IH} = 2 V,	I_{OL} = 12 mA		0.25	0.4	V
				I_{OL} = 24 mA		0.35	0.5	
	D			I_{OL} = 4 mA		0.25	0.4	
				I_{OL} = 8 mA		0.35	0.5	
I_{OZH}	D	V_{CC} = MAX, V_{IL} = MAX,	V_{IH} = 2 V, V_O = 2.7 V				20	μA
I_{OZL}	D	V_{CC} = MAX, V_O = 0.4 V	V_{IH} = 2 V,				−0.4	mA
I_I	D	V_{CC} = MAX		V_I = 5.5 V			0.1	mA
	All others			V_I = 7 V			0.1	
I_{IH}		V_{CC} = MAX, V_I = 2.7 V					20	μA
I_{IL}		V_{CC} = MAX, V_I = 0.4 V					−0.4	mA
I_{OS}§	D	V_{CC} = MAX			−30		−[illegible]	mA
I_{CC}		V_{CC} = MAX	Outputs high			100	[illegible]	mA
			Outputs low			100	170	
			Outputs disabled			110	200	

†For conditions shown as MIN or MAX, use the appropriate value specified under recommended operating conditions.
‡All typical values are at V_{CC} = 5 V, T_A = 25°C.
§Not more than one output should be shorted at a time, and duration of the short-circuit should not exceed one second.

switching characteristics, V_{CC} = 5 V, T_A = 25°C, C_L = 45 pF to GND

PARAMETER		FROM (INPUT)	TO (OUTPUT)	TEST CONDITIONS	SN74LS611		SN74LS613		UNIT
					MIN	MAX	MIN	MAX	
t_{CSLDV}	Access (enable) time	$\overline{CS}$↓	D0-11	R_L = 2 kΩ, See Figure 1, See Notes 2 and 3	31	50	28	50	ns
t_{WHDV}	Access (enable) time	R/$\overline{W}$↑	D0-11		23	35	21	35	ns
t_{RVDV}	Access time	[illegible]	D0-11		51	75	47	75	ns
t_{WLDZ}	Disable time	R/$\overline{W}$↓	D0-11		32	50	31	50	ns
t_{CSHDZ}	Disable time	$\overline{CS}$↑	D0-11		41	65	40	65	ns
t_{ELQV}	Access (enable) time	$\overline{ME}$↓	MO0-11	R_L = 667 Ω, See Figure 2, See Notes 2 and 3	21	30	19	30	ns
t_{CSHQV}	Access time	$\overline{CS}$↑	MO0-11		57	90	53	90	ns
t_{MLQV}	Access time	MM↓	MO0-11		25	40	25	40	ns
t_{CHQV}	Access time	C↑	MO0-11		30	45			ns
t_{AVQV1}	Access time ($\overline{MM}$ low)	MA	MO0-11		47	70	44	70	ns
t_{MHQV}	Access time	MM↑	MO0-11		31	50	31	50	ns
t_{AVQV2}	Propagation time ($\overline{MM}$ high)	MA	MO8-11		21	30	20	30	ns
t_{EHQZ}	Disable time	ME↑	MO0-11		15	25	15	25	ns

NOTES: 2. Access times are tested as t_{PLH} and t_{PHL} or t_{PZH} or t_{PZL}. Disable times are tested as t_{PHZ} and t_{PLZ}.
3. Load circuits and voltage waveforms are shown in Section 1.

TEXAS INSTRUMENTS
POST OFFICE BOX 655012 • DALLAS, TEXAS 75265

explanation of letter symbols

This data sheet uses a new type of letter symbol based on JEDEC Standard 100 to describe time intervals. The format is:

$$t_{AB\text{-}CD}$$

where: subscripts A and C indicate the names of the signals for which changes of state or level or establishment of state or level constitute signal events assumed to occur first and last, respectively, that is, at the beginning and end of the time interval.

Subscripts B and D indicate the direction of the transitions and/or the final states or levels of the signals represented by A and C, respectively. One or two of the following is used:

H = high or transition to high
L = low or transition to low
V = a valid steady-state level
X = unknown, changing, or "don't care" level
Z = high-impedance (off) state.

The hyphen between the B and C subscripts is omitted when no confusion is likely to occur. For these letter symbols on this data sheet, the signal names are further abbreviated as follows:

SIGNAL NAME	A AND C SUBSCRIPT	SIGNAL NAME	A AND C SUBSCRIPT
C	C	[illegible]	E
$\overline{CS}$	CS	[illegible]	M
D0–11	D	R/W	W
MA0–MA3	A	RS0–RS3	R
MO0–MO11	Q	$\overline{STROBE}$	S

TIMING DIAGRAMS

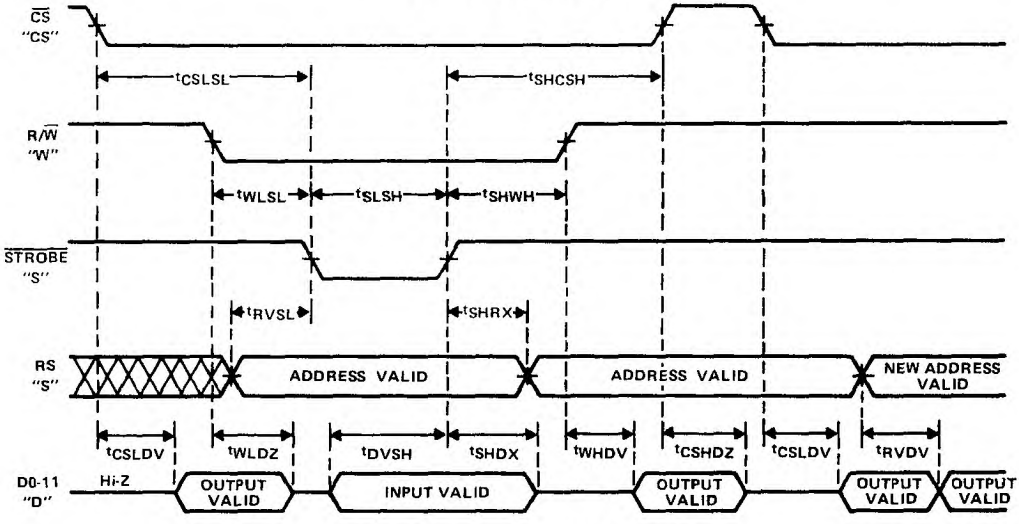

FIGURE 1. WRITE AND READ MODES

TIMING DIAGRAMS

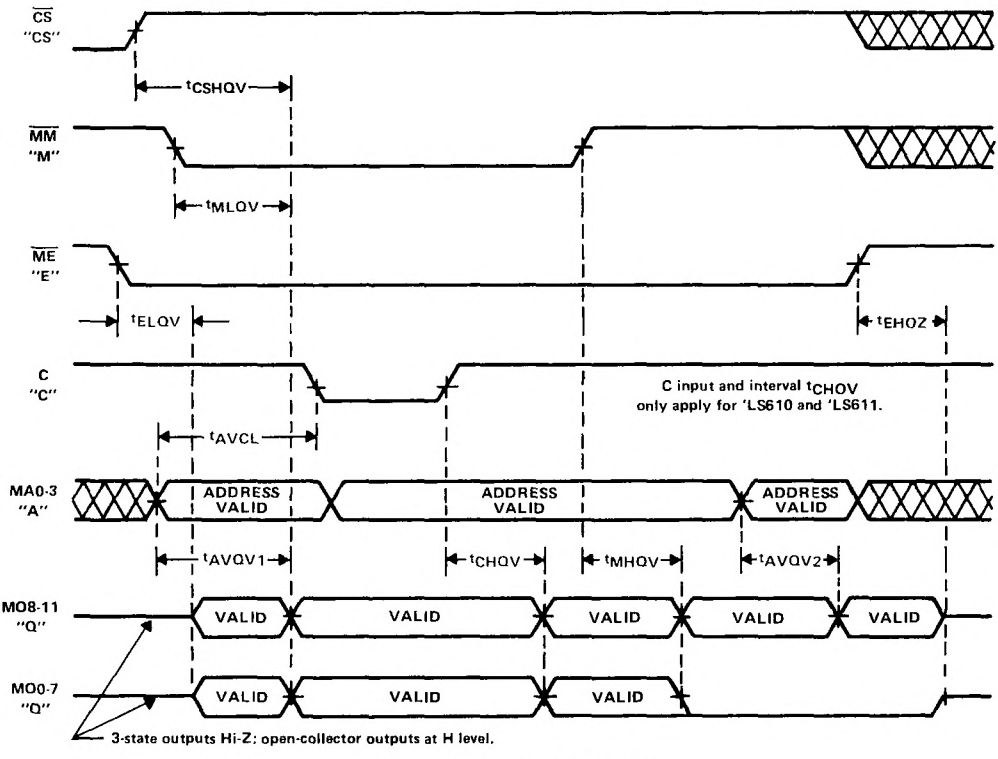

FIGURE 2. MAP AND PASS MODES

TEXAS INSTRUMENTS
POST OFFICE BOX 655012 • DALLAS, TEXAS 75265

- Bidirectional Bus Transceivers in High-Density 20-Pin Packages
- Local Bus-Latch Capability
- Hysteresis at Bus Inputs Improves Noise Margins
- Choice of True or Inverting Logic
- Choice of 3-State or Open-Collector Outputs

DEVICE	OUTPUT	LOGIC
'LS620	3-State	Inverting
'LS621	Open-Collector	True
'LS623	3-State	True

SN54LS620, SN54LS621,
SN54LS622 . . . J PACKAGE
SN74LS620, SN74LS621,
SN74LS623 . . . DW OR N PACKAGE
(TOP VIEW)

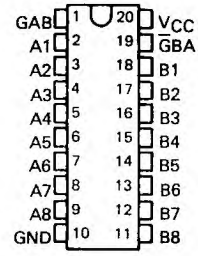

SN54LS620, SN54LS621,
SN54LS622 . . . FK PACKAGE
(TOP VIEW)

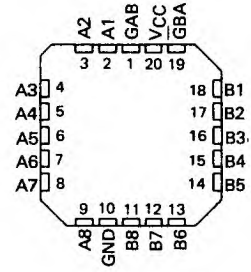

description

These octal bus transceivers are designed for asynchronous two-way communication between data buses. The control function implementation allows for maximum flexibility in timing.

These devices allow data transmission from the A bus to the B bus or from the B bus to the A bus depending upon the logic levels at the enable inputs ($\overline{G}BA$ and GAB).

The enable inputs can be used to disable the device so that the buses are effectively isolated.

The dual-enable configuration gives the 'LS620, 'LS621, and 'LS623 the capability to store data by simultaneous enabling of $\overline{G}BA$ and GAB. Each output reinforces its input in this transceiver configuration. Thus, when both control inputs are enabled and all other data sources to the two sets of bus lines are at high impedance, both sets of bus lines (16 in all) will remain at their last states. The 8-bit codes appearing on the two sets of buses will be identical for the 'LS621 and 'LS623 devices or complementary for the 'LS620.

FUNCTION TABLE

ENABLE $\overline{G}BA$	INPUTS GAB	OPERATION 'LS620	OPERATION 'LS621, 'LS623
L	L	$\overline{B}$ data to A bus	B data to A bus
H	H	$\overline{A}$ data to B bus	A data to B bus
H	L	Isolation	Isolation
L	H	$\overline{B}$ data to A bus, $\overline{A}$ data to B bus	B data to A bus, A data to B bus

H = high level, L = low level

absolute maximum ratings over operating free-air temperature range (unless otherwise noted)

Supply voltage, V_{CC} (see Note 1) . . . . . 7 V
Input voltage . . . . . 7 V
Off-state output voltage . . . . . 5.5 V
Operating free-air temperature range: SN54LS' . . . . . −55°C to 125°C
SN74LS' . . . . . 0°C to 70°C
Storage temperature range . . . . . −65°C to 150°C

NOTE 1 Voltage values are with respect to network ground terminal.

PRODUCTION DATA documents contain information current as of publication date. Products conform to specifications per the terms of Texas Instruments standard warranty. Production processing does not necessarily include testing of all parameters.

logic symbols†

'LS620

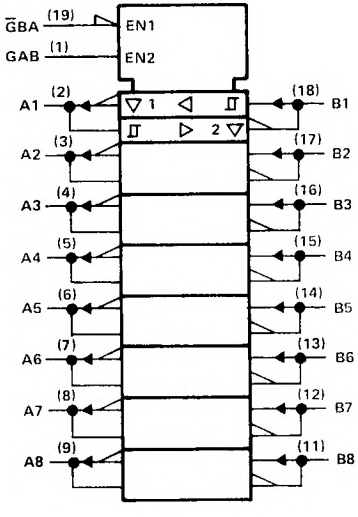

'LS621

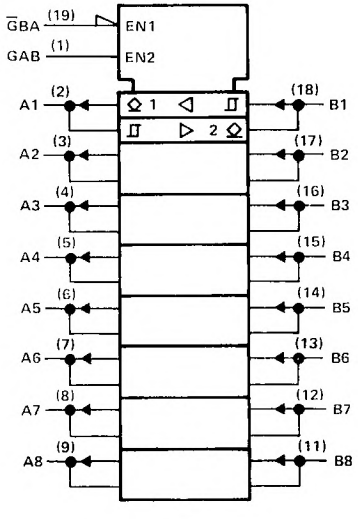

'LS623

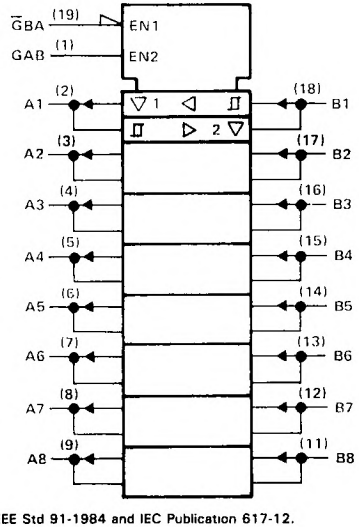

† These symbols are in accordance with ANSI/IEEE Std 91-1984 and IEC Publication 617-12.
Pin numbers shown are for DW, J, and N packages.

TEXAS INSTRUMENTS
POST OFFICE BOX 655012 • DALLAS, TEXAS 75265

logic diagrams (positive logic)

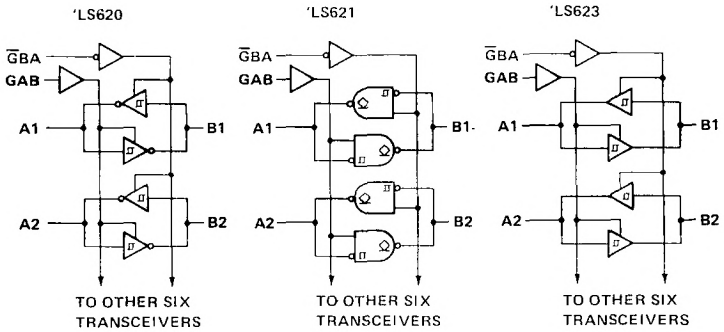

schematics of inputs and outputs

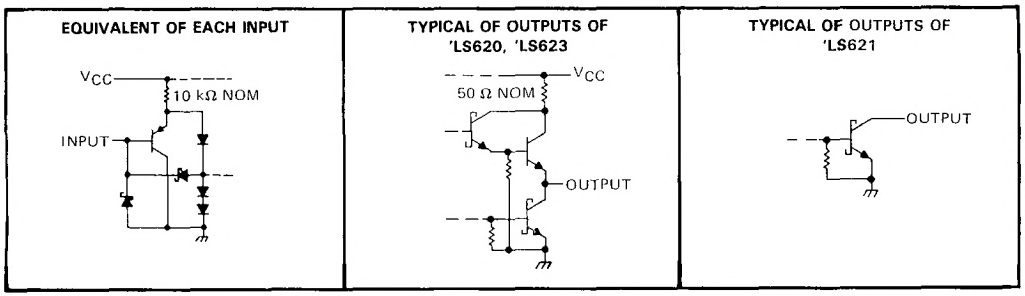

recommended operating conditions

PARAMETER	SN54LS620			SN74LS620 SN74LS623			UNIT
	MIN	NOM	MAX	MIN	NOM	MAX	
Supply voltage, V_{CC} (see Note 1)	4.5	5	5.5	4.75	5	5.25	V
High-level output current, I_{OH}						−15	mA
Low-level output current, I_{OL}			12			24	mA
Operating free-air temperature, T_A	−55		125	0		70	°C

NOTE 1: Voltage values are with respect to network ground terminal.

electrical characteristics over recommended operating free-air temperature range (unless otherwise noted)

PARAMETER			TEST CONDITIONS†		SN54LS620			SN74LS620 SN74LS623			UNIT
					MIN	TYP‡	MAX	MIN	TYP‡	MAX	
V_{IH}	High-level input voltage				2			2			V
V_{IL}	Low-level input voltage						0.5			0.6	V
V_{IK}	Input clamp voltage		V_{CC} = MIN,	I_I = −18 mA			−1.5			−1.5	V
	Hysteresis ($V_{T+} - V_{T-}$)	A or B input	V_{CC} = MIN		0.1	0.4		0.2	0.4		V
V_{OH}	High-level output voltage		V_{CC} = MIN, V_{IH} = 2 V, V_{IL} = V_{IL} max	I_{OH} = −3 mA	2.4	3.4		2.4	3.4		V
				I_{OH} = MAX	2			2			
V_{OL}	Low-level output voltage		V_{CC} = MIN, V_{IH} = 2 V, V_{IL} = V_{IL} max	I_{OL} = 12 mA		0.25	0.4		0.25	0.4	V
				I_{OL} = 24 mA					0.35	0.5	
I_{OZH}	Off-state output current, high-level voltage applied		V_{CC} = MAX, V_O = 2.7 V	$\overline{G}$ at 2 V,			20			20	μA
I_{OZL}	Off-state output current, low-level voltage applied		V_{CC} = MAX, V_O = 0.4 V	$\overline{G}$ at 2 V,			−400			−400	μA
I_I	Input current at maximum input voltage	A or B	V_{CC} = MAX,	V_I = 5.5 V			0.1			0.1	mA
		$\overline{G}$BA or $\overline{G}$AB		V_I = 7 V			0.1			0.1	
I_{IH}	High-level input current		V_{CC} = MAX	V_I = 2.7 V			20			20	μA
I_{IL}	Low-level input current		V_{CC} = MAX	V_I = 0.4 V			−0.4			−0.4	mA
I_{OS}	Short-circuit output current §		V_{CC} = MAX		−40		−225	−40		−225	mA
I_{CC}	Total supply current	Outputs high	V_{CC} = MAX,	Outputs open		48	70		48	70	mA
		Outputs low				62			62	90	
		Outputs at Hi-Z				64			64	95	

† For conditions shown as MIN or MAX use the appropriate value specified under recommended operating conditions.
‡ All typical values are at V_{CC} = 5 V, T_A = 25°C.
§ Not more than one output should be shorted at a time, and duration of the short-circuit should not exceed one second.

switching characteristics at V_{CC} = 5 V, T_A = 25°C

PARAMETER		FROM (INPUT)	TO (OUTPUT)	TEST CONDITIONS	'LS620			SN74LS623			UNIT
					MIN	TYP	MAX	MIN	TYP	MAX	
t_{PLH}	Propagation delay time, low-to-high-level output	A	B	C_L = 45 pF, R_L = 667 Ω, See Note 2		6			8	15	ns
		B	A			6	10		8	15	
t_{PHL}	Propagation delay time, high-to-low-level output	A	B			8	15		11	15	ns
		B	A			8	15		11	15	
t_{PZL}	Output enable time to low level	$\overline{G}$BA	A			31	40		31	40	ns
		$\overline{G}$AB	B			31	40		31	40	
t_{PZH}	Output enable time to high level	$\overline{G}$BA	A			23	40		26	40	ns
		$\overline{G}$AB	B			23	40		26	40	
t_{PLZ}	Output disable time from low level	$\overline{G}$BA	A	C_L = 5 pF, R_L = 667 Ω, See Note 2		15	25		15	25	ns
		$\overline{G}$AB	B			15	25		15	25	
t_{PHZ}	Output disable time from high level	$\overline{G}$BA	A			15	25		15	25	ns
		$\overline{G}$AB	B			15	25		15	25	

t_{PLH} = Propagation delay time, low-to-high-level output
t_{PHL} = Propagation delay time, high-to-low-level output
t_{PZH} = Output enable time to high level
t_{PZL} = Output enable time to low level
t_{PHZ} = Output disable time from high level
t_{PLZ} = Output disable time from low level

NOTE 2: Load circuits and voltage waveforms are shown in Section 1.

TEXAS INSTRUMENTS
POST OFFICE BOX 655012 • DALLAS, TEXAS 75265

recommended operating conditions

PARAMETER	SN54LS621			SN74LS621			UNIT
	MIN	NOM	MAX	MIN	NOM	MAX	
Supply voltage, V_{CC} (see Note 1)	4.5	5	5.5	4.75	5	5.25	V
High-level output voltage, V_{OH}			5.5			5.5	V
Low-level output current, I_{OL}			12			24	mA
Operating free-air temperature, T_A	−55		125	0		70	°C

NOTE 1: Voltage values are with respect to network ground terminal.

electrical characteristics over recommended operating free-air temperature range (unless otherwise noted)

PARAMETER			TEST CONDITIONS†		SN54LS621			SN74LS621			UNIT
					MIN	TYP‡	MAX	MIN	TYP‡	MAX	
V_{IH}	High-level input voltage				2			2			V
V_{IL}	Low-level input voltage						0.5			0.6	V
V_{IK}	Input clamp voltage		V_{CC} = MIN,	I_I = −18 mA			−1.5			−1.5	V
	Hysteresis ($V_{T+} - V_{T-}$) A or B input		V_{CC} = MIN		0.1	0.4		0.2	0.4		V
I_{OH}	High-level output current		V_{CC} = MIN, V_{IL} = V_{IL} max,	V_{IH} = 2 V, V_{OH} = 5.5 V			100			100	μA
V_{OL}	Low-level output voltage		V_{CC} = MIN, V_{IH} = 2 V, V_{IL} = V_{IL} max	I_{OL} = 12 mA		0.25	0.4		0.25	0.4	V
				I_{OL} = 24 mA					0.35	0.5	
I_I	Input current at maximum input voltage	A or B	V_{CC} = MAX,	5.5 V			0.1			0.1	mA
		GAB or $\overline{GBA}$		V_I = 7 V			0.1			0.1	
I_{IH}	High-level input current		V_{CC} = MAX,	V_I = 2.7 V			20			20	μA
I_{IL}	Low-level input current		V_{CC} = MAX,	V_I = 0.4 V			−0.4			−0.4	mA
I_{CC}	Total supply current	Outputs high	V_{CC} = MAX,	Outputs open		48	70		48	70	mA
		Outputs low				62	90		62	90	

†For conditions shown as MIN or MAX use the appropriate value specified under recommended operating conditions.
‡All typical values are at V_{CC} = 5 V, T_A = 25°C.

switching characteristics, V_{CC} = 5 V, T_A = 25°C

PARAMETER		FROM (INPUT)	TO (OUTPUT)	TEST CONDITIONS				UNIT
					MIN	TYP	MAX	
t_{PLH}	Propagation delay time, low-to-high-level output	A	B	C_L = 45 pF, R_L = 667 Ω, See Note 2		17	25	ns
		B	A			17	25	
t_{PHL}	Propagation delay time, high-to-low-level output	A	B			16	25	ns
		B	A			16	25	
t_{PLH}	Output disable time from low level	$\overline{GBA}$	A			23	40	ns
			B			25	40	
t_{PHL}	Output enable time from high level		A			34	50	ns
			B			37	50	

t_{PLH} = Propagation delay time, low-to-high-level output
t_{PHL} = Propagation delay time, high-to-low-level output
NOTE 2: Load circuits and voltage waveforms are shown in Section 1.

- **Separate Supply Voltage Pins for Isolation of Frequency Control Inputs and Oscillators from Output Circuitry**
- **Highly Stable Operation over Specified Temperature and/or Supply Voltage Ranges**

DEVICE TYPE	SIMILAR TO	NUMBER VCO's	COMP'L Z OUT	ENABLE	RANGE INPUT	R_{ext}
'LS624	**'LS324**	**single**	**yes**	**yes**	**yes**	**no**
'LS625	**'LS325**	**dual**	**yes**	**no**	**no**	**no**
'LS626	'LS326	dual	yes	yes	no	no
'LS627	'LS327	dual	no	no	no	no
'LS628	'LS324	single	yes	yes	yes	yes
'LS629	**'LS124**	**dual**	**no**	**yes**	**yes**	**no**

description

These voltage-controlled oscillators (VCOs) are improved versions of the original VCO family: SN54LS124, SN54LS324 thru SN54LS327, SN74LS124, and SN74LS324 thru SN74LS327. These new devices feature improved voltage-to-frequency linearity, range, and compensation. With the exception of the 'LS624 and 'LS628, all of these devices feature two independent VCOs in a single monolithic chip. The 'LS624, 'LS625, 'LS626, and 'LS628 have complementary Z outputs. The output frequency for each VCO is established by a single external component (either a capacitor or crystal) in combination with voltage-sensitive inputs used for frequency control and frequency range. Each device has a voltage-sensitive input for frequency control; however, the 'LS624, 'LS628, and 'LS629 devices also have one for frequency range. (See Figures 1 thru 6).

The 'LS628 offers more precise temperature compensation than its 'LS624 counterpart. The 'LS624 features a 600 ohm internal timing resistor. The 'LS628 requires a timing resistor to be connected externally across R_{ext} pins. Temperature compensation will be improved dur to the temperature coefficient of the external resistor.

Figure 3 and Figure 6 contain the necessary information to choose the proper capacitor value to obtain the desired operating frequency.

A single 5-volt supply can be used: however, one set of supply voltage and ground pins (V_{CC} and GND) is provided for the enable, synchronization-gating, and output sections, and a separate set (OSC V_{CC} and OSC GND) is provided for the oscillator and associated frequency-control circuits so that effective isolation can be accomplished in the system. For operation of frequencies greater than 10 MHz, it is recommended that two independent supplies be used. Disabling either VCO of the 'LS625 and 'LS625 and 'LS627 can be achieved by removing the appropriate OSC V_{CC}. An enable input is provided on the 'LS624, 'LS626, 'LS628, and 'LS629. When the enable input is low, the output is enabled: when the enable input is high, the internal oscillator is disabled, Y is high, and Z is low. Caution! Crosstalk may occur in the dual devices ('LS625, 'LS626, 'LS627 and 'LS629) when both VCOs are operated simultaneously. To minimize crosstalk, either of the following are recommended: (A) If frequencies are widely separated, use a 10-μh inductor between V_{CC} pins. (B) If frequencies are closely spaced, use two separate V_{CC} supplies or place two series diodes between the V_{CC} pins.

The pulse-synchronization-gating section ensures that the first output pulse is neither clipped nor extended. The duty cycle of the square-wave output is fixed at approximately 50 percent.

The SN54LS624 thru SN54LS629 are characterized for operation over the full military temperature range of −55°C to 125°C. The SN74LS624 thru SN74LS629 are characterized for operation from 0°C to 70°C.

PRODUCTION DATA documents contain information current as of publication date. Products conform to specifications per the terms of Texas Instruments standard warranty. Production processing does not necessarily include testing of all parameters.

SN54LS624 . . . J OR W PACKAGE
SN74LS624 . . . D OR N PACKAGE
(TOP VIEW)

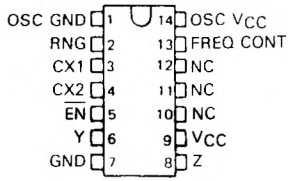

SN54LS625 . . . J OR W PACKAGE
SN74LS625 . . . D OR N PACKAGE
(TOP VIEW)

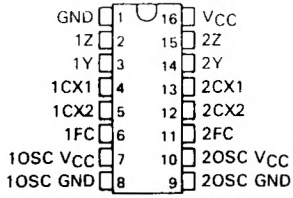

SN54LS626 . . . J OR W PACKAGE
SN74LS626 . . . D OR N PACKAGE
(TOP VIEW)

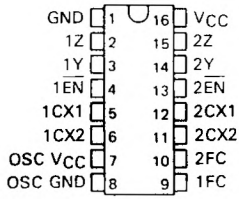

NC – No internal connection

SN54LS624 . . . FK PACKAGE
(TOP VIEW)

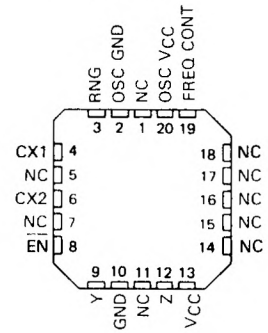

SN54LS625 . . . FK PACKAGE
(TOP VIEW)

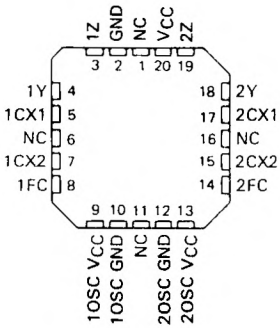

SN54LS626 . . . FK PACKAGE
(TOP VIEW)

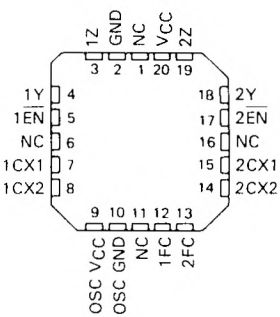

2 TTL Devices

TEXAS INSTRUMENTS
POST OFFICE BOX 655012 • DALLAS, TEXAS 75265

SN54LS627 . . . J OR W PACKAGE
SN74LS627 . . . D OR N PACKAGE
(TOP VIEW)

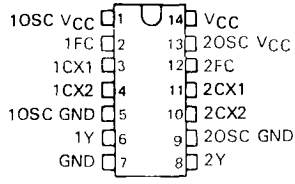

SN54LS628 . . . J OR W PACKAGE
SN74LS628 . . . D OR N PACKAGE
(TOP VIEW)

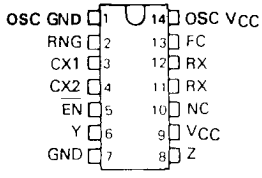

SN54LS629 . . . J OR W PACKAGE
SN74LS629 . . . D OR N PACKAGE
(TOP VIEW)

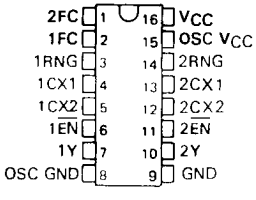

NC-No internal connection

SN54LS627 . . . FK PACKAGE
(TOP VIEW)

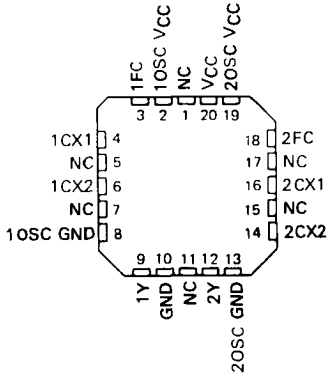

SN54LS628 . . . FK PACKAGE
(TOP VIEW)

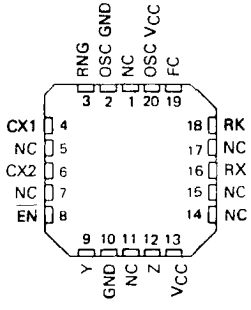

SN54LS629 . . . FK PACKAGE
(TOP VIEW)

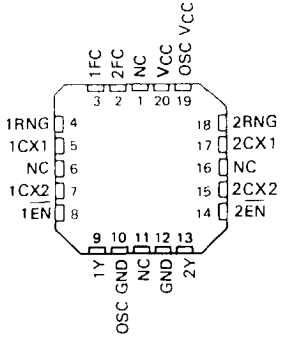

2 TTL Devices

logic diagram (positive logic)

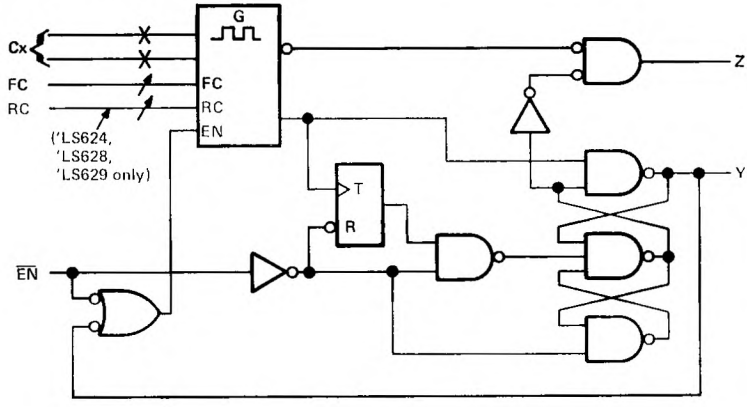

logic symbols†

'LS624

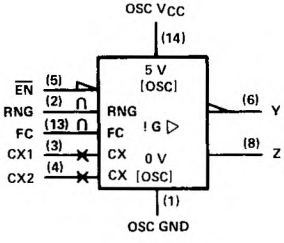

'LS625

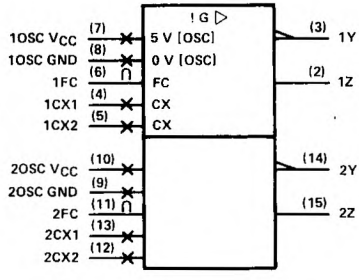

'LS626

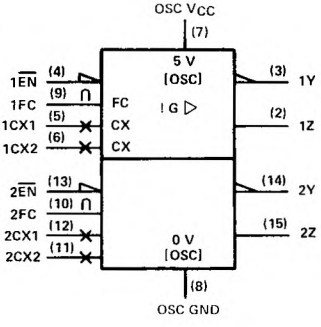

'LS627

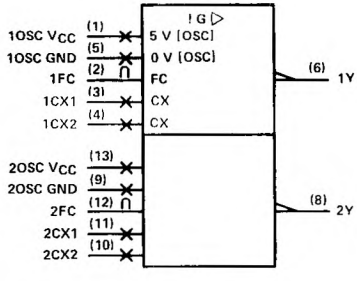

'LS628

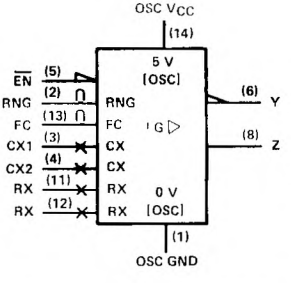

'LS629

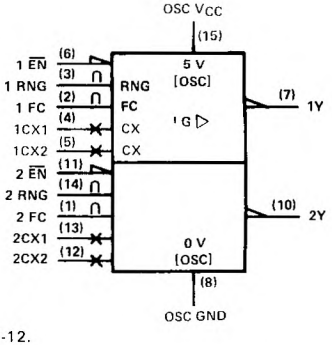

†These symbols are in accordance with ANSI/IEEE Std. 91-1984 and IEC Publication 617-12.
Pin numbers shown are for D, J, N, and W packages.

TEXAS INSTRUMENTS
POST OFFICE BOX 655012 • DALLAS, TEXAS 75265

schematics of inputs and outputs

EQUIVALENT OF EACH ENABLE INPUT ('LS624, 'LS626, 'LS628, AND 'LS629)

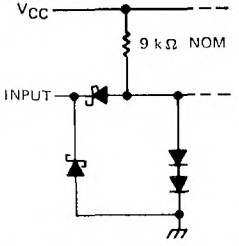

EQUIVALENT OF EACH FREQUENCY CONTROL OR ('LS624, 'LS628, AND 'LS629) RANGE INPUT

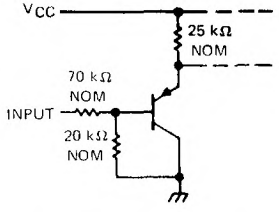

TYPICAL OF ALL OUTPUTS

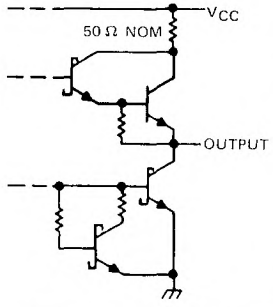

absolute maximum ratings over operating free-air temperature range (unless otherwise noted)

Supply voltage, V_{CC} (see Notes 1 and 2) . . . . . 7 V
Input voltage: Enable input† . . . . . 7 V
Frequency control or range input‡ . . . . . V_{CC}
Operating free-air temperature range: SN54LS' Circuits . . . . . −55°C to 125°C
SN74LS' Circuits . . . . . 0°C to 70°C
Storage temperature range . . . . . −65°C to 150°C

† The enable input is provided only on the 'LS624, 'LS626, 'LS628, and 'LS629.
‡ The range input is provided only on 'LS624, 'LS628, and 'LS629.

NOTE: 1. Voltage values are with respect to the appropriate ground terminal.
2. Throughout the data sheet, the symbol V_{CC} is used for the voltage applied to both the V_{CC} and OSC V_{CC} terminals, unless otherwise noted.

recommended operating conditions

	SN54LS'			SN74LS'			UNIT
	MIN	NOM	MAX	MIN	NOM	MAX	
Supply voltage, V_{CC}	4.5	5	5.5	4.75	5	5.25	V
Input voltage at frequency control or range input, $V_{I(freq)}$ or $V_{I(rng)}$¶	0		5	0		5	V
High-level output current, I_{OH}			−1.2			−1.2	mA
Low-level output current, I_{OL}			12			24	mA
Output frequency, f_o	1			1			Hz
			20			20	MHz
Operating free-air temperature, T_A	−55		125	0		70	°C

electrical characteristics over recommended operating free-air temperature range (unless otherwise noted)

PARAMETER			TEST CONDITIONS†		SN54LS' MIN	SN54LS' TYP‡	SN54LS' MAX	SN74LS' MIN	SN74LS' TYP‡	SN74LS' MAX	UNIT
V_{IH}	High-level input voltage at enable#				2			2			V
V_{IL}	Low-level input voltage at enable#						0.7			0.8	V
V_{IK}	Input clamp voltage at enable#		V_{CC} = MIN, I_I = −18 mA				−1.5			−1.5	V
V_{OH}	High-level output voltage		V_{CC} = MIN, I_{OH} = −1.2 mA, $\overline{EN}$ at V_{IL} max, See Note 3		2.5	3.4		2.7	3.4		V
V_{OL}	Low-level output voltage		V_{CC} = MIN, $\overline{EN}$ at V_{IL} max, See Note 3	I_{OL} = 12 mA		0.25	0.4		0.25	0.4	V
				I_{OL} = 24 mA					0.35	0.5	
I_I	Input current	Freq control or range¶	V_{CC} = MAX	V_I = 5 V		50	250		50	250	µA
				V_I = 1 V		10	50		10	50	
I_I	Input current at maximum input voltage	Enable#	V_{CC} = MAX, V_I = 7 V				0.2			0.2	mA
I_{IH}	High-level input current	Enable#	V_{CC} = MAX, V_I = 2.7 V				40			40	µA
I_{IL}	Low-level input current	Enable#	V_{CC} = MAX, V_I = 0.4 V				−0.8			−0.8	mA
I_{OS}	Short-circuit output current§		V_{CC} = MAX		−40		−225	−40		−225	mA
I_{CC}	Supply current, total into V_{CC} and OSC V_{CC} pins		V_{CC} = MAX, Enable# = 4.5 V, See Note 4	'LS624		20	35		20	35	mA
				'LS625		35	55		35	55	
				'LS626		35	55		35	55	
				'L •		35	55		35	55	
				'L •		20	35		20	35	
				'LS629		35	55		35	55	

†For conditions shown as MIN or MAX, use the appropriate value specified under recommended operating conditions.
‡All typical values are at V_{CC} = 5 V, T_A = 25°C.
§Not more than one output should be shorted at a time and duration of the short-circuit should not exceed one second.
¶The range input is provided only on the 'LS624, 'LS628, and 'LS629.
#The enable input is provided only on the 'LS624, 'LS626, 'LS628, and 'LS629.

NOTES: 3. V_{OH} for Y outputs and V_{OL} for Z outputs are measured while enable inputs are at V_{IL} MAX, with individual 1-kΩ resistors connected from CX1 to V_{CC} and from CX2 to ground. The resistor connections are reversed for testing V_{OH} for Z outputs and V_{OL} for Y inputs.
4. For 'LS624, 'LS626, 'LS628, and 'LS629, I_{CC} is measured with the outputs disabled and open. For 'LS625 and 'LS627, I_{CC} is measured with one OSC V_{CC} = MAX, and with the other OSC V_{CC} and outputs open.

TEXAS INSTRUMENTS
POST OFFICE BOX 655012 • DALLAS, TEXAS 75265

switching characteristics, V_{CC} = 5 V (unless otherwise noted), R_L = 667 Ω, C_L = 45 pF, T_A = 25 °C

PARAMETER		TEST CONDITIONS		'LS624, 'LS628, 'LS629			'LS625, 'LS626, 'LS627			UNIT
				MIN	TYP	MAX	MIN	TYP	MAX	
f_O	Output frequency	C_{ext} = 50 pF	$V_{I(freq)}$ = 5 V, $V_{I(rng)}$ = 0 V	15	20	25				MHz
			$V_{I(freq)}$ = 1 V, $V_{I(rng)}$ = 5 V	1.1	1.6	2.1				
			$V_{I(freq)}$ = 5 V				7	9.5	12	
			$V_{I(freq)}$ = 0 V				0.9	1.2	1.5	

TYPICAL CHARACTERISTICS

'LS624, 'LS628, 'LS629

OUTPUT FREQUENCY
vs
FREQUENCY-CONTROL INPUT VOLTAGE†

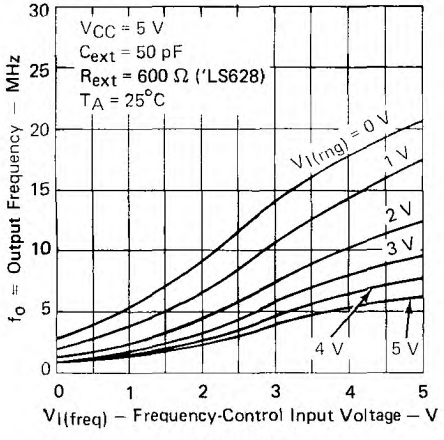

FIGURE 1

'LS624, 'LS628, 'LS629

OUTPUT FREQUENCY
vs
FREQUENCY-CONTROL INPUT VOLTAGE†

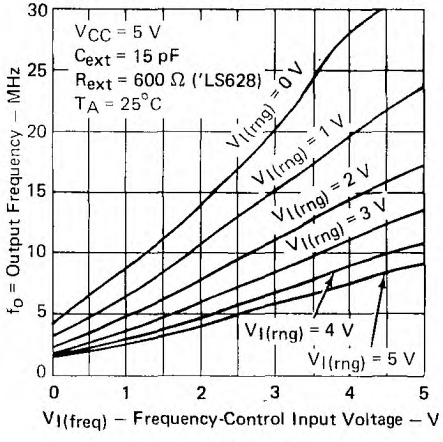

FIGURE 2

†Due to the effects of stray capacitance the output frequency may be unstable when the frequency control voltage is less than 1 volt.

TYPICAL CHARACTERISTICS

'LS624, 'LS628, 'LS629

OUTPUT FREQUENCY
vs
EXTERNAL CAPACITANCE

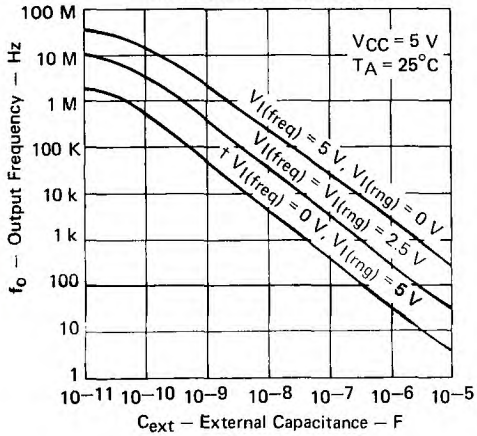

FIGURE 3

'LS625, 'LS626, 'LS627

OUTPUT FREQUENCY
vs
FREQUENCY-CONTROL INPUT VOLTAGE †

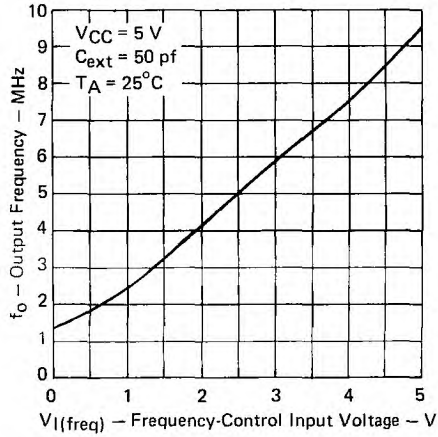

FIGURE 4

'LS625, 'LS626, 'LS627

OUTPUT FREQUENCY
vs
FREQUENCY-CONTROL INPUT VOLTAGE

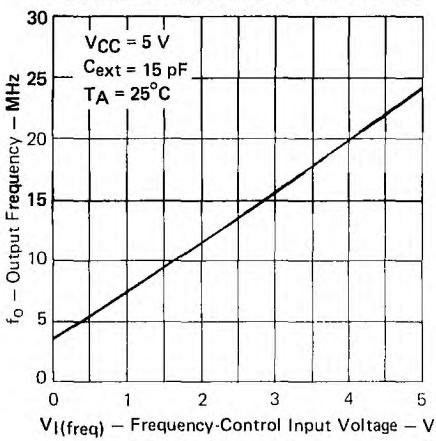

FIGURE 5

'LS625, 'LS626, 'LS627

OUTPUT FREQUENCY
vs
EXTERNAL CAPACITANCE

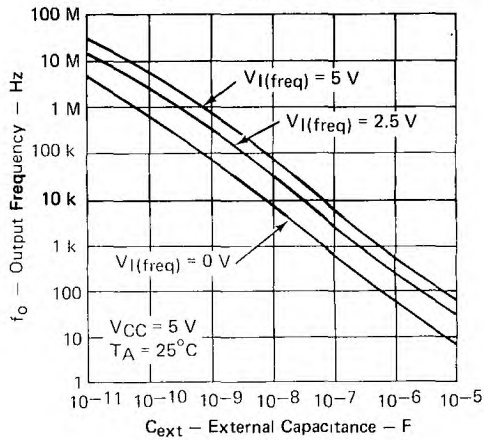

FIGURE 6

† Due to the effects of stray capacitance the output frequency may be unstable when the frequency control voltage is less than 1 volt.

TEXAS INSTRUMENTS
POST OFFICE BOX 655012 • DALLAS, TEXAS 75265

TYPICAL CHARACTERISTICS

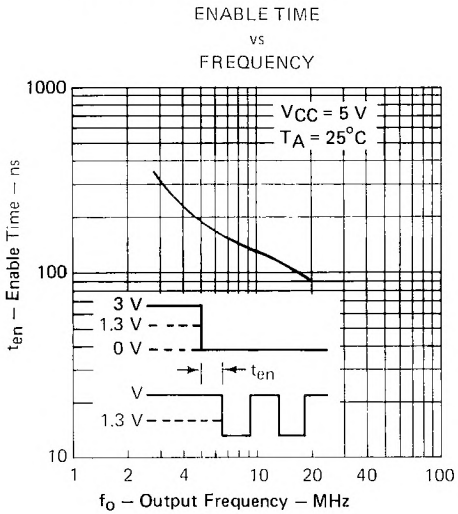

FIGURE 7

TYPICAL APPLICATIONS DATA

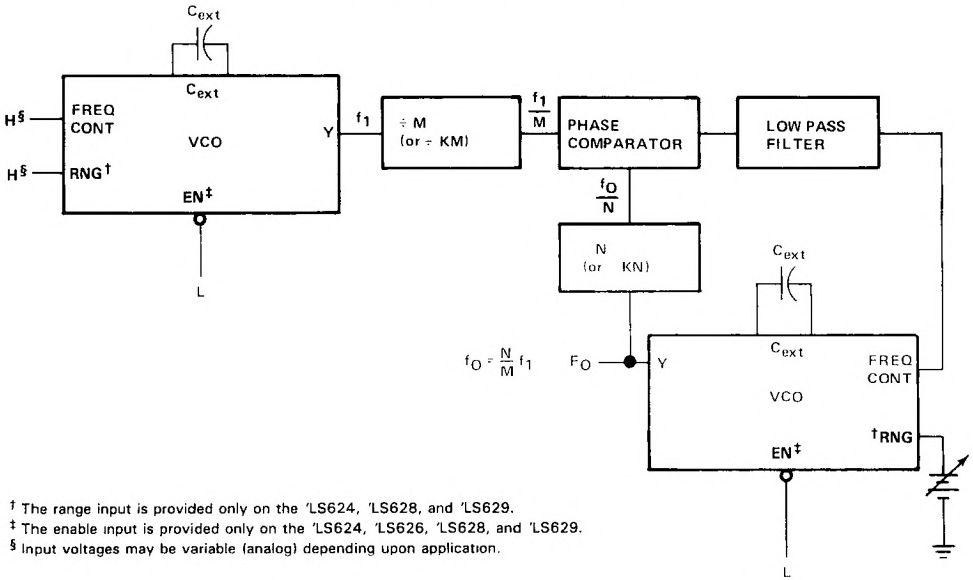

† The range input is provided only on the 'LS624, 'LS628, and 'LS629.
‡ The enable input is provided only on the 'LS624, 'LS626, 'LS628, and 'LS629.
§ Input voltages may be variable (analog) depending upon application.

FIGURE A–PHASE-LOCKED LOOP

(TIM99630)

- **Detects and Corrects Single-Bit Errors**
- **Detects and Flags Dual-Bit Errors**
- **Fast Processing Times:**
  Write Cycle: Generates Check Word in 45 ns Typical
  Read Cycle: Flags Errors in 27 ns Typical
- **Power Dissipation 600 mW Typical**

SN54LS630, . . . JD PACKAGE
SN74LS630 . . . N PACKAGE
(TOP VIEW)

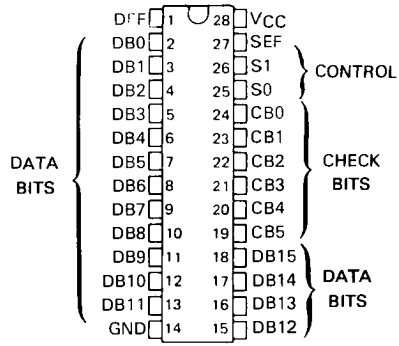

SN54LS630 . . . FK PACKAGE
(TOP VIEW)

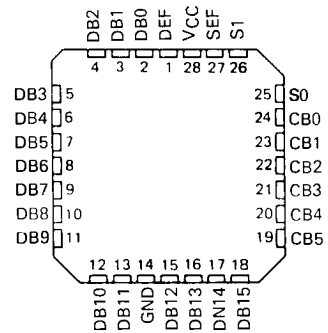

description

The 'LS630 device is a 16-bit parallel error detection and correction circuit (EDAC) in a 28-pin, 600-mil package. It uses a modified Hamming code to generate a 6-bit check word from a 16-bit data word. This check word is stored along with the data word during the memory write cycle. During the memory read cycle, the 22-bit words from memory are processed by the EDAC to determine if errors have occurred in memory.

Single-bit errors in the 16-bit data word are flagged and corrected.

Single-bit errors in the 6-bit check word are flagged, and the CPU sends the EDAC through the correction cycle even though the 16-bit word is not in error. The correction cycle will simply pass along the original 16-bit word in this case and produce error syndrome bits to pinpoint the error-generating location.

Dual-bit errors are flagged but not corrected. These dual errors may occur in any two bits of the 22-bit word from memory (two errors in the 16-bit data word, two errors in the 6-bit check word, or one error in each word).

The gross-error condition of all lows or all highs from memory will be detected. Otherwise, errors in three or more bits of the 22-bit word are beyond the capabilities of these devices to detect.

CONTROL FUNCTION TABLE

Memory Cycle	Control S1	Control S0	EDAC Function	Data I/O	Check Word I/O	Error Flags SEF	Error Flags DEF
WRITE	L	L	Generate Check Word	Input Data	Output Check Word	L	L
READ	L	H	Read Data & Check Word	Input Data	Input Check Word	L	L
READ	H	H	Latch & Flag Errors	Latch Data	Latch Check Word	Enabled	
READ	H	L	Correct Data Word & Generate Syndrome Bits	Output Corrected Data	Output Syndrome Bits	Enabled	

PRODUCTION DATA documents contain information current as of publication date. Products conform to specifications per the terms of Texas Instruments standard warranty. Production processing does not necessarily include testing of all parameters.

functional block diagram

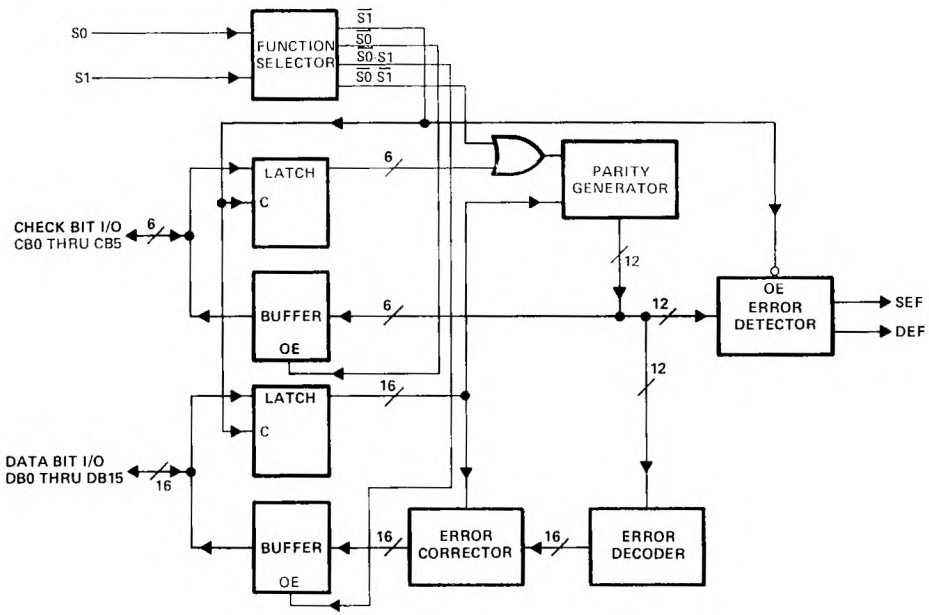

ERROR FUNCTION TABLE

Total Number of Errors		Error Flags		Data Correction
16-Bit Data	6-Bit Checkword	SEF	DEF	
0	0	L	L	Not Applicable
1	0	H	L	Correction
0	1	H	L	Correction
1	1	H	H	Interrupt
2	0	H	H	Interrupt
0	2	H	H	Interrupt

In order to be able to determine whether the data from the memory is acceptable to use as presented to the bus, the EDAC must be strobed to enable the error flags and the flags will have to be tested for the zero condition.

The first case in the error function table represents the normal, no-error condition. The CPU sees lows on both flags. The next two cases of single-bit errors require data correction. Although the EDAC can discern the single check bit error and ignore it, the error flags are identical to the single error in the 16-bit data word. The CPU will ask for data correction in both cases. An interrupt condition to the CPU results in each of the last three cases, where dual errors occur.

error detection and correction details

During a memory write cycle, six check bits (CB0-CB5) are generated by eight-input parity generators using the data bits as defined below. During a memory read cycle, the 6-bit check word is retrieved along with the actual data.

TEXAS INSTRUMENTS
POST OFFICE BOX 655012 • DALLAS, TEXAS 75265

CHECKWORD	16-BIT DATA WORD															
BIT	0	1	2	3	4	5	6	7	8	9	10	11	12	13	14	15
CB0	x	x		x	x				x	x	x			x		
CB1	x		x	x		x	x		x			x			x	
CB2		x	x		x	x		x		x			x			x
CB3	x	x	x				x	x			x	x	x			
CB4				x	x	x	x	x						x	x	x
CB5									x	x	x	x	x	x	x	x

The six check bits are parity bits derived from the matrix of data bits as indicated by "x" for each bit.

Error detection is accomplished as the 6-bit check word and the 16-bit data word from memory are applied to internal parity generators/checkers. If the parity of all six groupings of data and check bits are correct, it is assumed that no error has occurred and both error flags will be low. (It should be noted that the sense of two of the check bits, bits CB0 and CB1, is inverted to ensure that the gross-error condition of all lows and all highs is detected.)

If the parity of one or more of the check groups is incorrect, an error has occurred and the proper error flag or flags will be set high. Any single error in the 16-bit data word will change the sense of exactly three bits of the 6-bit check word. Any single error in the 6-bit check word changes the sense of only that one bit. In either case, the single error flag will be set high while the dual error flag will remain low.

Any two-bit error will change the sense of an even number of check bits. The two-bit error is not correctable since the parity tree can only identify single-bit errors. Both error flags are set high when any two-bit error is detected.

Three or more simultaneous bit errors can fool the EDAC into believing that no error, a correctable error, or an uncorrectable error has occurred and produce erroneous results in all three cases.

Error correction is accomplished by identifying the bad bit and inverting it. Identification of the erroneous bit is achieved by comparing the 16-bit data word and 6-bit check word from memory with the new check word with one (check word error) or three (data word error) inverted bits.

As the corrected word is made available on the data word I/O port, the check word I/O port presents a 6-bit syndrome error code. This syndrome code can be used to identify the bad memory chip.

ERROR SYNDROME TABLE

ERROR LOCATION	SYNDROME ERROR CODE					
	CB0	CB1	CB2	CB3	CB4	CB5
	L	L	H	L	H	H
DB1	L	H	L	L	H	H
DB2	H	L	L	L	H	H
DB3	L	L	H	H	L	H
DB4	L	H	L	H	L	H
DB5	H	L	L	H	L	H
DB6	H	L	H	L	L	H
DB7	H	H	L	L	L	H
DB8	L	L	H	H	H	L
DB9	L	H	L	H	H	L
DB10	L	H	H	L	H	L
DB11	H	L	H	L	H	L
DB12	H	H	L	L	H	L
DB13	L	H	H	H	L	L
DB14	H	L	H	H	L	L
DB15	H	H	L	H	L	L
CB0	L	H	H	H	H	H
CB1	H	L	H	H	H	H
CB2	H	H	L	H	H	H
CB3	H	H	H	L	H	H
CB4	H	H	H	H	L	H
CB5	H	H	H	H	H	L
NO ERROR	H	H	H	H	H	H

schematics of inputs and outputs

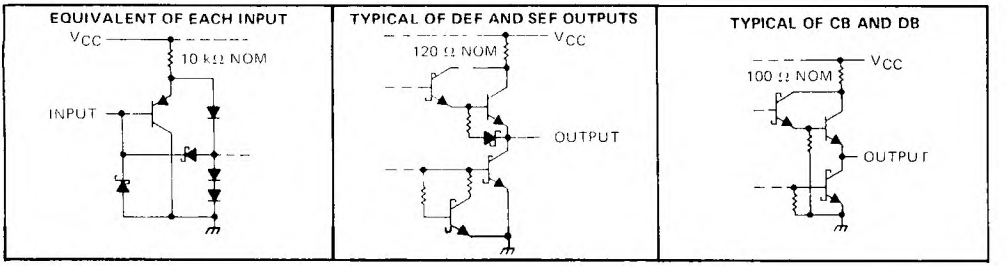

absolute maximum ratings over operating free-air temperature range (unless otherwise noted)

Supply voltage, V_{CC} (see Note 1) . . . . . 7 V
Input voltage: S0 and S1 . . . . . 7 V
CB and DB . . . . . 5.5 V
Off-state output voltage . . . . . 5.5 V
Operating free-air temperature range: SN54LS630 . . . . . −55°C to 125°C
SN74LS630 . . . . . 0°C to 70°C
Storage temperature range . . . . . −65°C to 150°C

NOTE 1: Voltage values are with respect to network ground terminal.

recommended operating conditions

			SN54LS630			SN74LS630			UNIT
			MIN	NOM	MAX	MIN	NOM	MAX	
V_{CC}	Supply voltage		4.5	5	5.5	4.75	5	5.25	V
I_{OH}	High-level output current	CB or DB, 'LS631 only			−1			−1	mA
		or SEF			−0.4			−0.4	
V_{OH}	High-level output voltage	CB or DB, 'LS631 only			5.5			5.5	V
I_{OL}	Low-level output current	CB or DB			12			24	mA
		or SEF			4			8	
t_{su}	Setup time	CB or DB before S1↑ †	15			15			ns
		CB or DB before S1↑ ‡	45			45			
t_h	Hold time	CB or DB after S1↑	15			15			ns
T_A	Operating free-air temperature		−55		125	0		70	°C

† This time guarantees the input data and checkword will be latched.
‡ This time guarantees the input data and checkword will be latched plus that no glitch will occur on SEF or DEF flags.
↑ The upward-pointing arrow indicates a transition from low to high

TEXAS INSTRUMENTS
POST OFFICE BOX 655012 • DALLAS, TEXAS 75265

electrical characteristics over recommended operating free-air temperature range (unless otherwise noted)

PARAMETER			TEST CONDITIONS†		SN54LS630			SN74LS630			UNIT
					MIN	TYP‡	MAX	MIN	TYP‡	MAX	
V_{IH}	High-level input voltage				2			2			V
V_{IL}	Low-level input voltage						0.7			0.8	V
V_{IK}	Input clamp voltage		V_{CC} = MIN,	I_I = −18 mA			−1.5			−1.5	V
V_{OH}	High-level output voltage	CB or DB	V_{CC} = MIN, V_{IH} = 2 V, V_{IL} = V_{IL} min	I_{OH} = MAX	2.4	3.3		2.4	3.2		V
		DEF or SEF		I_{OH} = −400 μA	2.5	3.4		2.7	3.4		
V_{OL}	Low-level output voltage	CB or DB	V_{CC} = MIN, V_{IH} = 2 V, V_{IL} = V_{IL} max	I_{OL} = 12 mA		0.25	0.4		0.25	0.4	V
				I_{OL} = 24 mA					0.35	0.5	
		DEF or SEF		I_{OL} = 4 mA		0.25	0.4		0.25	0.4	
				I_{OL} = 8 mA					0.35	0.5	
I_{OZH}	Off-state output current, high-level voltage applied	CB or DB	V_{CC} = MAX, S0 and S1 at 2 V	V_O = 2.7 V,			20			20	μA
I_{OZL}	Off-state output current, low-level voltage applied	CB or DB	V_{CC} = MAX, S0 and S1 at 2 V	V_O = 0.4 V,			−200			−200	μA
I_I	Input current at maximum input voltage	CB or DB	V_{CC} = MAX, V_{IH} = 4.5 V	V_I = 5.5 V			0.1			0.1	mA
		S0 or S1		V_I = 7 V			0.1			0.1	
I_{IH}	High-level input current		V_{CC} = MAX,	V_I = 2.7 V			20			20	μA
I_{IL}	Low-level input current		V_{CC} = MAX,	V_I = 0.4 V			−0.2			−0.2	mA
I_{OS}§	Short-circuit output current	CB or DB	V_{CC} = MAX		−30		−130	−30		−130	mA
		DEF or SEF			−20		−100	−20		−100	
I_{CC}	Supply current		V_{CC} = MAX, S0 and S1 at 4.5 V, All CB and DB pins grounded, DEF and SEF open			143	230		143	230	mA

† For conditions shown as MIN or MAX, use the appropriate value specified under recommended operating conditions.
‡ All typical values are at V_{CC} = 5 V, T_A = 25°C.
§ Not more than one output should be shorted at a time, and duration of the short circuit should not exceed one second.

switching characteristics, V_{CC} = 5 V, T_A = 25°C, C_L = 45 pF

PARAMETER	FROM (INPUT)	TO (OUTPUT)	TEST CONDITIONS	'LS630 MIN	'LS630 TYP	'LS630 MAX	UNIT
t_{PLH} Propagation delay time, low-to-high-level output†	DB	CB	S0 at 0 V, S1 at 0 V, R_L = 667 Ω, See Figure 1		31	65	ns
t_{PHL} Propagation delay time, high-to-low-level output†					45	65	ns
t_{PLH} Propagation delay time, low-to-high-level output‡	S1↑	DEF	S0 at 3 V, R_L = 2 kΩ, See Figure 1		27	40	ns
		SEF			20	30	
t_{PZH} Output enable time to high level§	S0↓	CB, DB	S1 at 3 V, R_L = 667 Ω, See Figure 2		24	40	ns
t_{PZL} Output enable time to low level§	S0↓	CB, DB	S1 at 3 V, R_L = 667 Ω, See Figure 1		30	45	ns
t_{PHZ} Output disable time from high level¶	S0↑	CB, DB	S1 at 3 V, R_L = 667 Ω, See Figure 2		43	65	ns
t_{PLZ} Output disable time from low level¶	S0↑	CB, DB	S1 at 3 V, R_L = 667 Ω, See Figure 1		31	65	ns

† These parameters describe the time intervals taken to generate the check word during the memory write cycle.
‡ These parameters describe the time intervals taken to flag errors during the memory read cycle.
§ These parameters describe the time intervals taken to correct and output the data word and to generate and output the syndrome error code during the memory read cycle.
¶ These parameters describe the time intervals taken to disable the CB and DB buses in preparation for a new data word during the memory read cycle.

PARAMETER MEASUREMENT INFORMATION

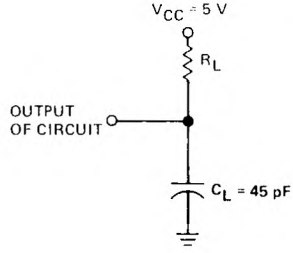

FIGURE 1–OUTPUT LOAD CIRCUIT

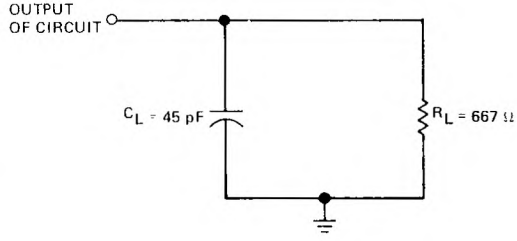

FIGURE 2–OUTPUT LOAD CIRCUIT

TEXAS INSTRUMENTS
POST OFFICE BOX 655012 • DALLAS, TEXAS 75265

typical operating sequences

READ, FLAG, AND CORRECT MODE SWITCHING WAVEFORMS

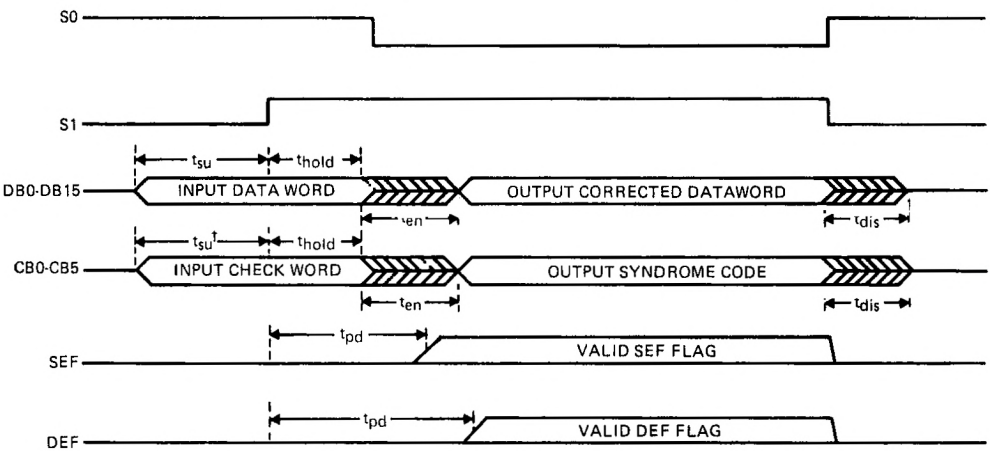

† NOTE: There are two conditions specified for t_{su} of Data or Checkword before S1↑. See recommended operating conditions for details.

D2728, APRIL 1983—REVISED MARCH 1988

- **Detects and Corrects Single-Bit Errors**
- **Detects and Flags Dual-Bit Errors**
- **Fast Processing Times:**
  - **Write Cycle: Generates Check Word in 45 ns Typical**
  - **Read Cycle: Flags Errors in 27 ns Typical**
- **Power Dissipation 500 mW Typical**
- **Choice of Output Configurations:**
  - **'LS636 . . . 3-State**
  - **'LS637 . . . Open Collector**

SN54LS' . . . J PACKAGE
SN74LS' . . . DW OR N PACKAGE
(TOP VIEW)

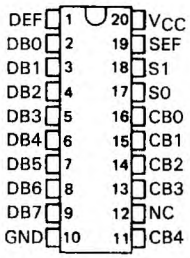

SN54LS' . . . FK PACKAGE
(TOP VIEW)

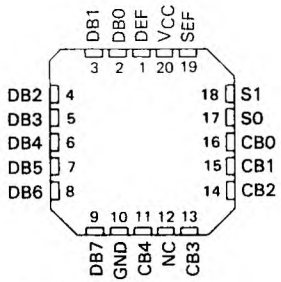

NC—No internal connection.

description

The 'LS636 and 'LS637 devices are 8-bit parallel error detection and correction circuits (EDACs) in 20-pin, 300-mil packages. They use a modified Hamming code to generate a 5-bit check word from an 8-bit data word. This check word is stored along with the data word during the memory write cycle. During the memory read cycle, the 13-bit words from memory are processed by the EDACs to determine if errors have occurred in memory.

Single-bit errors in the 8-bit data word are flagged and corrected.

Single-bit errors in the 5-bit check word are flagged, and the CPU sends the EDAC through the correction cycle even though the 8-bit word is not in error. The correction cycle will simply pass along the original 8-bit word in this case and produce error syndrome bits to pinpoint the error-generating location.

Dual-bit errors are flagged but not corrected. These dual errors may occur in any two bits of the 13-bit word from memory (two errors in the 8-bit data word, two errors in the 5-bit check word, or one error in each word).

The gross-error condition of all highs from memory will be detected. Otherwise, errors in three or more bits of the 13-bit word are beyond the capabilities of these devices to detect.

CONTROL FUNCTION TABLE

MEMORY CYCLE	CONTROL S1	CONTROL S0	EDAC FUNCTION	DATA I/O	CHECK WORD I/O	ERROR FLAGS SEF	ERROR FLAGS DEF
WRITE	L	L	Generate Check Word	Input Data	Output Check Word	L	L
READ	L	H	Read Data & Check Word	Input Data	Input Check Word	L	L
READ	H	H	Latch & Flag Errors	Latch Data	Latch Check Word	Enabled	
READ	H	L	Correct Data Word & Generate Syndrome Bits	Output Corrected Data	Output Syndrome Bits	Enabled	

PRODUCTION DATA documents contain information current as of publication date. Products conform to specifications per the terms of Texas Instruments standard warranty. Production processing does not necessarily include testing of all parameters.

functional block diagram

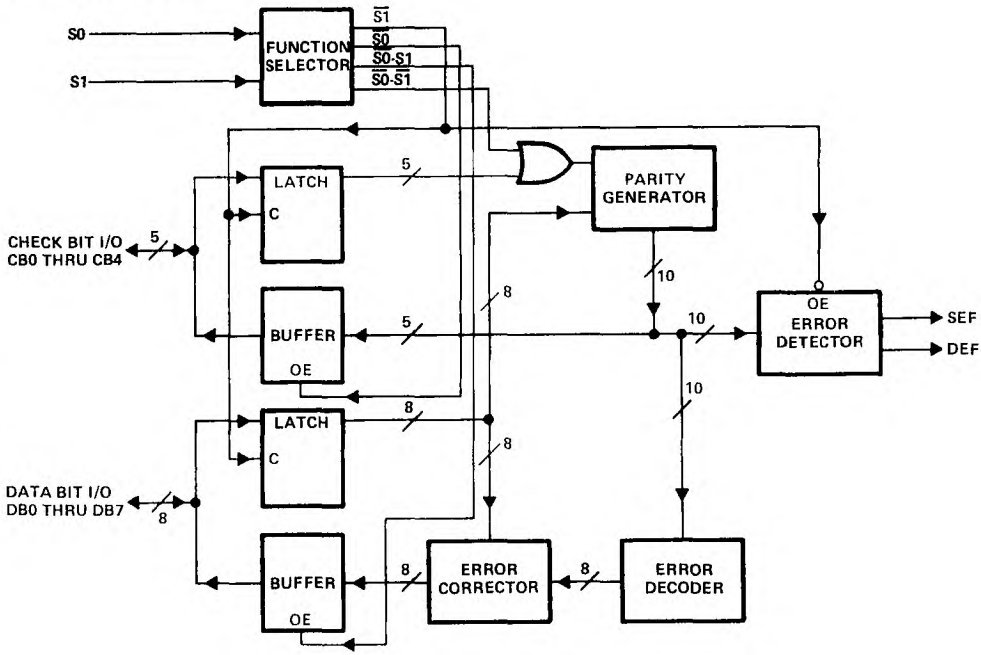

ERROR FUNCTION TABLE

TOTAL NUMBER OF ERRORS		ERROR FLAGS		DATA
8-BIT DATA	5-BIT CHECK WORD	SEF	DEF	CORRECTION
0	0	L	L	Not Applicable
1	0	H	L	Correction
0	1	H	L	Correction
1	1	H	H	Interrupt
2	0	H	H	Interrupt
0	2	H	H	Interrupt

In order to be able to determine whether the data from the memory is acceptable to use as presented to the bus, the EDAC must be strobed to enable the error flags and the flags will have to be tested for the zero condition.

The first case in the error function table represents the normal, no-error condition. The CPU sees lows on both flags. The next two cases of single-bit errors require data correction. Although the EDAC can discern the single check bit error and ignore it, the error flags are identical to the single error in the 8-bit data word. The CPU will ask for data correction in both cases. An interrupt condition to the CPU results in each of the last three cases, where dual errors occur.

error detection and correction details

During a memory write cycle, five check bits (CB0-CB4) are generated by eight-input parity generators using the data bits as defined below. During a memory read cycle, the 5-bit check word is retrieved along with the 8-bit data word.

TEXAS INSTRUMENTS
POST OFFICE BOX 655012 • DALLAS, TEXAS 75265

CHECKWORD	8-BIT DATA WORD							
BIT	0	1	2	3	4	5	6	7
CB0	X	X		X	X			
CB1	X		X	X		X	X	
CB2		X	X		X	X		X
CB3	X	X	X				X	X
CB4				X	X	X	X	X

The five check bits are parity bits derived from the matrix of data bits as indicated by "X" for each bit.

Error detection is accomplished as the 5-bit check word and the 8-bit data word from memory are applied to internal parity generators/checkers. If the parity of all five groupings of data and check bits are correct, it is assumed that no error has occurred and both error flags will be low.

If the parity of one or more of the check groups is incorrect, an error has occurred and the proper error flag or flags will be set high. Any single error in the 8-bit data word will change the sense of exactly three bits of the 5-bit check word. Any single error in the 5-bit check word changes the sense of only that one bit. In either case, the single error flag will be set high while the dual error flag will remain low.

Any two-bit error will change the sense of an even number of check bits. The two-bit error is not correctable since the parity tree can only identify single-bit errors. Both error flags are set high when any two-bit error is detected.

Three or more simultaneous bit errors can fool the EDAC into believing that no error, a correctable error, or an uncorrectable error has occurred and produce erroneous results in all three cases.

Error correction is accomplished by identifying the bad bit and inverting it. Identification of the erroneous bit is achieved by comparing the 8-bit data word and 5-bit check word from memory with the new check word with one (check word error) or three (data word error) inverted bits.

As the corrected word is made available on the data word I/O port, the check word I/O port presents a 5-bit syndrome error code. This syndrome code can be used to identify the bad memory chip.

ERROR SYNDROME TABLE

ERROR LOCATION	SYNDROME ERROR CODE				
	CB0	CB1	CB2	CB3	CB4
DB0	L	L	H	L	H
DB1	L	H	L	L	H
DB2	H	L	L	L	H
DB3	L	L	H	H	L
DB4	L	H	L	H	L
DB5	H	L	L	H	L
DB6	H	L	H	L	L
DB7	H	H	L	L	L
CB0	L	H	H	H	H
CB1	H	L	H	H	H
CB2	H	H	L	H	H
CB3	H	H	H	L	H
CB4	H	H	H	H	L
NO ERROR	H	H	H	H	H

schematics of inputs and outputs

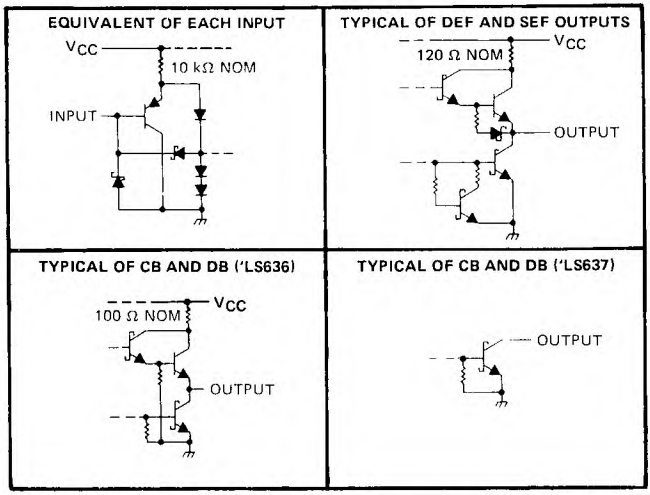

absolute maximum ratings over operating free-air temperature range (unless otherwise noted)

Supply voltage, V_{CC} (see Note 1)		7 V
Input voltage: S0 and S1		7 V
CB and DB		5.5 V
Off-state output voltage		5.5 V
Operating free-air temperature range:	SN54LS636, SN54LS637	−55°C to 125°C
	SN74LS636, SN74LS637	0°C to 70°C
Storage temperature range		−65°C to 150°C

NOTE 1: Voltage values are with respect to network ground terminal.

recommended operating conditions

			SN54LS636 SN54LS637			SN74LS636 SN74LS637			UNIT
			MIN	NOM	MAX	MIN	NOM	MAX	
V_{CC}	Supply voltage		4.5	5	5.5	4.75	5	5.25	V
I_{OH}	High-level output current	CB or DB, 'LS636 only			−1			−1	mA
		DEF or SEF			−0.4			−0.4	
V_{OH}	High-level output voltage	CB or DB, 'LS637 only			5.5			5.5	V
I_{OL}	Low-level output current	CB or DB			12			24	mA
		DEF or SEF			4			8	
t_{su}	Setup time	CB or DB before S1↑†	15			15			ns
		CB or DB before S1↑‡	45			45			
t_h	Hold time	CB or DB after S1↑	15			15			ns
T_A	Operating free-air temperature		−55		125	0		70	°C

† This time guarantees the input data and checkword will be latched.
‡ This time guarantees the input data and checkword will be latched plus that no glitch will occur on SEF or DEF flags.
↑ The upward-pointing arrow indicates a transition from low to high.

TEXAS INSTRUMENTS
POST OFFICE BOX 655012 • DALLAS, TEXAS 75265

electrical characteristics over recommended operating free-air temperature range (unless otherwise noted)

PARAMETERS			TEST CONDITIONS†		SN54LS636 MIN	SN54LS636 TYP‡	SN54LS636 MAX	SN74LS636 MIN	SN74LS636 TYP‡	SN74LS636 MAX	UNIT
V_{IH}	High-level input voltage				2			2			V
V_{IL}	Low-level input voltage						0.7			0.8	V
V_{IK}	Input clamp voltage		V_{CC} = MIN,	I_I = −18 mA			−1.5			−1.5	V
V_{OH}	High-level output voltage	CB or DB	V_{CC} = MIN, V_{IH} = 2 V, V_{IL} = V_{IL} max	I_{OH} = MAX	2.4	3.3		2.4	3.2		V
		DEF or SEF		I_{OH} = −400 μA	2.5	3.4		2.7	3.4		
V_{OL}	Low-level output voltage	CB or DB	V_{CC} = MIN, V_{IH} = 2 V, V_{IL} = V_{IL} max	I_{OL} = 12 mA		0.25	0.4		0.25	0.4	V
				I_{OL} = 24 mA					0.35	0.5	
		DEF or SEF		I_{OL} = 4 mA		0.25	0.4		0.25	0.4	
				I_{OL} = 8 mA					0.35	0.5	
I_{OZH}	Off-state output current, high-level voltage applied	CB or DB	V_{CC} = MAX, S0 and S1 at 2 V	V_O = 2.7 V			20			20	μA
I_{OZL}	Off-state output current, low-level voltage applied	CB or DB	V_{CC} = MAX, S0 and S1 at 2 V	V_O = 0.4 V			−0.2			−0.2	mA
I_I	Input current at maximum input voltage	CB or DB	V_{CC} = MAX, V_{IH} = 4.5 V	V_I = 5.5 V			0.1			0.1	mA
		S0 or S1		V_I = 7 V			0.1			0.1	
I_{IH}	High-level input current		V_{CC} = MAX,	V_I = 2.7 V			20			20	μA
I_{IL}	Low-level input current		V_{CC} = MAX,	V_I = 0.4 V			−0.2			−0.2	mA
I_{OS}§	Short-circuit output current	CB or DB	V_{CC} = MAX		−30		−130	−30		−130	mA
		DEF or SEF			−20		−100	−20		−100	
I_{CC}	Supply current		V_{CC} = MAX, S0 and S1 at 4.5 V, All CB and DB pins grounded, DEF and SEF open			100	160		100	160	mA

PARAMETER			TEST CONDITIONS†		SN54LS637 MIN	SN54LS637 TYP‡	SN54LS637 MAX	SN74LS637 MIN	SN74LS637 TYP‡	SN74LS637 MAX	UNIT
V_{IH}	High-level input voltage				2			2			V
V_{IL}	Low-level input voltage						0.7			0.8	V
V_{IK}	Input clamp voltage		V_{CC} = MIN,	I_I = −18 mA			−1.5			−1.5	V
V_{OH}	High-level output voltage	DEF or SEF	V_{CC} = MIN, V_{IH} = 2 V,	I_{OH} = −400 μA, V_{IL} = V_{IL} max	2.5	3.4		2.7	3.4		V
I_{OH}	High-level output current	CB or DB	V_{CC} = MIN, V_{IH} = 2 V,	V_{OH} = 5.5 V, V_{IL} = V_{IL} max			0.1			0.1	mA
V_{OL}	Low-level output voltage	CB or DB	V_{CC} = MIN, V_{IH} = 2 V, V_{IL} = V_{IL} max	I_{OL} = 12 mA		0.25	0.4		0.25	0.4	V
				I_{OL} = 24 mA					0.35	0.5	
		DEF or SEF		I_{OL} = 4 mA		0.25	0.4		0.25	0.4	
				I_{OL} = 8 mA					0.35	0.5	
I_I	Input current at maximum input voltage	CB or DB	V_{CC} = MAX, V_{IH} = 4.5 V	V_I = 5.5 V			0.1			0.1	mA
		S0 or S1		V_I = 7 V			0.1			0.1	
I_{IH}	High-level input current		V_{CC} = MAX	V_I = 2.7 V			20			20	μA
I_{IL}	Low-level input current		V_{CC} = MAX,	V_I = 0.4 V			−0.2			−0.2	mA
I_{OS}§	Short-circuit output current	DEF or SEF	V_{CC} = MAX		−20		−100	−20		−100	mA
I_{CC}	Supply current		V_{CC} = MAX, S0 and S1 at 4.5 V, All CB and DB grounded, SEF and DEF open			90	144		90	144	mA

†For conditions shown as MIN or MAX, use the appropriate value specified under recommended operating conditions.
‡All typical values are at V_{CC} = 5 V, T_A = 25°C.
§Not more than one output should be shorted at a time, and duration of the short circuit should not exceed one second

'LS636 switching characteristics, V_{CC} = 5 V, T_A = 25°C, C_L = 45 pF

PARAMETER	FROM (INPUT)	TO (OUTPUT)	TEST CONDITIONS	'LS636 MIN	TYP	MAX	UNIT
t_{PLH} Propagation delay time, low-to-high-level output†	DB	CB	S0 at 0 V, S1 at 0 V, R_L = 667 Ω, See Figure 1		31	45	ns
t_{PHL} Propagation delay time, high-to-low-level output†					45	65	ns
t_{PLH} Propagation delay time, low-to-high-level output‡	S1↑	DEF	S0 at 3 V, R_L = 2 kΩ, See Figure 1		27	40	ns
		SEF			20	30	
t_{PZH} Output enable time to high level§	S0↓	CB, DB	S1 at 3 V, R_L = 667 Ω, See Figure 2		24	40	ns
t_{PZL} Output enable time to low level§	S0↓	CB, DB	S1 at 3 V, R_L = 667 Ω, See Figure 1		30	45	ns
t_{PHZ} Output disable time from high level¶	S0↑	CB, DB	S1 at 3 V, R_L = 667 Ω, See Figure 2		43	65	ns
t_{PLZ} Output disable time from low level¶	S0↑	CB, DB	S1 at 3 V, R_L = 667 Ω, See Figure 1		31	45	ns

'LS637 switching characteristics, V_{CC} = 5 V, T_A = 25°C, C_L = 45 pF, see Figure 1

PARAMETER	FROM (INPUT)	TO (OUTPUT)	TEST CONDITIONS	'LS637 MIN	TYP	MAX	UNIT
t_{PLH} Propagation delay time, low-to-high level output†	DB	CB	S0 at 0 V, S1 at 0V, R_L = 667 Ω		38	55	ns
t_{PHL} Propagation delay time, high-to-low-level output†					45	65	ns
t_{PLH} Propagation delay time, low-to-high-level output‡	S1↑	DEF	S0 at 3 V, R_L = 2 kΩ		27	40	ns
		SEF			20	30	ns
t_{PHL} Propagation delay time, high-to-low-level output§	S0↓	CB, DB	S1 at 3 V, R_L = 667 kΩ		28	45	ns
t_{PLH} Propagation delay time, low-to-high-level output¶	S0↑	CB, DB	S1 at 3 V, R_L = 667 kΩ		33	50	ns

†These parameters describe the time intervals taken to generate the check word during the memory write cycle.
‡These parameters describe the time intervals taken to flag errors during the memory read cycle.
§These parameters describe the time intervals taken to correct and output the data word and to generate and output the syndrome error code during the memory read cycle.
¶These parameters describe the time intervals taken to disable the CB and DB buses in preparation for a new data word during the memory read cycle.

PARAMETER MEASUREMENT INFORMATION

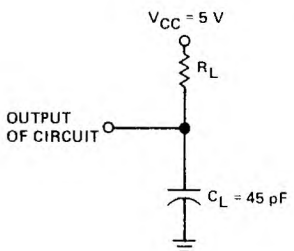

FIGURE 1–OUTPUT LOAD CIRCUIT

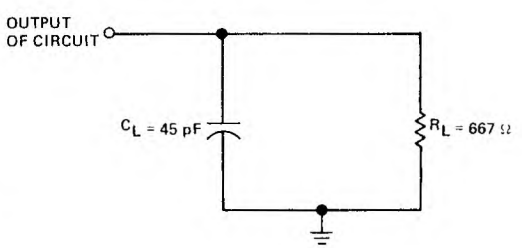

FIGURE 2–OUTPUT LOAD CIRCUIT

TEXAS INSTRUMENTS
POST OFFICE BOX 655012 • DALLAS, TEXAS 75265

typical operating sequences

READ, FLAG, AND CORRECT MODE SWITCHING WAVEFORMS

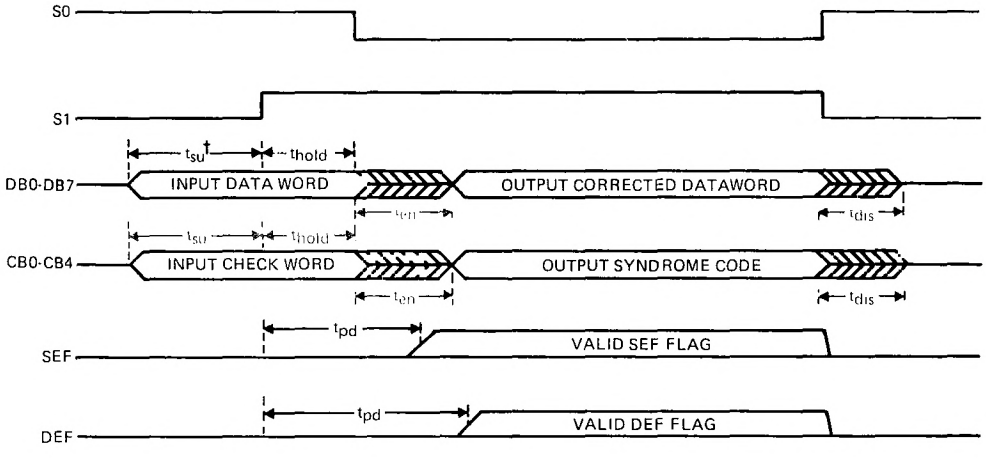

† NOTE: There are two conditions specified for t_{su} of Data or Checkword before S1↑. See recommended operating conditions for detail.

D2636, JANUARY 1981—REVISED MARCH 1988

- Bidirectional Bus Transceivers in High-Density 20-Pin Packages
- Hysteresis at Bus Inputs Improves Noise Margins
- Choice of True or Inverting Logic
- A Bus Outputs are Open-Collector, B Bus Outputs are 3-State

SN54LS638, SN54LS639 . . . J PACKAGE
SN74LS638, SN74LS639 . . . DW OR N PACKAGE
(TOP VIEW)

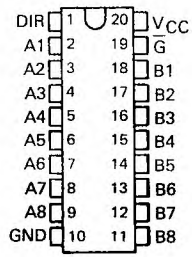

SN54LS638, SN54LS639 . . . FK PACKAGE
(TOP VIEW)

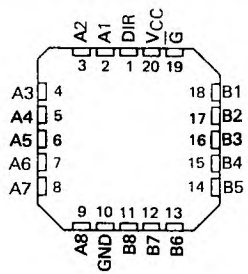

description

These octal bus transceivers are designed for asynchronous two-way communication between open-collector and 3-state buses. The devices transmit data from the A bus (open-collector) to the B bus (3-state) or from the B bus to the A bus depending upon the level at the direction control (DIR) input. The enable input ($\overline{G}$) can be used to disable the device so the buses are isolated.

FUNCTION TABLE

CONTROL INPUTS		OPERATION	
$\overline{G}$	DIR	'LS638	'LS639
L	L	$\overline{B}$ data to A bus	B data to A bus
L	H	$\overline{A}$ data to B bus	A data to B bus
H	X	Isolation	Isolation

H = high level, L = low level, X = irrelevant

DEVICE	A OUTPUT	B OUTPUT	LOGIC
'LS638	Open-Collector	3-State	Inverting
'LS639	Open-Collector	3-State	True

schematics of inputs and outputs

EQUIVALENT OF EACH INPUT

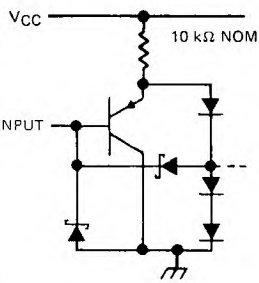

TYPICAL OF A OUTPUTS

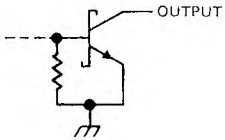

TYPICAL OF B OUTPUTS

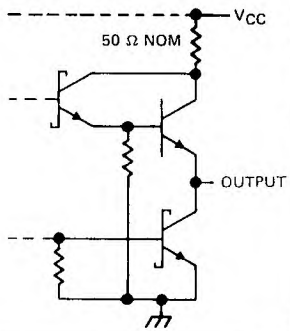

PRODUCTION DATA documents contain information current as of publication date. Products conform to specifications per the terms of Texas Instruments standard warranty. Production processing does not necessarily include testing of all parameters.

logic symbols†

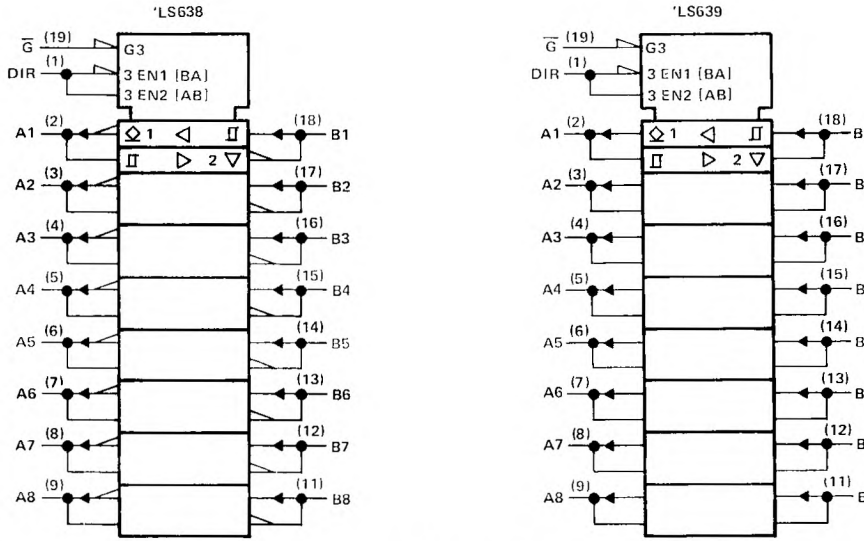

† These symbols are in accordance with ANSI/IEEE Std 91-1984 and IEC Publication 617-12.
Pin numbers shown are for DW, J, and N packages.

logic diagrams (positive logic)

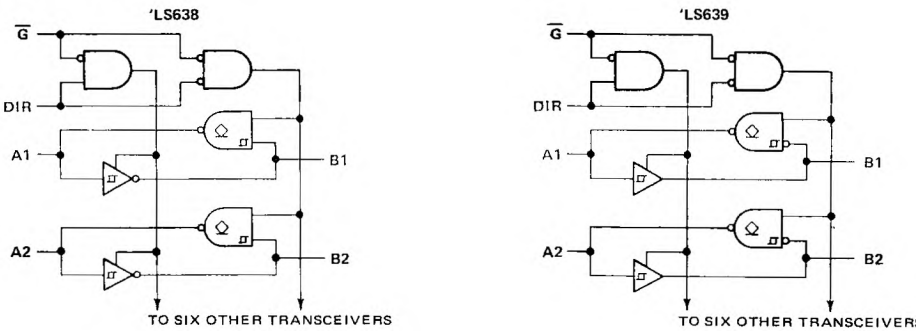

absolute maximum ratings over operating free-air temperature range (unless otherwise noted)

Supply voltage, V_{CC} (see Note 1) . . . . . 7 V
Input voltage (DIR or $\overline{G}$) . . . . . 7 V
Off-state output voltage (A or B) . . . . . 5.5 V
Operating free-air temperature range: SN54LS638, SN54LS639 . . . . . −55°C to 125°C
SN74LS638, SN74LS639 . . . . . 0°C to 70°C
Storage temperature range . . . . . −65°C to 150°C

NOTE 1: Voltage values are with respect to the network ground terminal.

TEXAS INSTRUMENTS
POST OFFICE BOX 655012 • DALLAS, TEXAS 75265

recommended operating conditions

	SN54LS'			SN74LS'			UNIT
	MIN	NOM	MAX	MIN	NOM	MAX	
Supply voltage, V_{CC}	4.5	5	5.5	4.75	5	5.25	V
High-level output voltage, V_{OH} (A bus)			5.5			5.5	V
High-level output current, I_{OH} (B bus)			−12			−15	mA
Low-level output current, I_{OL} (A or B bus)			12			24	mA
Operating free-air temperature, T_A	−55		125	0		70	°C

electrical characteristics over recommended operating free-air temperature range (unless otherwise noted)

PARAMETER			TEST CONDITIONS†		SN54LS'			SN74LS'			UNIT
					MIN	TYP‡	MAX	MIN	TYP‡	MAX	
V_{IH}	High-level input voltage				2			2			V
V_{IL}	Low-level input voltage						0.5			0.6	V
V_{IK}	Input clamp voltage		V_{CC} = MIN, I_I = −18 mA				−1.5			−1.5	V
	Hysteresis ($V_{T+}-V_{T-}$)		V_{CC} = MIN		0.1	0.4		0.2	0.4		V
I_{OH}	High-level output current	A	V_{CC} = MIN, V_{IH} = 2 V, V_{IL} = MAX, V_{OH} = 5.5 V				0.1			0.1	mA
V_{OH}	High-level output voltage	B	V_{CC} = MIN, V_{IH} = 2 V, V_{IL} = MAX	I_{OH} = −3 mA	2.4			2.4			V
				I_{OH} = MAX	2			2			
V_{OL}	Low-level output voltage	A or B	V_{CC} = MIN, V_{IH} = 2 V, V_{IL} = MAX	I_{OL} = 12 mA		0.25	0.4		0.25	0.4	V
				I_{OL} = 24 mA					0.35	0.5	
I_{OZH}	Off-state output current, high-level voltage applied	B	V_{CC} = MAX, $\overline{G}$ at 2 V,	V_O = 2.7 V			20			20	μA
I_{OZL}	Off-state output current low-level voltage applied	A or B	V_{CC} = MAX, $\overline{G}$ at 2 V,	V_O = 0.4 V			−0.4			−0.4	mA
I_I	Input current at maximum input voltage	A or B	V_{CC} = MAX	V_I = 5.5 V			0.1			0.1	mA
		DIR or $\overline{G}$		V_I = 7 V			0.1			0.1	
I_{IH}	High-level input current		V_{CC} = MAX, V_I = 2.7 V				20			20	μA
I_{IL}	Low-level input current		V_{CC} = MAX, V_I = 0.4 V				−0.4			−0.4	mA
I_{OS}	Short-circuit output current§	B	V_{CC} = MAX		−40		−225	−40		−225	mA
I_{CCH}	Supply current, outputs high		V_{CC} = MAX, Outputs open			48	70		48	70	mA
I_{CCL}	Supply current, outputs low		V_{CC} = MAX, Outputs open			62	90		62	90	mA
I_{CCZ}	Supply current, outputs off		V_{CC} = MAX, Outputs open			64	95		64	95	mA

† For conditions shown as MIN or MAX, use the appropriate value specified under recommended operating conditions.
‡ All typical values are at V_{CC} = 5 V, T_A = 25°C.
§ Not more than one output should be shorted at a time, and duration of the short circuit should not exceed one second.

switching characteristics, V_{CC} = 5 V, T_A = 25°C, see note 2

PARAMETER	FROM (INPUT)	TO (OUTPUT)	TEST CONDITIONS	'LS638			'LS639			UNIT
				MIN	TYP	MAX	MIN	TYP	MAX	
t_{PLH}	A	B	C_L = 45 pF, R_L = 667 Ω		6	10		8	15	ns
	B	A			17	25		19	25	
t_{PHL}	A	B			8	15		11	15	ns
	B	A			14	25		16	25	
t_{PLH}	$\overline{G}$	A			26	40		23	40	ns
t_{PHL}	$\overline{G}$	A			43	65		34	50	ns
t_{PZH}	$\overline{G}$	B			23	40		26	40	ns
t_{PZL}	$\overline{G}$	B			31	40		31	40	ns
t_{PHZ}	$\overline{G}$	B	C_L = 5 pF, R_L = 667 Ω		15	25		15	25	ns
t_{PLZ}	$\overline{G}$	B			15	25		15	25	ns

NOTE 2: Load circuits and voltage waveforms are shown in Section 1.

TYPICAL CHARACTERISTICS

SN54LS'
INVERTING OUTPUT VOLTAGE
vs
INPUT VOLTAGE

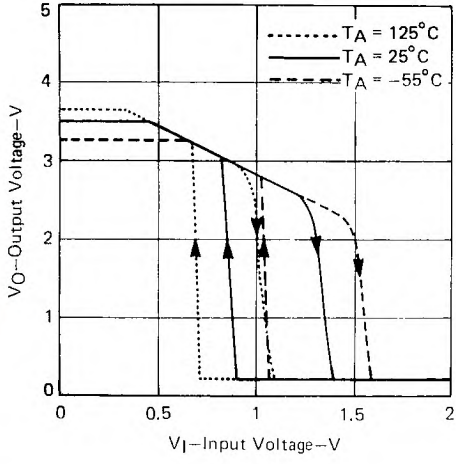

FIGURE 1

SN74LS'
INVERTING OUTPUT VOLTAGE
vs
INPUT VOLTAGE

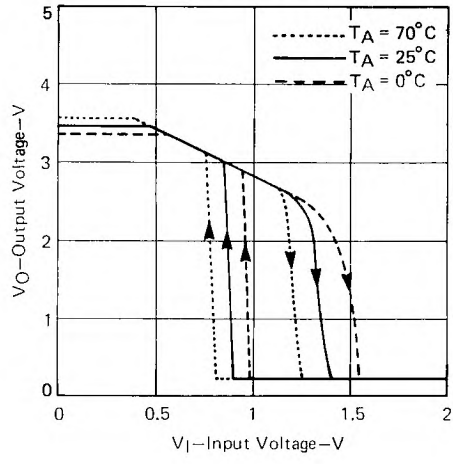

FIGURE 2

SN54LS'
NONINVERTING OUTPUT VOLTAGE
vs
INPUT VOLTAGE

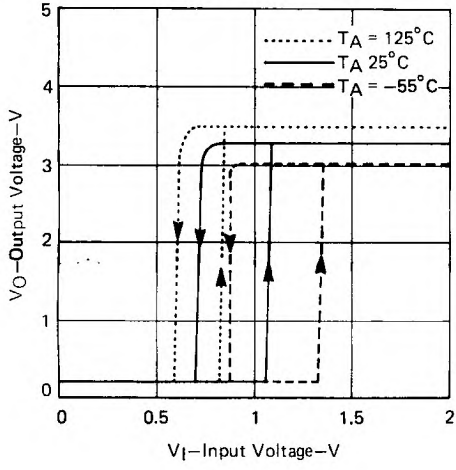

FIGURE 3

SN74LS'
NONINVERTING OUTPUT VOLTAGE
vs
INPUT VOLTAGE

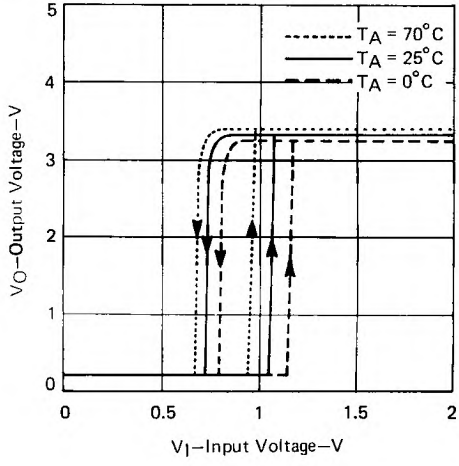

FIGURE 4

TEXAS INSTRUMENTS
POST OFFICE BOX 655012 • DALLAS, TEXAS 75265

- **SN74LS64X-1 Versions Rated at I_{OL} of 48 mA**
- **Bi-directional Bus Transceivers in High-Density 20-Pin Packages**
- **Hysteresis at Bus Inputs Improves Noise Margins**
- **Choice of True or Inverting Logic**
- **Choice of 3-State or Open-Collector Outputs**

DEVICE	OUTPUT	LOGIC
'LS640	3-State	Inverting
'LS641	Open-Collector	True
'LS642	Open-Collector	Inverting
'LS644	Open-Collector	True and inverting
'LS645	3-State	True

SN54LS' . . . J PACKAGE
SN74LS' . . . DW OR N PACKAGE
(TOP VIEW)

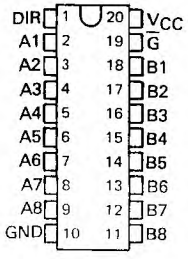

SN54LS' . . . FK PACKAGE
(TOP VIEW)

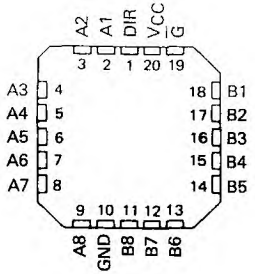

description

These octal bus transceivers are designed for asynchronous two-way communication between data buses. The devices transmit data from the A bus to the B bus or from the B bus to the A bus depending upon the level at the direction control (DIR) input. The enable input ($\overline{G}$) can be used to disable the device so the buses are effectively isolated.

The -1 versions of the SN74LS640 thru SN74LS642, SN74LS644, and SN74LS645 are identical to the standard versions except that the recommended maximum I_{OL} is increased to 48 milliamperes. There are no -1 versions of the SN54LS640 thru SN54LS642, SN54LS644, and SN54LS645.

The SN54LS640 thru SN54LS642, SN54LS644, and SN54LS645 are characterized for operation over the full military temperature range of −55°C to 125°C. The SN74LS640 thru SN74LS642, SN74LS644, and SN74LS645 are characterized for operation from 0°C to 70°C.

FUNCTION TABLE

CONTROL INPUTS		OPERATION		
$\overline{G}$	DIR	'LS640 'LS642	'LS641 'LS645	'LS644
L	L	$\overline{B}$ data to A bus	B data to A bus	B data to A bus
L	H	$\overline{A}$ data to B bus	A data to B bus	$\overline{A}$ data to B bus
H	X	Isolation	Isolation	Isolation

H = high level, L = low level, X = irrelevant

PRODUCTION DATA documents contain information current as of publication date. Products conform to specifications per the terms of Texas Instruments standard warranty. Production processing does not necessarily include testing of all parameters.

logic symbols†

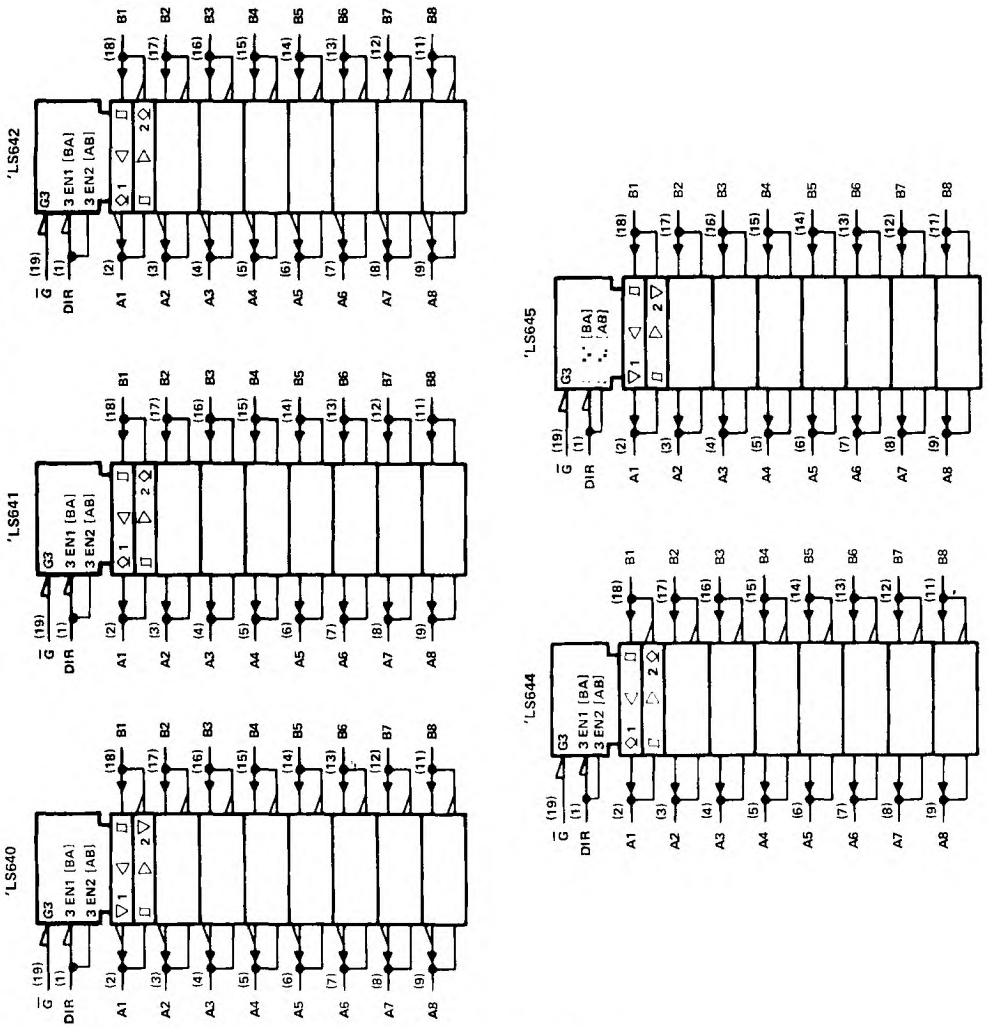

† These symbols are in accordance with ANSI/IEEE Std 91-1984 and IEC Publication 617-12.
Pin numbers shown are for DW, J, and N packages.

TEXAS INSTRUMENTS
POST OFFICE BOX 655012 • DALLAS, TEXAS 75265

logic diagrams (positive logic)

'LS640

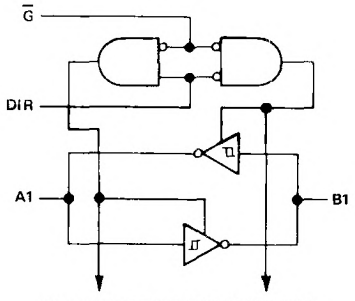

'LS641

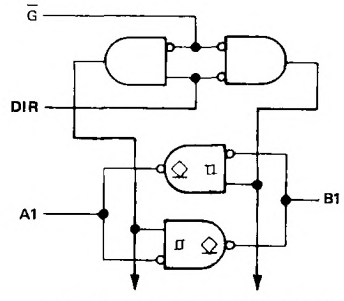

'LS642

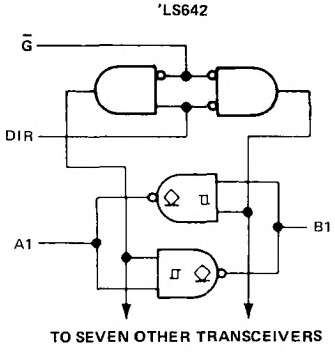

'LS644

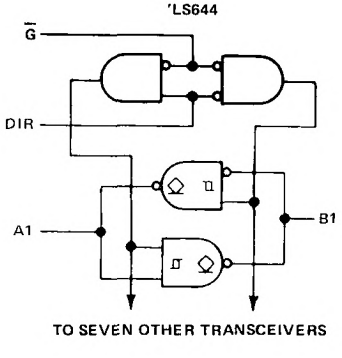

'LS645

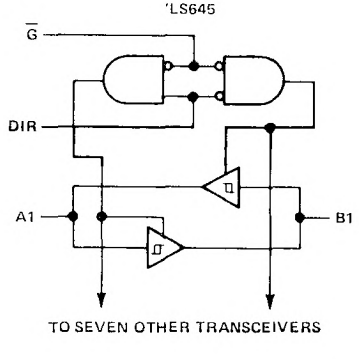

absolute maximum ratings over operating free-air temperature range (unless otherwise noted)

Supply voltage, V_{CC} (see Note 1) . . . . . 7 V
Input voltage: All inputs . . . . . 7 V
I/O ports . . . . . 5.5 V
Operating free-air temperature range: SN54LS640, SN54LS645 . . . . . −55°C to 125°C
SN74LS640, SN74LS645 . . . . . 0°C to 70°C
Storage temperature range . . . . . −65°C to 150°C

NOTE 1: Voltage values are with respect to network ground terminal.

recommended operating conditions

PARAMETER		SN54LS640 SN54LS645			SN74LS640 SN74LS645			UNIT
		MIN	NOM	MAX	MIN	NOM	MAX	
V_{CC}	Supply voltage	4.5	5	5.5	4.75	5	5.25	V
V_{IH}	High-level input voltage	2			2			V
V_{IL}	Low-level input voltage			0.5			0.6	V
I_{OH}	High-level output current			−12			−15	mA
I_{OL}	Low-level output current			12			24	mA
							48†	
T_A	Operating free-air temperature	−55		125	0		70	°C

†The 48-mA limit applies for the SN74LS640-1 and SN74LS645-1 only.

electrical characteristics over recommended operating free-air temperature range (unless otherwise noted)

PARAMETER		TEST CONDITIONS‡		SN54LS640 SN54LS645			SN74LS640 SN74LS645			UNIT
				MIN	TYP§	MAX	MIN	TYP§	MAX	
V_{IK}		V_{CC} = MIN, I_I = −18 mA				−1.5			−1.5	V
Hysteresis ($V_{T+} - V_{T-}$)		V_{CC} = MIN,	A or B input	0.1	0.4		0.2	0.4		V
V_{OH}		V_{CC} = MIN, V_{IH} = 2 V, V_{IL} = MAX	I_{OH} = −3 mA	2.1	3.4		2.4	3.4		V
			I_{OH} = MAX				2			
V_{OL}		V_{CC} = MIN, V_{IH} = 2 V, V_{IL} = MAX	I_{OL} = 12 mA		0.25	0.4		0.25	0.4	V
			I_{OL} = 24 mA					0.35	0.5	
			I_{OL} = 48 mA#					0.4	0.5	
I_{OZH}		V_{CC} = MAX, $\overline{G}$ at 2 V,	V_O = 2.7 V			20			20	μA
I_{OZL}		V_{CC} = MAX, $\overline{G}$ at 2 V,	V_O = 0.4 V			−0.4			−0.4	mA
I_I	A or B	V_{CC} = MAX	V_I = 5.5 V			0.1			0.1	mA
	DIR or $\overline{G}$		V_I = 7 V			0.1			0.1	
I_{IH}		V_{CC} = MAX, V_{IH} = 2.7 V				20			20	μA
I_{IL}		V_{CC} = MAX, V_{IL} = 0.4 V				−0.4			−0.4	mA
I_{OS}¶		V_{CC} = MAX		−40		−225	−40		−225	mA
I_{CC}	Outputs high	V_{CC} = MAX, Outputs open			48	70		48	70	mA
	Outputs low				62	90		62	90	
	Outputs at Hi-Z				64	95		64	95	

†For conditions shown as MIN or MAX, use the appropriate value specified under recommended operating conditions.
§All typical values are at V_{CC} = 5 V, T_A = 25°C.
¶Not more than one output should be shorted at a time, and duration of the short-circuit should not exceed one second.
#The 48-mA condition applies for the SN74LS640-1 and SN74LS645-1 only.

TEXAS INSTRUMENTS
POST OFFICE BOX 655012 • DALLAS, TEXAS 75265

switching characteristics, V_{CC} = 5 V, T_A = 25°C

PARAMETER		FROM (INPUT)	TO (OUTPUT)	TEST CONDITIONS	'LS640, 'LS640-1			'LS645, 'LS645-1			UNIT
					MIN	TYP	MAX	MIN	TYP	MAX	
t_{PLH}	Propagation delay time, low-to-high-level output	A	B	C_L = 45 pF, R_L = 667 Ω, See Note 2		6	10		8	15	ns
		B	A			6	10		8	15	
t_{PHL}	Propagation delay time, high-to-low-level output	A	B			8	15		11	15	ns
		B	A			8	15		11	15	
t_{PZL}	Output enable time to low level	$\overline{G}$	A			31	40		31	40	ns
		$\overline{G}$	B			31	40		31	40	
t_{PZH}	Output enable time to high level	$\overline{G}$	A			23	40		26	40	ns
		$\overline{G}$	B			23	40		26	40	
t_{PLZ}	Output disable time from low level	$\overline{G}$	A	C_L = 5 pF, R_L = 667 Ω, See Note 2		15	25		15	25	ns
		$\overline{G}$	B			15	25		15	25	
t_{PHZ}	Output disable time from high level	$\overline{G}$	A			15	25		15	25	ns
		$\overline{G}$	B			15	25		15	25	

NOTE 2: Load circuits and voltage waveforms are shown in Section 1.

schematics of inputs and outputs

EQUIVALENT OF EACH INPUT

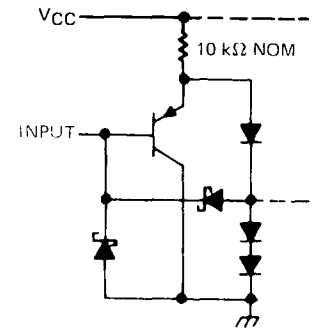

TYPICAL OF OUTPUTS

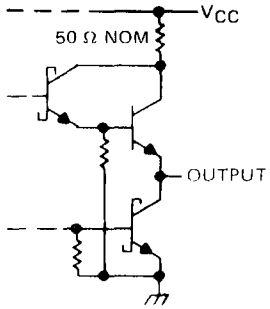

TYPICAL CHARACTERISTICS

SN54LS'
INVERTING OUTPUT VOLTAGE
vs
INPUT VOLTAGE

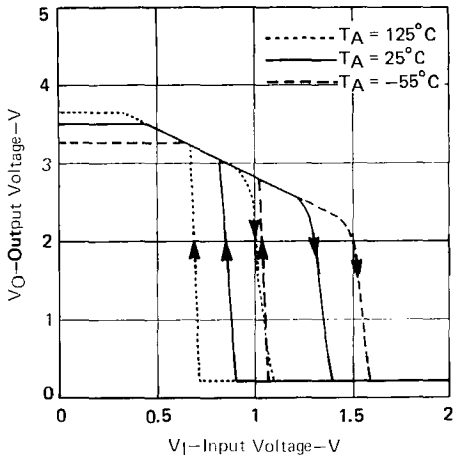

FIGURE 1

SN74LS'
INVERTING OUTPUT VOLTAGE
vs
INPUT VOLTAGE

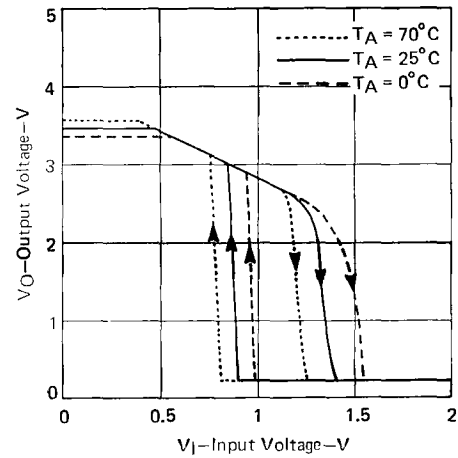

FIGURE 2

SN54LS'
NONINVERTING OUTPUT VOLTAGE
vs
INPUT VOLTAGE

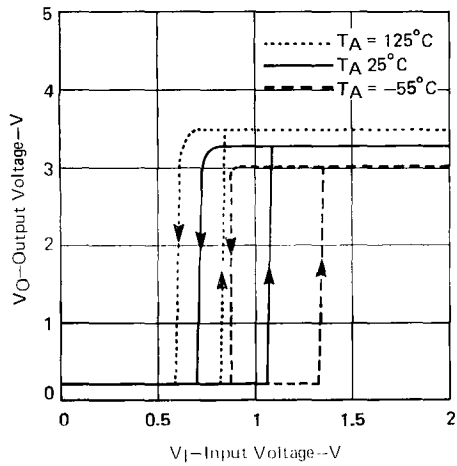

FIGURE 3

SN74LS'
NONINVERTING OUTPUT VOLTAGE
vs
INPUT VOLTAGE

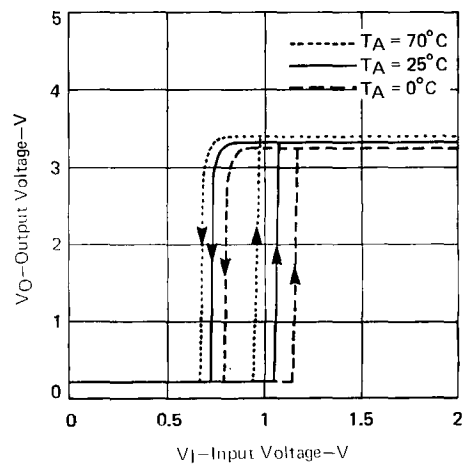

FIGURE 4

TEXAS INSTRUMENTS
POST OFFICE BOX 655012 • DALLAS, TEXAS 75265

absolute maximum ratings over operating free-air temperature range (unless otherwise noted)

Supply voltage, V_{CC} (see Note 1) . . . . . 7 V
Input voltage: All inputs and I/O ports . . . . . 7 V
Operating free-air temperature range: SN54LS641, SN54LS642, SN54LS644 . . . . . −55°C to 125°C
SN74LS641, SN74LS642, SN74LS644 . . . . . 0°C to 70°C
Storage temperature range . . . . . −65°C to 150°C

NOTE 1: Voltage values are with respect to network ground terminal.

recommended operating conditions

PARAMETER		SN54LS641 SN54LS642 SN54LS644			SN74LS641 SN74LS642 SN74LS644			UNIT
		MIN	NOM	MAX	MIN	NOM	MAX	
V_{CC}	Supply voltage	4.5	5	5.5	4.75	5	5.25	V
V_{IH}	High-level input voltage	2			2			V
V_{IL}	Low-level input voltage			0.5			0.8	V
V_{OH}	High-level output voltage			5.5			5.5	V
I_{OL}	Low-level output current			12			24	mA
							48§	
T_A	Operating free-air temperature	−55		125	0		70	°C

§The 48 mA limit applies for the SN74LS641-1, SN74LS642-1, and SN74LS644-1 only.

electrical characteristics over recommended operating free-air temperature range (unless otherwise noted)

PARAMETER		TEST CONDITIONS†		SN54LS641 SN54LS642 SN54LS644			SN74LS641 SN74LS642 SN74LS644			UNIT
				MIN	TYP‡	MAX	MIN	TYP‡	MAX	
V_{IK}		V_{CC} = MIN,	I_I = −18 mA			−1.5			−1.5	V
Hysteresis ($V_{T+} - V_{T-}$)		V_{CC} = MIN,	A or B input	0.1	0.4		0.2	0.4		V
I_{OH}		V_{CC} = MIN, V_{IL} = MAX,	V_{IH} = 2 V, V_{OH} = 5.5 V			0.1			0.1	mA
V_{OL}		V_{CC} = MIN, V_{IH} = 2 V, V_{IL} = MAX	I_{OL} = 12 mA		0.25	0.4		0.25	0.4	V
			I_{OL} = 24 mA					0.35	0.5	
			I_{OL} = 48 mA§					0.4	0.5	
I_I	A or B	V_{CC} = MAX	V_I = 5.5 V			0.1			0.1	mA
	DIR or $\overline{G}$		V_I = 7 V			0.1			0.1	
I_{IH}		V_{CC} = MAX,	V_I = 2.7 V			20			20	μA
I_{IL}		V_{CC} = MAX,	V_I = 0.4 V			−0.4			−0.4	mA
I_{CC}	Outputs high	V_{CC} = MAX,	Outputs open		48	70		48	70	mA
	Outputs low				62	90		62	90	
	Outputs at Hi-Z				64	95		64	95	

† For conditions shown as MIN or MAX, use the appropriate value specified under recommended operating conditions.
‡ All typical values are at V_{CC} = 5 V, T_A = 25°C.
§The 48 mA condition applies for the SN74LS641-1, SN74LS642-1, and SN74LS644-1 only.

switching characteristics at V_{CC} = 5 V, T_A = 25°C

PARAMETER		FROM (INPUT)	TO (OUTPUT)	TEST CONDITIONS	'LS641, 'LS641-1			'LS642, 'LS642-1			'LS644, 'LS644-1			UNIT
					MIN	TYP	MAX	MIN	TYP	MAX	MIN	TYP	MAX	
t_{PLH}	Propagation delay time, low-to-high-level output	A	B	C_L = 45 pF, R_L = 667 Ω, See Note 2		17	25		19	25		17	25	ns
		B	A			17	25		19	25		19	25	
t_{PHL}	Propagation delay time, high-to-low-level output	A	B			16	25		14	25		14	25	ns
		B	A			16	25		14	25		16	25	
t_{PLH}	Output disable time from low level	$\overline{G}$, DIR	A			23	40		26	40		26	40	ns
		$\overline{G}$, DIR	B			25	40		28	40		25	40	
t_{PHL}	Output enable time from high level	$\overline{G}$, DIR	A			34	50		43	60		43	60	ns
		$\overline{G}$, DIR	B			37	50		39	60		37	50	

NOTE 2 Load circuits and voltage waveforms are shown in Section 1.

schematics of inputs and outputs

EQUIVALENT OF EACH INPUT

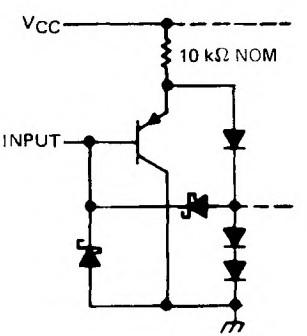

TYPICAL OF OUTPUTS

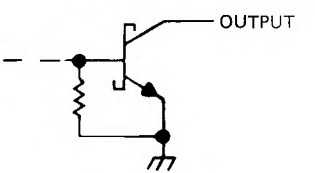

TEXAS INSTRUMENTS
POST OFFICE BOX 655012 • DALLAS, TEXAS 75265

D2661, · ·· 1982 — ·· . ··

- **Independent Registers for A and B Buses**
- **Multiplexed Real-Time and Stored Data**
- **Choice of True or Inverting Data Paths**
- **Choice of 3-State or Open-Collector Outputs**
- **Included Among the Package Options Are Compact 24-pin 300-mil-Wide Plastic and Ceramic DIPs, Ceramic Chip Carriers, and Plastic "Small Outline" Packages**
- **Dependable Texas Instruments Quality and Reliability**

DEVICE	OUTPUT	LOGIC
'LS646	3-State	True
'LS647	Open-Collector	True
'LS648	3-State	Inverting
'LS649	Open-Collector	Inverting

SN54LS' . . . JT PACKAGE
SN74LS' . . . DW OR NT PACKAGE
(TOP VIEW)

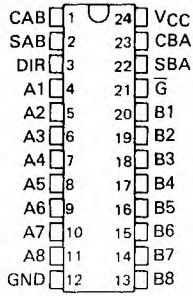

SN54LS' . . . FK PACKAGE
(TOP VIEW)

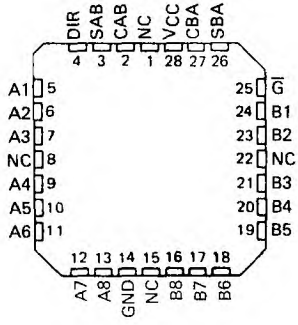

description

These devices consist of bus transceiver circuits with 3-state or open-collector outputs, D-type flip-flops, and control circuitry arranged for multiplexed transmission of data directly from the input bus or from the internal registers. Data on the A or B bus will be clocked into the registers on the low-to-high transition of the appropriate clock pin (CAB or CBA). The following examples demonstrate the four fundamental bus-management functions that can be performed with the octal bus transceivers and registers.

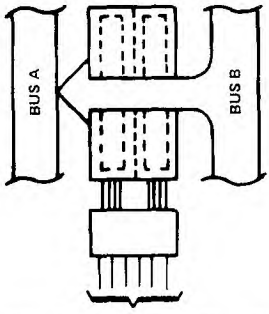

(21)	(3)	(1)	(23)	(2)	(22)
$\overline{G}$	DIR	CAB	CBA	SAB	SBA
L	L	X	H or L	X	L

REAL-TIME TRANSFER
BUS B TO BUS A

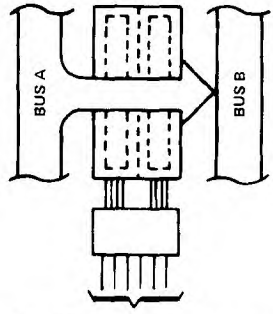

(21)	(3)	(1)	(23)	(2)	(22)
$\overline{G}$	DIR	CAB	CBA	SAB	SBA
L	H	H or L	X	L	X

REAL-TIME TRANSFER
BUS A TO BUS B

··· documents contain information current as of publication date. Products conform to specifications per the terms of Texas Instruments standard warranty. Production processing does not necessarily include testing of all parameters.

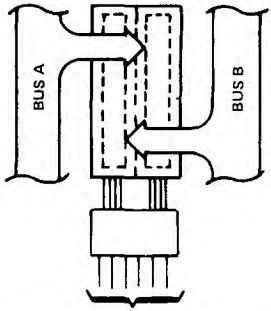

(21)	(3)	(1)	(23)	(2)	(22)
$\overline{G}$	DIR	CAB	CBA	SAB	SBA
X	X	↑	X	X	X
X	X	X	↑	X	X
H	X	↑	↑	X	X

STORAGE FROM
A, B, OR A AND B

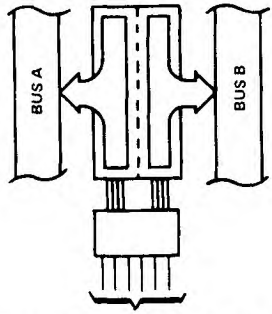

(21)	(3)	(1)	(23)	(2)	(22)
$\overline{G}$	DIR	CAB	CBA	SAB	SBA
L	L	X	X	X	H
L	H	X	X	H	X

TRANSFER
STORED DATA
TO A OR B

Enable ($\overline{G}$) and direction (DIR) pins are provided to control the transceiver functions. In the transceiver mode, data present at the high-impedance port may be stored in either register or in both. The select controls (SAB and SBA) can multiplex stored and real-time (transparent mode) data. The direction control determines which bus will receive data when enable $\overline{G}$ is active (low). In the isolation mode (control $\overline{G}$ high), A data may be stored in one register and/or B data may be stored in the other register.

When an output function is disabled, the input function is still enabled and may be used to store and transmit data. Only one of the two buses, A or B, may be driven at a time.

The SN54' family is characterized for operation over the full military temperature range of −55°C to 125°C. The SN74' family is characterized for operation from 0° to 70°C.

FUNCTION TABLE

INPUTS						DATA I/O†		OPERATION OR FUNCTION	
$\overline{G}$	DIR	CAB	CBA	SAB	SBA	A1 THRU A8	B1 THRU B8	LS646, LS647	LS648, LS649
X	X	↑	X	X	X	Input	Not specified	Store A, B unspecified	Store A, B unspecified
X	X	X	↑	X	X	Not specified	Input	Store B, A unspecified	Store B, A unspecified
H	X	↑	↑	X	X	Input	Input	Store A and B Data	Store A and B Data
H	X	H or L	H or L	X	X			Isolation, hold storage	Isolation, hold storage
L	L	X	H or L	X	L	Output	Input	Real-Time B Data to A Bus	Real-Time $\overline{B}$ Data to A Bus
L	L	X	X	X	H			Stored B Data to A Bus	Stored $\overline{B}$ Data to A Bus
L	H	H or L	X	L	X	Input	Output	Real-Time A Data to B Bus	Real-Time $\overline{A}$ Data to B Bus
L	H	X	X	H	X			Stored A Data to B Bus	Stored $\overline{A}$ Data to B Bus

† The data output functions may be enabled or disabled by various signals at the $\overline{G}$ and DIR inputs. Data input functions are always enabled, i.e., data at the bus pins will be stored on every low-to-high transition on the clock inputs.

TEXAS INSTRUMENTS
POST OFFICE BOX 655012 • DALLAS, TEXAS 75265

logic diagrams (positive logic)

'LS646, 'LS647

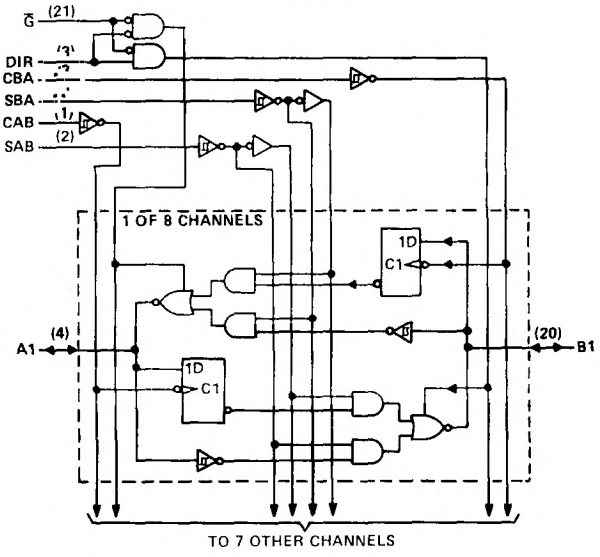

'LS648, 'LS649

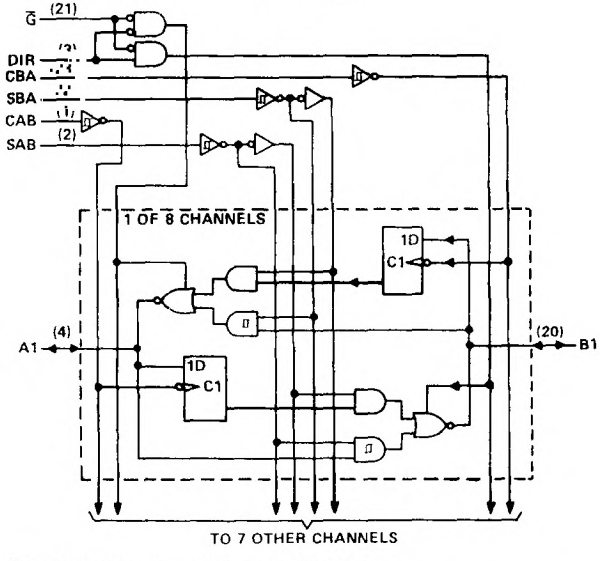

Pin numbers shown are for DW, JT, and NT packages.

logic symbols†

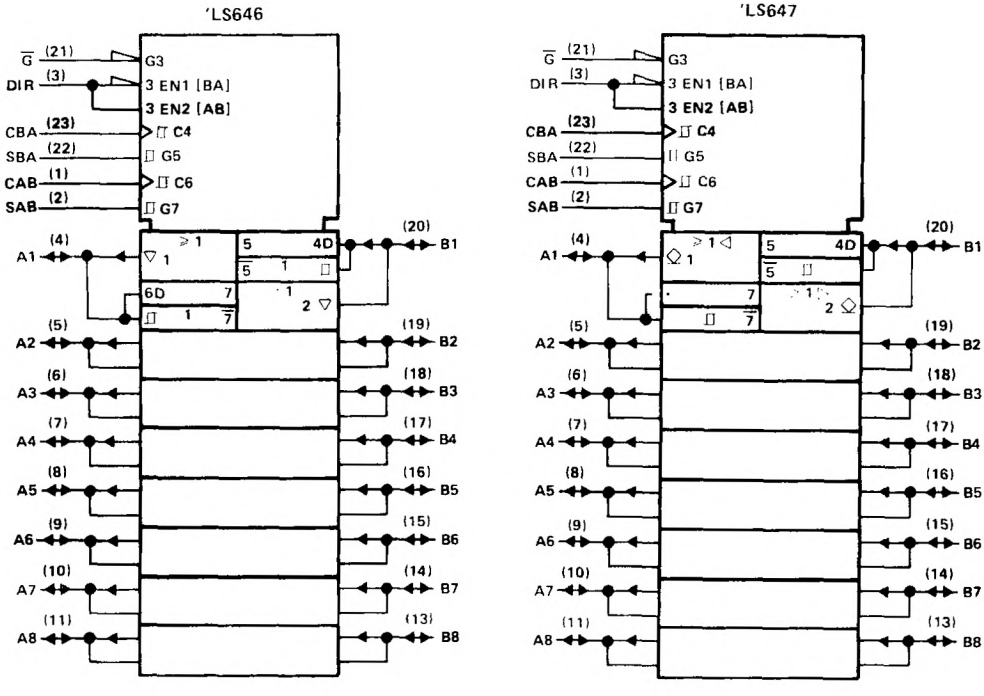

†These symbols are in accordance with ANSI/IEEE Std. 91-1984 and IEC Publication 617-12.
Pin numbers shown are for DW, JT, and NT packages.

TEXAS INSTRUMENTS
POST OFFICE BOX 655012 • DALLAS, TEXAS 75265

logic symbols† (continued)

'LS648

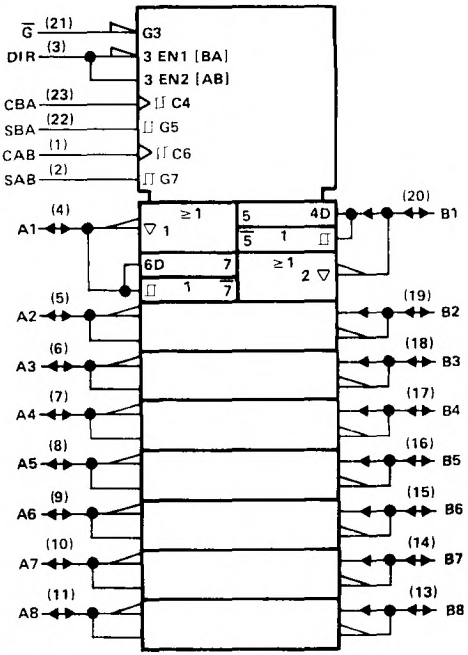

'LS649

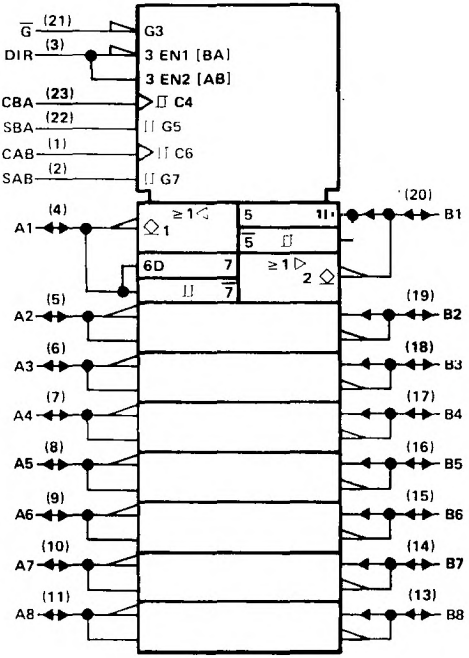

†These symbols are in accordance with ANSI/IEEE Std. 91-1984 and IEC Publication 617-12.
Pin numbers shown are for DW, JT, and NT packages.

schematics of inputs and outputs

EQUIVALENT OF DIRECTION INPUTS

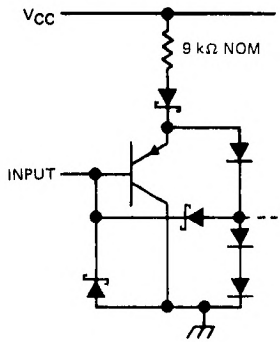

EQUIVALENT OF ALL OTHER INPUTS

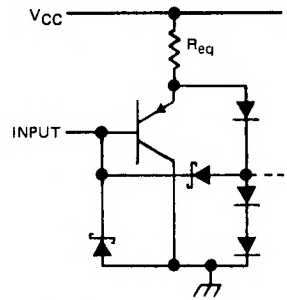

A and B: R_{eq} = 15 kΩ NOM
$\overline{G}$, CAB and CBA: R_{eq} = 10 kΩ NOM
SAB and SBA: R_{eq} = 6 kΩ NOM

TYPICAL OF ALL 'LS646, 'LS648 OUTPUTS

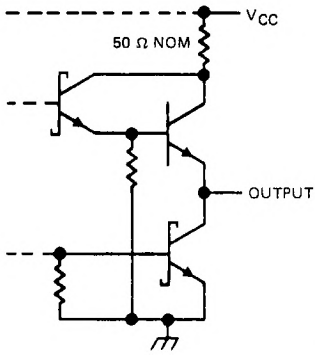

TYPICAL OF ALL 'LS647, 'LS649 OUTPUTS

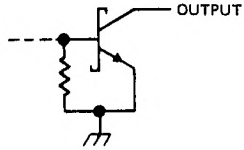

TEXAS INSTRUMENTS
POST OFFICE BOX 655012 • DALLAS, TEXAS 75265

absolute maximum ratings over operating free-air temperature range (unless otherwise noted)

Supply voltage, V_{CC} . . . . . 7 V
Input voltage: Control inputs . . . . . 7 V
I/O ports . . . . . 5.5 V
Operating free-air temperature range: SN54LS646, SN54LS648 . . . . . −55°C to 125°C
SN74LS646, SN74LS648 . . . . . 0°C to 70°C
Storage temperature range . . . . . −65°C to 150°C

recommended operating conditions

			SN54LS646/648			SN74LS646/648			UNIT
			MIN	NOM	MAX	MIN	NOM	MAX	
V_{CC}	Supply voltage		4.5	5	5.5	4.75	5	5.25	V
V_{IH}	High-level input voltage		2			2			V
V_{IL}	Low-level input voltage				0.5			0.6	V
I_{OH}	High-level output current				−12			−15	mA
I_{OL}	Low-level output current				12			24	mA
t_w	Pulse duration	CBA or CAB high	15			15			ns
		CBA or CAB low	30			30			
		Data high or low	30			30			
t_{su}	Setup time before CABꜛ or CBAꜛ	A or B	15			15			ns
t_h	Hold time after CABꜛ or CBAꜛ	A or B	0			0			ns
T_A	Operating free-air temperature		−55		125	0		70	°C

electrical characteristics over recommended operating free-air temperature range (unless otherwise noted)

PARAMETER		TEST CONDITIONS†		SN54LS646/648			SN74LS646/648			UNIT
				MIN	TYP‡	MAX	MIN	TYP‡	MAX	
V_{IK}		V_{CC} = MIN, I_I = −18 mA				−1.5			−1.5	V
Hysteresis ($V_{T+}-V_{T-}$)	A or B input	V_{CC} = MIN		0.1	0.4		0.2	0.4		V
V_{OH}		V_{CC} = MIN, V_{IH} = 2 V, V_{IL} = MAX	I_{OH} = −3 mA	2.4	3.4		2.4	3.4		V
			I_{OH} = −12 mA	2						
			I_{OH} = −15 mA				2			
V_{OL}		V_{CC} = MIN, V_{IH} = 2 V, V_{IL} = MAX	I_{OL} = 12 mA		0.25	0.4		0.25	0.4	V
			I_{OL} = 24 mA					0.35	0.5	
I_I	Control inputs	V_{CC} = MAX, V_I = 7 V				0.1			0.1	mA
	A or B ports	V_{CC} = MAX, V_I = 5.5 V				0.1			0.1	
I_{IH}	Control inputs	V_{CC} = MAX, V_I = 2.7 V				20			20	μA
	A or B ports¶					20			20	
I_{IL}	Control inputs	V_{CC} = MAX, V_I = 0.4 V				−0.4			−0.4	mA
	A or B ports¶					−0.4			−0.4	
I_{OS}§		V_{CC} = MAX, V_O = 0 V		−40		−225	−40		−225	mA
I_{CC}	LS646	V_{CC} = MAX	Outputs high		91	145		91	145	mA
			Outputs low		103	165		103	165	
			Outputs disabled		103	165		103	165	
	LS648		Outputs high		91	145		91	145	
			Outputs low		103	165		103	165	
			Outputs disabled		120	180		120	180	

† For conditions shown as MIN or MAX, use the appropriate value specified under recommended operating conditions.
‡ All typical values are at V_{CC} = 5 V, T_A = 25°C.
§ Not more than one output should be shorted at a time, and duration of the short-circuit should not exceed one second.
¶ For I/O ports, the parameters I_{IH} and I_{IL} include the off-state output current.

switching characteristics, V_{CC} = 5 V, T_A = 25°C

PARAMETER	FROM (INPUT)	TO (OUTPUT)	TEST CONDITIONS	'LS646			'LS648			UNIT
				MIN	TYP	MAX	MIN	TYP	MAX	
t_{PLH}	CAB or CBA	A or B	R_L = 667 Ω, C_L = 45 pF, See Note 2		15	25		15	25	ns
t_{PHL}					23	35		24	40	ns
t_{PLH}	A or B	B or A			12	18		12	18	ns
t_{PHL}					13	20		15	25	ns
t_{PLH}	SAB or SBA† with Bus Input high	A or B			26	40		37	55	ns
t_{PHL}					21	35		24	40	ns
t_{PLH}	SAB or SBA† with Bus Input low				33	50		26	40	ns
t_{PHL}					14	25		23	40	ns
t_{PZH}	$\overline{G}$	A or B			33	55		30	50	ns
t_{PZL}					42	65		37	55	ns
t_{PZH}	DIR				28	45		23	40	ns
t_{PZL}					39	60		30	45	ns
t_{PHZ}	$\overline{G}$	A or B	R_L = 667 Ω, C_L = 5 pF, See Note 2		23	35		28	45	ns
t_{PLZ}					22	35		22	35	ns
t_{PHZ}	DIR				20	30		24	35	ns
t_{PLZ}					19	30		19	30	ns

† These parameters are measured with the internal output state of the storage register opposite to that of the input.
NOTE 2: Load circuits and voltage waveforms are shown in Section 1.

TEXAS INSTRUMENTS
POST OFFICE BOX 655012 • DALLAS, TEXAS 75265

absolute maximum ratings over operating free-air temperature range (unless otherwise noted)

Supply voltage, V_{CC} (see Note 1) . . . . . 7 V
Input voltage (control inputs) . . . . . 7 V
Off-state output voltage (A and B ports) . . . . . 5.5 V
Operating free-air temperature range: SN54LS647, SN54LS649 . . . . . −55°C to 125°C
SN74LS647, SN74LS649 . . . . . 0°C to 70°C
Storage temperature range . . . . . −65°C to 150°C

recommended operating conditions

			SN54LS647 SN54LS649			SN74LS647 SN74LS649			UNIT
			MIN	NOM	MAX	MIN	NOM	MAX	
V_{CC}	Supply voltage		4.5	5	5.5	4.75	5	5.25	V
V_{IH}	High-level input voltage		2			2			V
V_{IL}	Low-level input voltage				0.5			0.6	V
V_{OH}	High-level output voltage				5.5			5.5	V
I_{OL}	Low-level output voltage				12			24	mA
t_w	Pulse duration	CBA or CAB high	15			15			ns
		CBA or CAB low	30			30			
		Data high or low	30			30			
t_{su}	Setup time before CAB↑ or CBA↑	A or B	15			15			ns
t_h	Hold time after CAB↑ or CBA↑	A or B	0			0			ns
T_A	Operating free-air temperature		−55		125	0		70	°C

electrical characteristics over recommended operating free-air temperature range (unless otherwise noted)

PARAMETER		TEST CONDITIONS†		SN54LS647 SN54LS649			SN74LS647 SN74LS649			UNIT
				MIN	TYP‡	MAX	MIN	TYP‡	MAX	
V_{IK}		V_{CC} = MIN, I_I = −18 mA				−1.5			−1.5	V
Hysteresis ($V_{T+}-V_{T-}$)	A or B input	V_{CC} = MIN		0.1	0.4		0.2	0.4		V
I_{OH}		V_{CC} = MIN, V_{IH} = 2 V, V_{IL} = MAX, V_{OH} = 5.5 V				0.1			0.1	mA
V_{OL}		V_{CC} = MIN, V_{IH} = 2 V, V_{IL} = MAX	I_{OL} = 12 mA		0.25	0.4		0.25	0.4	V
			I_{OL} = 24 mA					0.35	0.5	
I_I	A or B	V_{CC} = MAX	V_I = 5.5 V			0.1			0.1	mA
	All others		V_I = 7 V			0.1			0.1	
I_{IH}		V_{CC} = MAX, V_I = 2.7 V				20			20	μA
I_{IL}		V_{CC} = MAX, V_I = 0.4 V				−0.4			−0.4	mA
I_{CC}	'LS647	V_{CC} = MAX, Outputs open	Outputs high		79	130		79	130	mA
			Outputs low		94	150		94	150	
	'LS649	V_{CC} = MAX, Outputs open	Outputs high		79	130		79	130	
			Outputs low		94	150		94	150	

† For conditions shown as MIN or MAX, use the appropriate value specified under recommended operating conditions.
‡ All typical values are at V_{CC} = 5 V, T_A = 25°C.

switching characteristics, V_{CC} = 5 V, T_A = 25°C

PARAMETER	FROM (INPUT)	TO (OUTPUT)	TEST CONDITIONS	'LS647			'LS649			UNIT
				MIN	TYP	MAX	MIN	TYP	MAX	
t_{PLH}	CAB or CBA	A or B	R_L = 667 Ω, C_L = 45 pF, See Note 2		22	35		17	30	ns
t_{PHL}					28	45		28	45	ns
t_{PLH}	A or B	B or A			17	26		15	25	ns
t_{PHL}					18	27		20	30	ns
t_{PLH}	SAB or SBA† with Bus Input high	A or B			33	50		37	55	ns
t_{PHL}					29	45		28	45	ns
t_{PLH}	SAB or SBA† with Bus Input low				39	60		30	45	ns
t_{PHL}					19	30		26	40	ns
t_{PLH}	G	A or B			25	40		21	40	ns
t_{PHL}					33	50		34	50	ns
t_{PLH}	DIR				23	35		19	30	ns
t_{PHL}					25	40		27	45	ns

† These parameters are measured with the internal outputs state of the storage register opposite to that of the bus input.
NOTE 2: Load circuits and voltage waveforms are shown in Section 1.

TEXAS INSTRUMENTS
POST OFFICE BOX 655012 • DALLAS, TEXAS 75265

- **Bus Transceivers/Registers**
- **Independent Registers and Enables for A and B Buses**
- **Multiplexed Real-Time and Stored Data**
- **Choice of True and Inverting Data Paths**
- **Choice of 3-State or Open-Collector Outputs to A Bus**
- **Dependable Texas Instruments Quality and Reliability**

DEVICE	A OUTPUT	B OUTPUT	LOGIC
'LS651	3-State	3-State	Inverting
'LS652	3-State	3-State	True
'LS653	Open-collector	3-State	Inverting

SN54LS'. . . JT PACKAGE
SN74LS'. . . DW OR NT PACKAGE
(TOP VIEW)

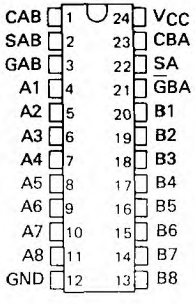

SN54LS'. . . FK PACKAGE
(TOP VIEW)

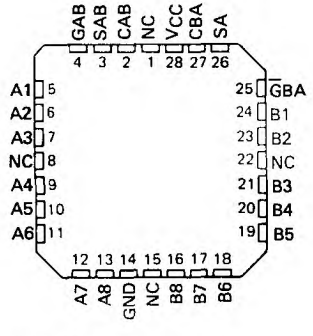

NC — No internal connection

description

These devices consist of bus transceiver circuits, D-type flip-flops, and control circuitry arranged for multiplexed transmission of data directly from the data bus or from the internal storage registers. Enable GAB and $\overline{\text{G}}$BA are provided to control the transceiver functions. SAB and SBA control pins are provided to select whether realtime or stored data is transferred. A low input level selects real-time data, and a high selects stored data. The following examples demonstrate the four fundamental bus-management functions that can be performed with the 'LS651, 'LS652, and 'LS653.

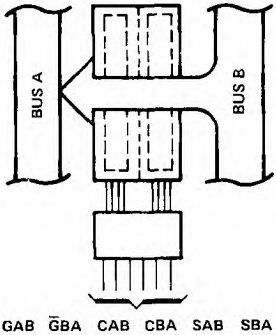

GAB	$\overline{\text{G}}$BA	CAB	CBA	SAB	SBA
L	L	X	X	X	L

REAL-TIME TRANSFER
BUS B TO BUS A

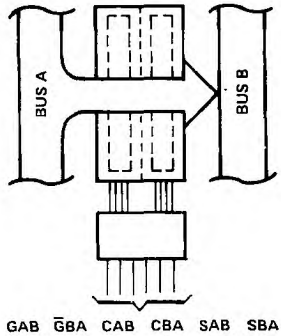

GAB	$\overline{\text{G}}$BA	CAB	CBA	SAB	SBA
H	H	X	X	L	X

REAL-TIME TRANSFER
BUS A TO BUS B

PRODUCTION DATA documents contain information current as of publication date. Products conform to specifications per the terms of Texas Instruments standard warranty. Production processing does not necessarily include testing of all parameters.

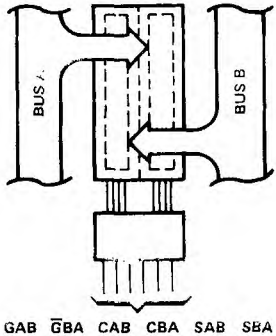

GAB	$\overline{G}$BA	CAB	CBA	SAB	SBA
X	H	↑	X	X	X
L	X	X	↑	↑	X
L	H	↑	↑	X	X

STORAGE FROM
A AND/OR B

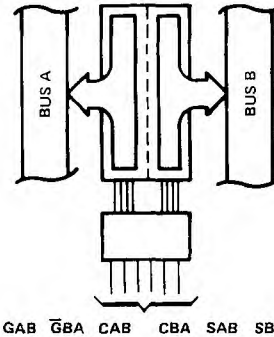

GAB	$\overline{G}$BA	CAB	CBA	SAB	SBA
H	L	H or L	H or L	H	H

TRANSFER
STORED DATA
TO A AND/OR B

Data on the A or B data bus, or both, can be stored in the internal D flip-flop by low-to-high transitions at the appropriate clock pins (CAB or CBA) regardless of the select or enable control pins. When SAB or SBA are in the real-time transfer mode, it is also possible to store data without using the internal D-type flip-flops by simultaneously enabling GAB and $\overline{G}$BA. In this configuration each output reinforces its input. Thus, when all other data sources to the two sets of bus lines are at high impedance, each set of bus lines will remain at its last state.

The SN54LS651 through SN54LS653 are characterized for operation over the full military temperature range of −55°C to 125°C. The SN74LS651 through SN74LS653 are characterized for operation from 0°C to 70°C.

FUNCTION TABLE

INPUTS						DATA I/O*		OPERATION OR FUNCTION	
GAB	$\overline{G}$BA	CAB	CBA	SAB	SBA	A1 THRU A8	B1 THRU B8	'LS651, 'LS653	LS652, LS654
L	H	H or L	H or L	X	X	Input	Input	Isolation	Isolation
L	H	↑	↑	X	X			Store A and B Data	Store A and B Data
X	H	↑	H or L	X	X	Input	Not specified	Store A, Hold B	Store A, Hold B
H	H	↑	↑	X	X	Input	Output	Store A in both registers	Store A in both registers
L	X	H or L	↑	X	X	Not specified	Input	Hold A, Store B	Hold A, Store B
L	L	↑	↑	X	X	Output	Input	Store B in both registers	Store B in both registers
L	L	X	X	X	L	Output	Input	Real-Time $\overline{B}$ Data to A Bus	Real-Time B Data to A Bus
L	L	X	H or L	X	H			Stored $\overline{B}$ Data to A Bus	Stored B Data to A Bus
H	H	X	X	L	X	Input	Output	Real-Time $\overline{A}$ Data to B Bus	Real-Time A Data to B Bus
H	H	H or L	X	H	X			Stored $\overline{A}$ Data to B Bus	Stored A Data to B Bus
H	L	H or L	H or L	H	H	Output	Output	Stored $\overline{A}$ Data to B Bus and Stored $\overline{B}$ Data to A Bus	Stored A Data to B Bus and Stored B Data to A Bus

* The data output functions may be enabled or disabled by various signals at the GAB and $\overline{G}$BA inputs. Data input functions are always enabled, i.e., data at the bus pins will be stored on every low-to-high transition on the clock inputs.

TEXAS INSTRUMENTS
POST OFFICE BOX 655012 • DALLAS, TEXAS 75265

logic diagrams (positive logic)

'LS651, 'LS653

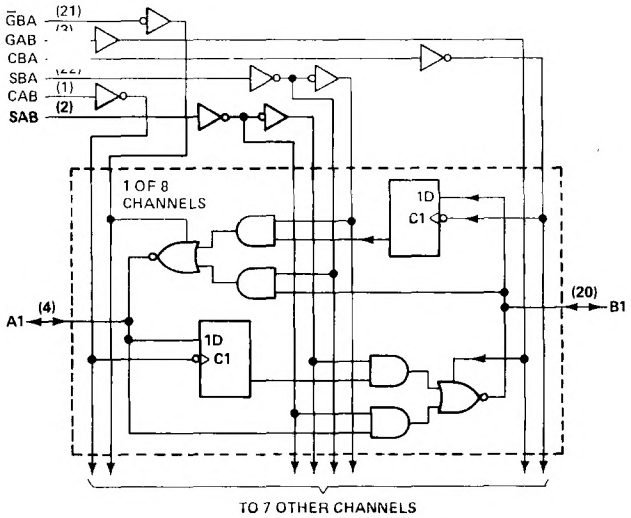

'LS652

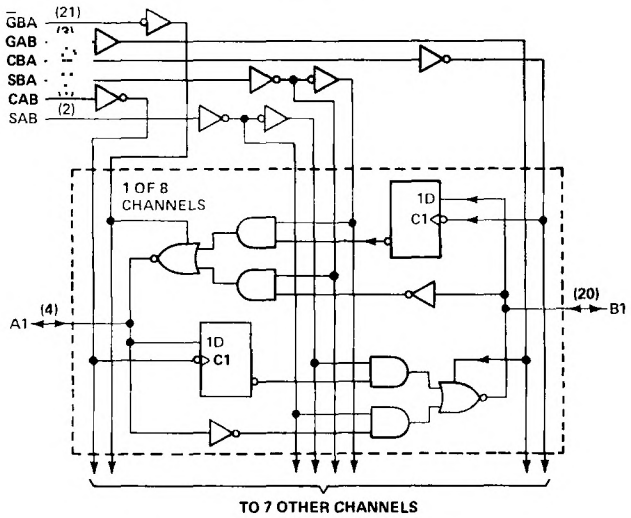

Pin numbers shown are for DW, JT or NT packages.

logic symbols†

'LS651

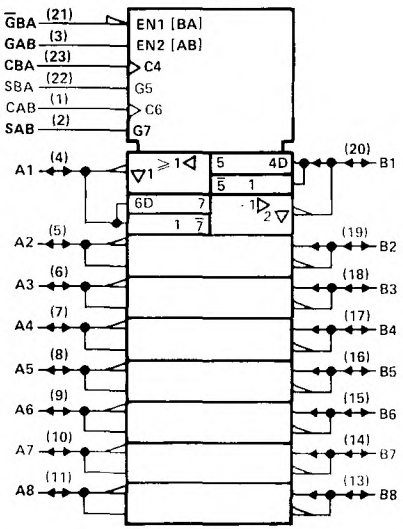

'LS652

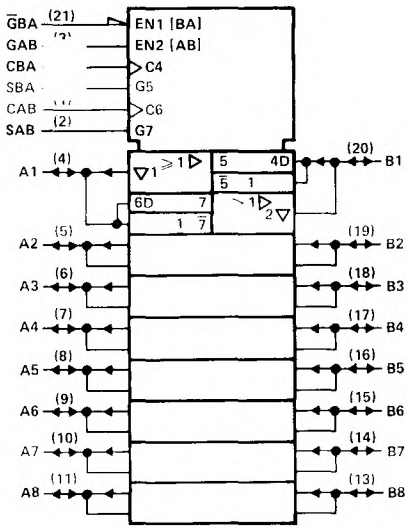

'LS653

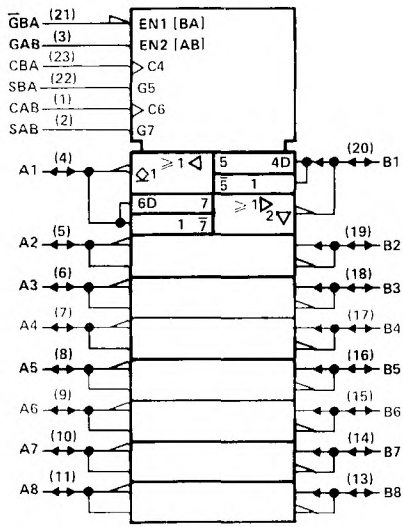

†This symbol is in accordance with ANSI/IEEE Std. 91-1984 and IEC Publication 617-12.
Pin numbers shown are for DW, JT, or NT packages.

TEXAS INSTRUMENTS
POST OFFICE BOX 655012 • DALLAS, TEXAS 75265

absolute maximum ratings over operating free-air temperature range (unless otherwise noted)

Supply voltage, V_{CC} . . . . . 7 V
Input voltage: Control inputs . . . . . 7 V
I/O ports . . . . . 5.5 V
Operating free-air temperature range: SN54LS651, SN54LS652 . . . . . −55°C to 125°C
SN74LS651, SN74LS652 . . . . . 0°C to 70°C
Storage temperature range . . . . . **−65°C to 150°C**

recommended operating conditions

			SN54LS651 SN54LS652			SN74LS651 SN74LS652			UNIT
			MIN	NOM	MAX	MIN	NOM	MAX	
V_{CC}	Supply voltage		4.5	5	5.5	4.75	5	5.25	V
V_{IH}	High-level input voltage		2			2			V
V_{IL}	Low-level input voltage				0.7			0.8	V
I_{OH}	High-level output current				−12			−15	mA
I_{OL}	Low-level output current				12			24	mA
t_w	Pulse duration	CBA or CAB high	15			15			ns
		CBA or CAB low	15			15			
		Data high or low	15			15			
t_{su}	Setup time before CAB↑ or CBA↑	A or B	15			15			ns
t_h	Hold time after CAB↑ or CBA↑	A or B	0			0			ns
T_A	Operating free-air temperature		−55		125	0		70	°C

electrical characteristics over recommended operating free-air temperature range (unless otherwise noted)

PARAMETER		TEST CONDITIONS†			SN54LS651 SN54LS652			SN74LS651 SN74LS652			UNIT
					MIN	TYP‡	MAX	MIN	TYP‡	MAX	
V_{IK}		V_{CC} = MIN,	I_I = −18 mA				−1.5			−1.5	V
V_{OH}		V_{CC} = MIN, V_{IL} = MAX,	V_{IH} = 2 V,	I_{OH} = −3 mA	2.4	3.4		2.4	3.4		V
				I_{OH} = −12 mA	2						
				I_{OH} = −15 mA				2			
V_{OL}		V_{CC} = MIN, V_{IL} = MAX,	V_{IH} = 2 V,	I_{OL} = 12 mA		0.25	0.4		0.25	0.4	V
				I_{OL} = 24 mA					0.35	0.5	
I_I	Control inputs	V_{CC} = MAX,	V_I = 7 V				0.1			0.1	mA
	A or B ports	V_{CC} = MAX,	V_I = 5.5 V				0.1			0.1	
I_{IH}	Control inputs	V_{CC} = MAX,	V_I = 2.7 V				20			20	μA
	A or B ports¶						20			20	
I_{IL}	Control inputs	V_{CC} = MAX,	V_I = 0.4 V				−0.4			−0.4	mA
	A or B ports¶						−0.4			−0.4	
I_{OS}§		V_{CC} = MAX,	V_O = 0 V		−40		−225	−40		−225	mA
I_{CC}	LS651	V_{CC} = MAX		Outputs high		95	145		95	145	mA
				Outputs low		103	165		103	165	
				Outputs disabled		103	165		103	165	
	LS652			Outputs high		95	145		95	145	
				Outputs low		103	165		103	165	
				Outputs disabled		120	180		120	180	

† For conditions shown as MIN or MAX, use the appropriate value specified under recommended operating conditions.
‡ All typical values are at V_{CC} = 5 V, T_A = 25°C.
§ Not more than one output should be shorted at a time, and duration of the short-circuit should not exceed one second.
¶ For I/O ports, the parameters I_{IH} and I_{IL} include the off-state output current.

switching characteristics, V_{CC} = 5 V, T_A = 25°C

PARAMETER	FROM (INPUT)	TO (OUTPUT)	TEST CONDITIONS	'LS651			'LS652			UNIT
				MIN	TYP	MAX	MIN	TYP	MAX	
t_{PLH}	Clock	Bus	R_L = 667 Ω, C_L = 45 pF, See Note 2		14	24		15	25	ns
t_{PHL}					23	35		24	36	ns
t_{PLH}	Bus	Bus			9	18		12	18	ns
t_{PHL}					20	30		13	20	ns
t_{PLH}	Select, with bus input high†	Bus			31	47		23	35	ns
t_{PHL}					22	33		21	32	ns
t_{PLH}	Select, with bus input low†				23	35		33	50	ns
t_{PHL}					19	30		15	23	ns
t_{PZH}	$\overline{G}$BA	A Bus			29	44		30	45	ns
t_{PZL}					40	60		36	54	ns
t_{PZH}	GAB	B Bus			19	29		20	30	ns
t_{PZL}					26	40		25	38	ns
t_{PHZ}	$\overline{G}$BA	A Bus	R_L = 667 Ω, C_L = 5 pF, See Note 2		25	38		25	38	ns
t_{PLZ}					19	30		19	30	ns
t_{PHZ}	GAB	B Bus			25	38		25	38	ns
t_{PLZ}					19	30		19	30	ns

t_{PLH} = propagation delay time, low-to-high-level output.
t_{PHL} = propagation delay time, high-to-low-level output
t_{PZH} = output enable time to high level
t_{PZL} = output enable time to low level
t_{PHZ} = output disable time from high level
t_{PLZ} = output disable time from low level
† These parameters are measured with the internal output state of the storage register opposite to that of the bus input.
NOTE 2: Load circuits and voltage waveforms are shown in Section 1.

schematics of inputs and outputs

EQUIVALENT OF GAB INPUTS

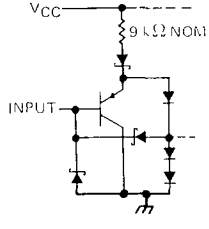

EQUIVALENT OF ALL OTHER INPUTS

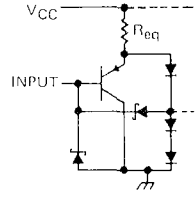

A and B: R_{eq} = 15 kΩ NOM
$\overline{G}$BA, CAB and CBA: R_{eq} = 10 kΩ NOM
SAB and SBA: R_{eq} = 6 kΩ NOM

TYPICAL OF ALL OUTPUTS

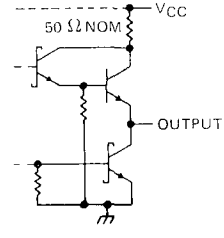

TEXAS INSTRUMENTS
POST OFFICE BOX 655012 • DALLAS, TEXAS 75265

absolute maximum ratings over operating free-air temperature range (unless otherwise noted)

Supply voltage, V_{CC} . . . . . 7 V
Input voltage: All inputs and A I/O ports 7V
B I/O ports . . . . . 5.5 V
Operating free-air temperature range: SN54LS653 . . . . . −55°C to 125°C
SN74LS653 . . . . . 0°C to 70°C
Storage temperature range . . . . . −65°C to 150°C

recommended operating conditions

			SN54LS653			SN74LS653			UNIT
			MIN	NOM	MAX	MIN	NOM	MAX	
V_{CC}	Supply voltage		4.5	5	5.5	4.75	5	5.25	V
V_{IH}	High-level input voltage		2			2			V
V_{IL}	Low-level input voltage				0.7			0.8	V
V_{OH}	High-level output voltage	A ports			5.5			5.5	V
I_{OH}	High-level output current	B ports			−12			−15	mA
I_{OL}	Low-level output current				12			24	mA
t_w	Pulse duration	CBA or CAB high	15			15			ns
		CBA or CAB low	30			30			
		Data high or low	30			30			
t_{su}	Setup time before CAB↑ or CBA↑	A or B	15			15			ns
t_h	Hold time after CAB↑ or CBA↑	A or B	0			0			ns
T_A	Operating free-air temperature		−55		125	0		70	°C

electrical characteristics over recommended operating free-air temperature range (unless otherwise noted)

PARAMETER		TEST CONDITIONS†			SN54LS653			SN74LS653			UNIT
					MIN	TYP‡	MAX	MIN	TYP‡	MAX	
V_{IK}		V_{CC} = MIN,	I_I = −18 mA				−1.5			−1.5	V
V_{OH}	B ports	V_{CC} = MIN, V_{IL} = MAX	V_{IH} = 2 V,	I_{OH} = −3 mA	2.4	3.4		2.4	3.4		V
				I_{OH} = −12 mA	2						
				I_{OH} = −15 mA				2			
I_{OH}	A ports	V_{CC} = MIN,	V_{OH} = 5.5 V				0.1			0.1	mA
V_{OL}		V_{CC} = MIN, V_{IL} = MAX	V_{IH} = 2 V,	I_{OL} = 12 mA		0.25	0.4		0.25	0.4	V
				I_{OL} = 24 mA					0.35	0.5	
I_I	Control inputs	V_{CC} = MAX,	V_I = 7 V				0.1			0.1	mA
	A or B ports	V_{CC} = MAX,	V_I = 5.5 V				0.1			0.1	
I_{IH}	Control inputs	V_{CC} = MAX,	V_I = 2.7 V				20			20	μA
	A or B ports¶						20			20	
I_{IL}	Control inputs	V_{CC} = MAX,	V_I = 0.4 V				−0.4			−0.4	mA
	A or B ports¶						−0.4			−0.4	
I_{OS}§	B ports	V_{CC} = MAX,	V_O = 0 V		−40		−225	−40		−225	mA
I_{CC}	LS653	V_{CC} = MAX		Outputs high		95	145		95	145	mA
				Outputs low		103	165		103	165	
				Outputs disabled		103	165		103	165	
	LS654			Outputs high		95	145		95	145	
				Outputs low		105	170		105	170	
				Outputs disabled		120	180		120	180	

† For conditions shown as MIN or MAX, use the appropriate value specified under recommended operating conditions.
‡ All typical values are at V_{CC} = 5 V, T_A = 25°C.
§ Not more than one output should be shorted at a time, and duration of the short-circuit should not exceed one second.
¶ For I/O ports, the parameters I_{IH} and I_{IL} include the off-state output current.

switching characteristics, V_{CC} = 5 V, T_A = 25°C

PARAMETER	FROM (INPUT)	TO (OUTPUT)	TEST CONDITIONS	MIN	TYP	MAX	UNIT
t_{PLH}	CBA	A Bus	R_L = 667 Ω, C_L = 45 pF, See Note 2		25	38	ns
t_{PHL}					26	39	
t_{PLH}	CAB	B Bus			15	23	ns
t_{PHL}					24	36	
t_{PLH}	A Bus	B Bus			10	18	ns
t_{PHL}					20	30	
t_{PLH}	B Bus	A Bus			21	32	ns
t_{PHL}					16	24	
t_{PLH}	SBA† (with B high)	A Bus			38	57	ns
t_{PHL}					26	39	
t_{PLH}	SBA† (with B low)	A Bus			34	51	ns
t_{PHL}					23	35	
t_{PLH}	SAB† (with A high)	B Bus			32	48	ns
t_{PHL}					22	33	
t_{PLH}	SAB† (with A low)	B Bus			24	36	ns
t_{PHL}					20	30	
t_{PLH}	$\overline{G}$BA	A Bus			23	35	ns
t_{PHL}					37	55	
t_{PZH}	GAB	B Bus	R_L = 667 Ω, C_L = 5 pF, See Note 2		19	29	ns
t_{PZL}					25	38	
t_{PHZ}	GAB	B Bus			26	39	ns
t_{PLZ}					19	29	

†These parameters are measured with the internal output state of the storage register opposite to that of the bus input.
NOTE 2: Load circuits and voltage waveforms are shown in Section 1.

schematics of inputs and outputs

EQUIVALENT OF GAB INPUTS

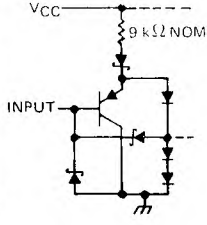

EQUIVALENT OF ALL OTHER INPUTS

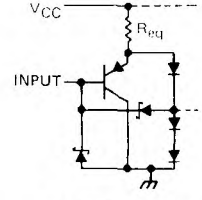

A and B: R_{eq} = 15 kΩ NOM
$\overline{G}$BA, CAB and CBA: R_{eq} = 10 kΩ NOM
SAB and SBA R_{eq} = 6 kΩ NOM

TYPICAL OF B OUTPUTS

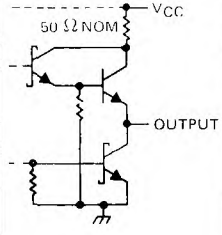

TYPICAL OF A OUTPUTS

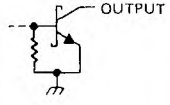

TEXAS INSTRUMENTS
POST OFFICE BOX 655012 • DALLAS, TEXAS 75265

D2351, APRIL 1977 – REVISED MARCH 1988

'LS668 . . . SYNCHRONOUS UP/DOWN DECADE COUNTERS
'LS669 . . . SYNCHRONOUS UP/DOWN BINARY COUNTERS

Programmable Look-Ahead Up/Down Binary/Decade Counters

- **Fully Synchronous Operation for Counting and Programming**
- **Internal Look-Ahead for Fast Counting**
- **Carry Output for n-Bit Cascading**
- **Fully Independent Clock Circuit**
- **Buffered Outputs**

TYPE	TYPICAL MAXIMUM CLOCK FREQUENCY		TYPICAL POWER DISSIPATION
	COUNTING UP	COUNTING DOWN	
'LS668, 'LS669	32 MHz	32 MHz	100 mW

SN54LS668, SN54LS669 . . . J OR W PACKAGE
SN74LS668, SN74LS669 . . . D OR N PACKAGE
(TOP VIEW)

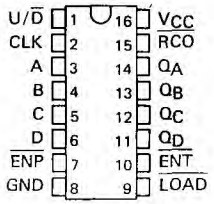

SN54LS668, SN54LS669 . . . FK PACKAGE
(TOP VIEW)

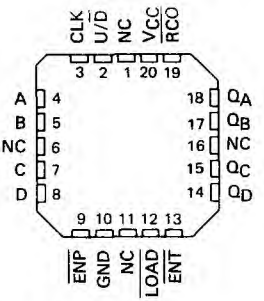

NC – No internal connection

description

These synchronous presettable counters feature an internal carry look-ahead for cascading in high-speed counting applications. The 'LS668 are decade counters and the 'LS669 are 4-bit binary counters. Synchronous operation is provided by having all flip-flops clocked simultaneously so that the outputs change coincident with each other when so instructed by the count-enable inputs and internal gating. This mode of operation helps eliminate the output counting spikes that are normally associated with asynchronous (ripple-clock) counters. A buffered clock input triggers the four master-slave flip-flops on the rising (positive-going) edge of the clock waveform.

These counters are fully programmable; that is, the outputs may each be preset to either level. The load input circuitry allows loading with the carry-enable output of cascaded counters. As loading is synchronous, setting up a low level at the load input disables the counter and causes the outputs to agree with the data inputs after the next clock pulse.

The carry look-ahead circuitry provides for cascading counters for n-bit synchronous applications without additional gating. Instrumental in accomplishing this function are two count-enable inputs and a carry output. Both count enable inputs ($\overline{P}$ and $\overline{T}$) must be low to count. The direction of the count is determined by the level of the up/down input. When the input is high, the counter counts up; when low, it counts down. Input $\overline{T}$ is fed forward to enable the carry output. The carry output thus enabled will produce a low-level output pulse when the count is maximum counting up or zero counting down. This low-level overflow carry pulse can be used to enable successive cascaded stages. Transitions at the enable $\overline{P}$ or $\overline{T}$ inputs are allowed regardless of the level of the clock input. All inputs are diode-clamped to minimize transmission-line effects, thereby simplifying system design.

These counters feature a fully independent clock circuit. Changes at control inputs (enable $\overline{P}$, enable $\overline{T}$, load, up/down) that will modify the operating mode have no effect until clocking occurs. The function of the counter (whether enabled, disabled, loading, or counting) will be dictated solely by the conditions meeting the stable setup and hold times.

The 'LS668 and 'LS669 are completely new designs. Compared to the original 'LS168 and 'LS169, they feature 0-nanosecond minimum hold time, reduced input currents I_{IH} and I_{IL}, and all buffered outputs.

PRODUCTION DATA documents contain information current as of publication date. Products conform to specifications per the terms of Texas Instruments standard warranty. Production processing does not necessarily include testing of all parameters.

logic diagram (positive logic)

SN54LS668, SN74LS668, DECADE COUNTERS

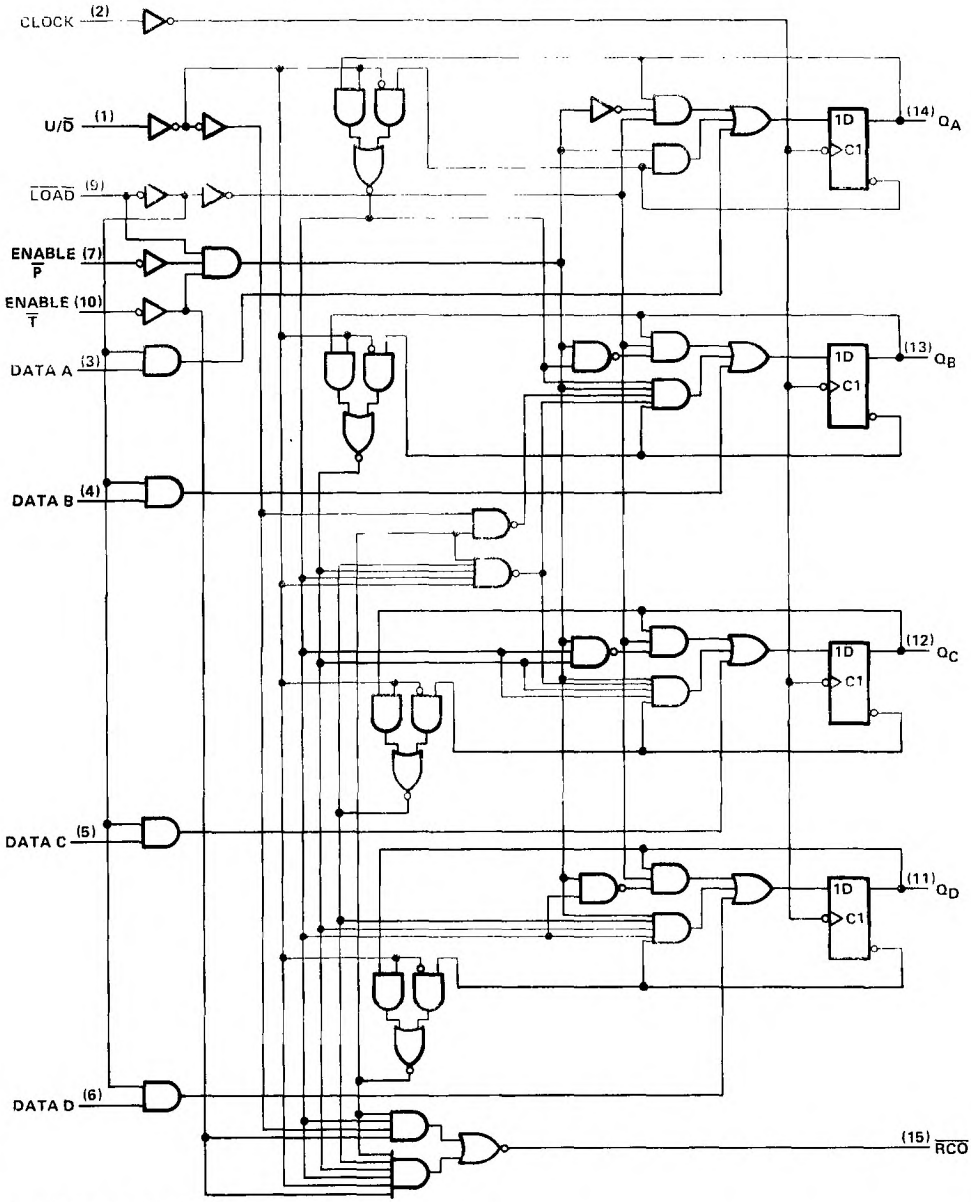

Pin numbers shown are for D, J, N, and W packages.

TEXAS INSTRUMENTS
POST OFFICE BOX 655012 • DALLAS, TEXAS 75265

logic diagram (positive logic) (continued)

SN54LS669, SN74LS669, BINARY COUNTERS

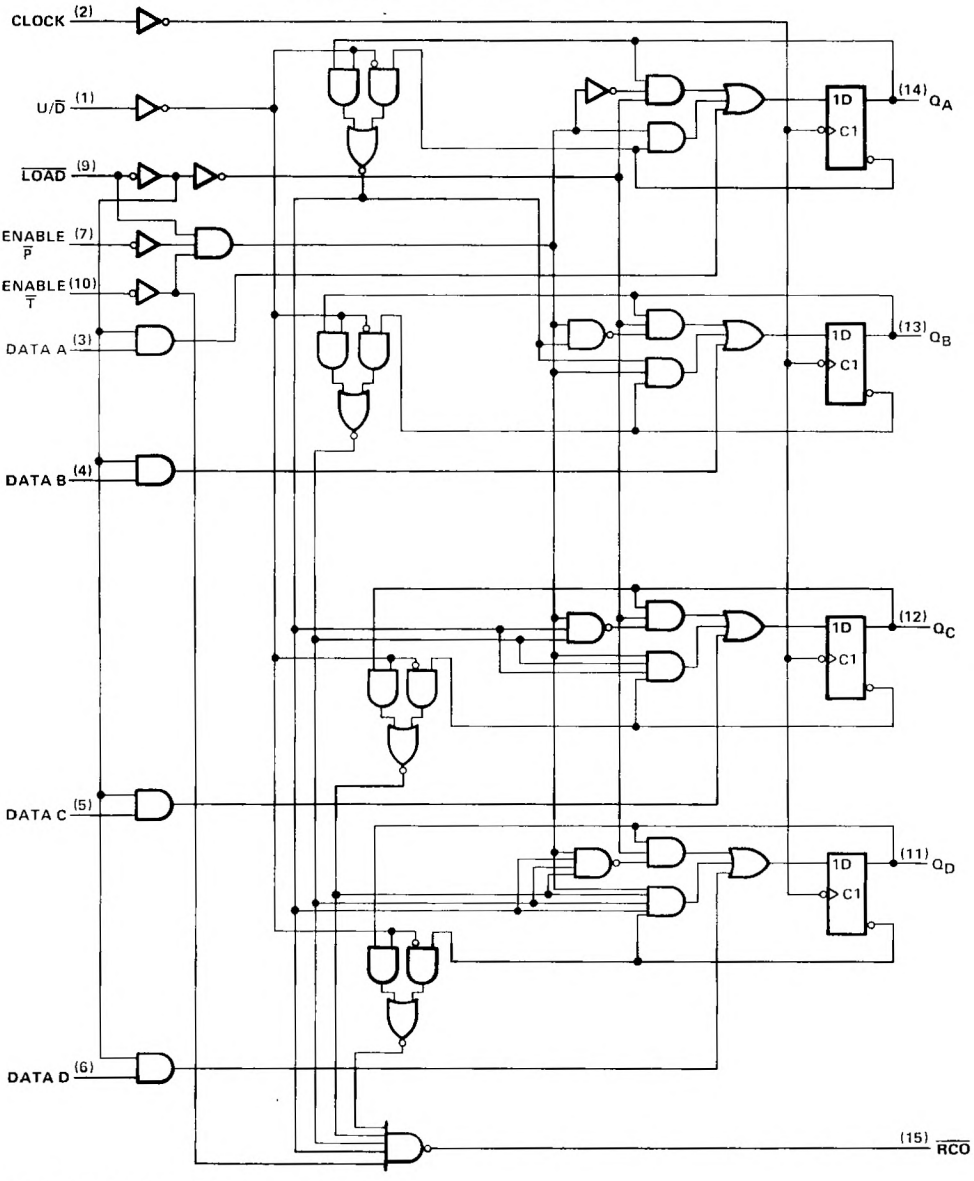

Pin numbers shown are for D, J, N, and W packages.

'LS668 DECADE COUNTERS

logic symbol†

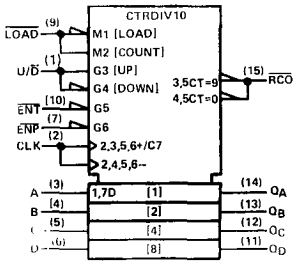

†This symbol is in accordance with ANSI/IEEE Std. 91-1984 and IEC Publication 617-12.
Pin numbers shown are for D, J, N, and W packages.

typical load, count, and inhibit sequences

Illustrated below is the following sequence:

1. Load (preset) to BCD seven
2. Count up to eight, nine (maximum), zero, one, and two
3. Inhibit
4. Count down to one, zero (minimum), nine, eight, and seven

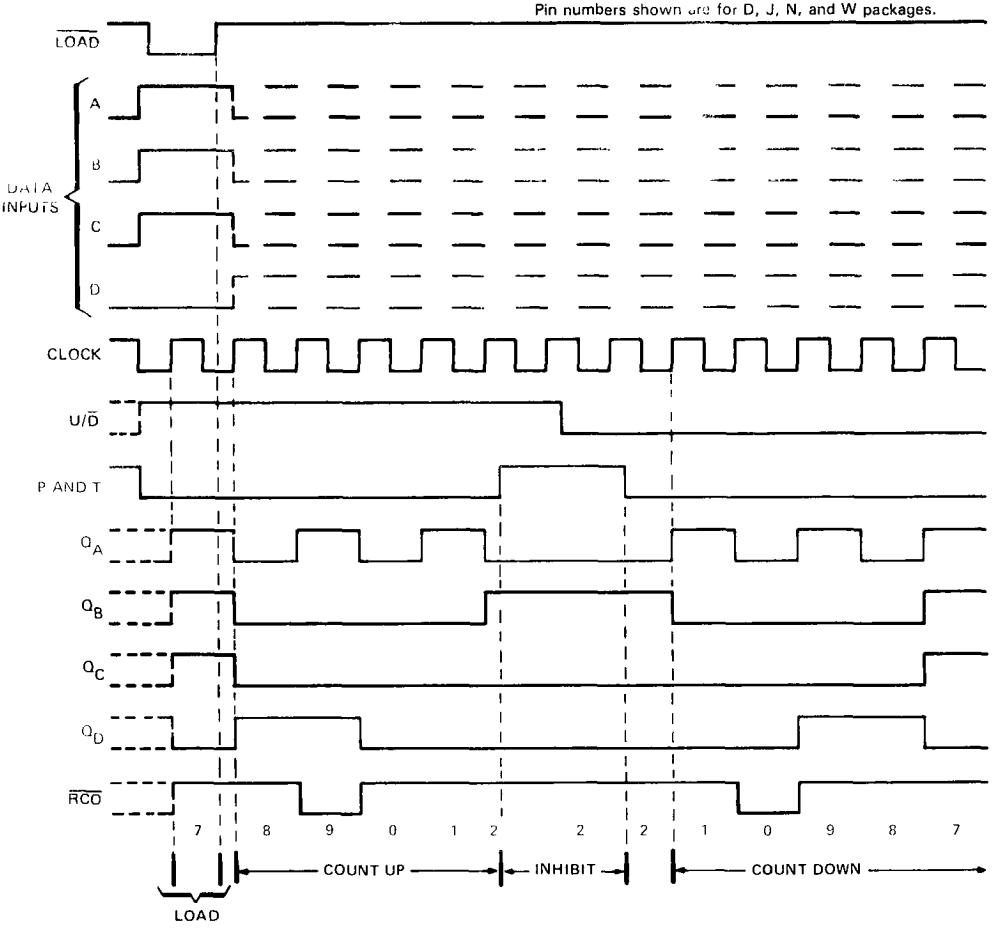

TEXAS INSTRUMENTS
POST OFFICE BOX 655012 • DALLAS, TEXAS 75265

'LS669 BINARY COUNTERS

typical load, count, and inhibit sequences

Illustrated below is the following sequence:

1. Load (preset) to binary thirteen
2. Count up to fourteen, fifteen (maximum), zero, one, and two
3. Inhibit
4. Count down to one, zero (minimum), fifteen, fourteen, and thirteen

logic symbol†

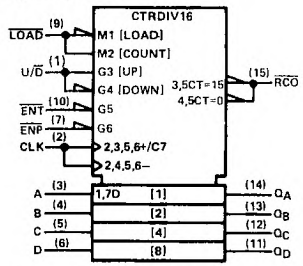

†This symbol is in accordance with ANSI/IEEE Std. 91-1984 and IEC Publication 617-12.
Pin numbers shown are for D, J, N, and W packages.

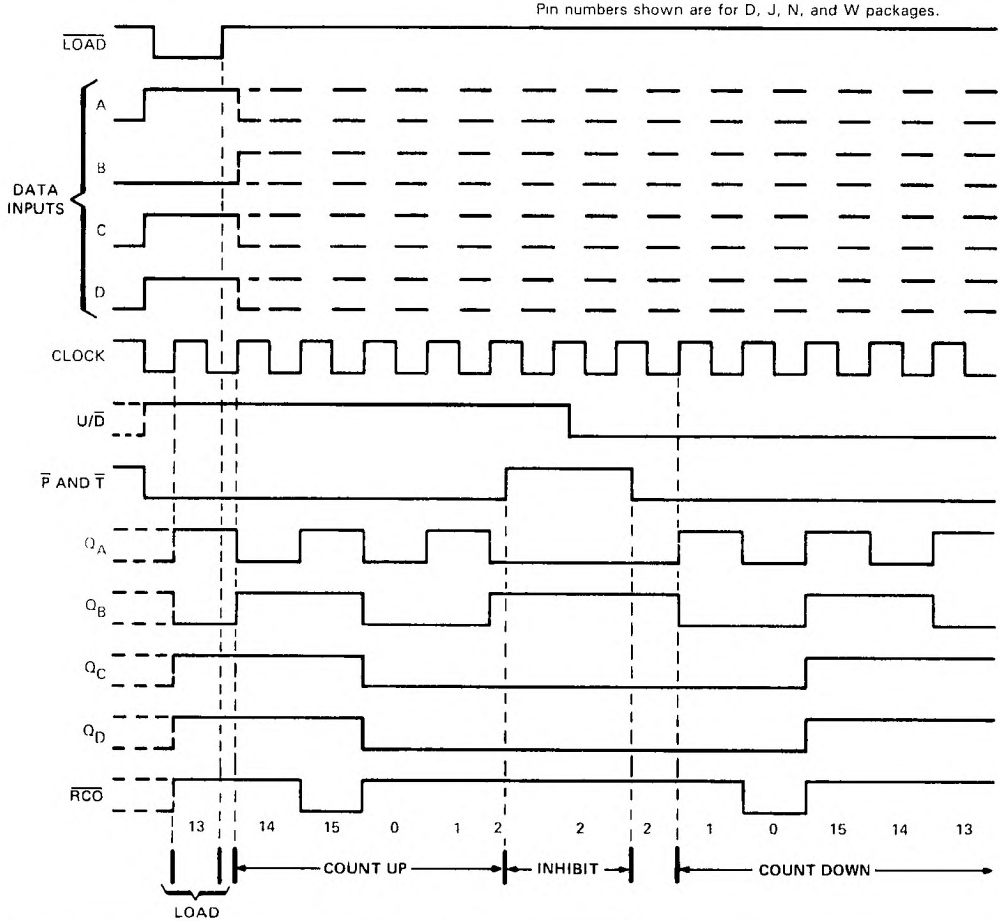

schematics of inputs and outputs

EQUIVALENT OF EACH INPUT

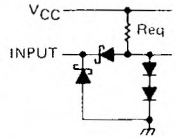

Load: R_{eq} 10 kΩ NOM
Data: R_{eq} 25 kΩ NOM
Clock, Enable P, $\overline{T}$, U/D: R_{eq} = 20 kΩ NOM

TYPICAL OF ALL OUTPUTS

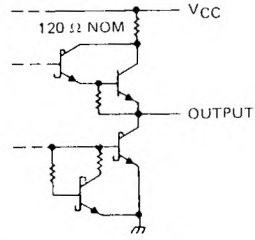

absolute maximum ratings over operating free-air temperature range (unless otherwise noted)

Supply voltage, V_{CC} (see Note 1) . . . . . 7 V
Input voltage . . . . . 7 V
Operating free-air temperature range: SN54LS668, SN54LS669 . . . . . −55°C to 125°C
SN74LS668, SN74LS669 . . . . . 0°C to 70°C
Storage temperature range . . . . . −65°C to 150°C

NOTE 1: Voltage values are with respect to network ground terminal

recommended operating conditions

		SN54LS668 SN54LS669			SN74LS668 SN74LS669			UNIT
		MIN	NOM	MAX	MIN	NOM	MAX	
Supply voltage, V_{CC}		4.5	5	5.5	4.75	5	5.25	V
High-level output current, I_{OH}				−400			−400	μA
Low-level output current, I_{OL}				4			8	mA
Clock frequency, f_{clock}		0		25	0		25	MHz
Width of clock pulse, $t_{w(clock)}$ (high or low) (see Figure 1)		20			20			ns
Setup time, t_{su} (see Figure 1)	nputs A, B, C, D	25			25			ns
	r $\overline{ENT}$	40			40			
	$\overline{LOAD}$	30			30			
	U/$\overline{D}$	45			45			
Hold time at any input with respect to clock, t_h (see Figure 1)		0			0			ns
Operating free-air temperature, T_A		−55		125	0		70	°C

TEXAS INSTRUMENTS
POST OFFICE BOX 655012 • DALLAS, TEXAS 75265

electrical characteristics over recommended operating free-air temperature range (unless otherwise noted)

PARAMETER			TEST CONDITIONS†		SN54LS668 SN54LS669			SN74LS668 SN74LS669			UNIT
					MIN	TYP‡	MAX	MIN	TYP‡	MAX	
V_{IH}	High-level input voltage				2			2			V
V_{IL}	Low-level input voltage						0.7			0.8	V
V_{IK}	Input clamp voltage		V_{CC} = MIN,	I_I = −18 mA			−1.5			−1.5	V
V_{OH}	High-level output voltage		V_{CC} = MIN, V_{IL} = V_{IL} max,	V_{IH} = 2 V, I_{OH} = −400 μA	2.5	3.4		2.7	3.4		V
V_{OL}	Low-level output voltage		V_{CC} = MIN, V_{IH} = 2 V, V_{IL} = V_{IL} max	I_{OL} = 4 mA		0.25	0.4		0.25	0.4	V
				I_{OL} = 8 mA					0.35	0.5	
I_I	Input current at maximum input voltage	A, B, C, D, $\overline{P}$, U/$\overline{D}$	V_{CC} = MAX,	V_I = 7 V			0.1			0.1	mA
		Clock, $\overline{T}$					0.1			0.1	
		$\overline{LOAD}$					0.2			0.2	
I_{IH}	High-level input current	A, B, C, D, $\overline{P}$, U/$\overline{D}$	V_{CC} = MAX,	V_I = 2.7 V			20			20	μA
		Clock, $\overline{T}$					20			20	
		$\overline{LOAD}$					40			40	
I_{IL}	Low-level input current	A, B, C, D, $\overline{P}$, U/$\overline{D}$	V_{CC} = MAX,	V_I = 0.4 V			−0.4			−0.4	mA
		Clock, $\overline{T}$					−0.4			−0.4	
		$\overline{LOAD}$					−0.8			−0.8	
I_{OS}	Short-circuit output current§		V_{CC} = MAX		−20		−100	−20		−100	mA
I_{CC}	Supply current		V_{CC} = MAX,	See Note 2		20	34		20	34	mA

†For conditions shown as MIN or MAX, use the appropriate value specified under recommended operating conditions.
‡All typical values are at V_{CC} = 5 V, T_A = 25°C.
§Not more than one output should be shorted at a time, and duration of the short-circuit should not exceed one second.
NOTE 2: I_{CC} is measured after applying a momentary 4.5 V, then ground, to the clock input with all other inputs grounded and the outputs open.

switching characteristics, V_{CC} = 5 V, T_A = 25°C

PARAMETER¶	FROM (INPUT)	TO (OUTPUT)	TEST CONDITIONS	MIN	TYP	MAX	UNIT
f_{max}			C_L = 15 pF, R_L = 2 kΩ, See Figures 2 and 3	25	32		MHz
t_{PLH}	CLK	$\overline{RCO}$			26	40	ns
t_{PHL}					40	60	
t_{PLH}	CLK	Any Q			18	27	ns
t_{PHL}					18	27	
t_{PLH}	$\overline{ENT}$	$\overline{RCO}$			11	17	ns
t_{PHL}					29	45	
t_{PLH}#	U/$\overline{D}$	$\overline{RCO}$			22	35	ns
t_{PHL}#					26	40	

¶ f_{max} = Maximum clock frequency.
t_{PLH} = propagation delay time, low-to-high-level output.
t_{PHL} = propagation delay time, high-to-low-level output.
Propagation delay time from up/down to ripple carry must be measured with the counter at either a minimum or a maximum count. As the logic level of the up/down input is changed, the ripple carry output will follow. If the count is minimum (0), the ripple carry output transition will be in phase. If the count is maximum (9 for 'LS668 or 15 for 'LS669), the ripple carry output will be out of phase.

PARAMETER MEASUREMENT INFORMATION

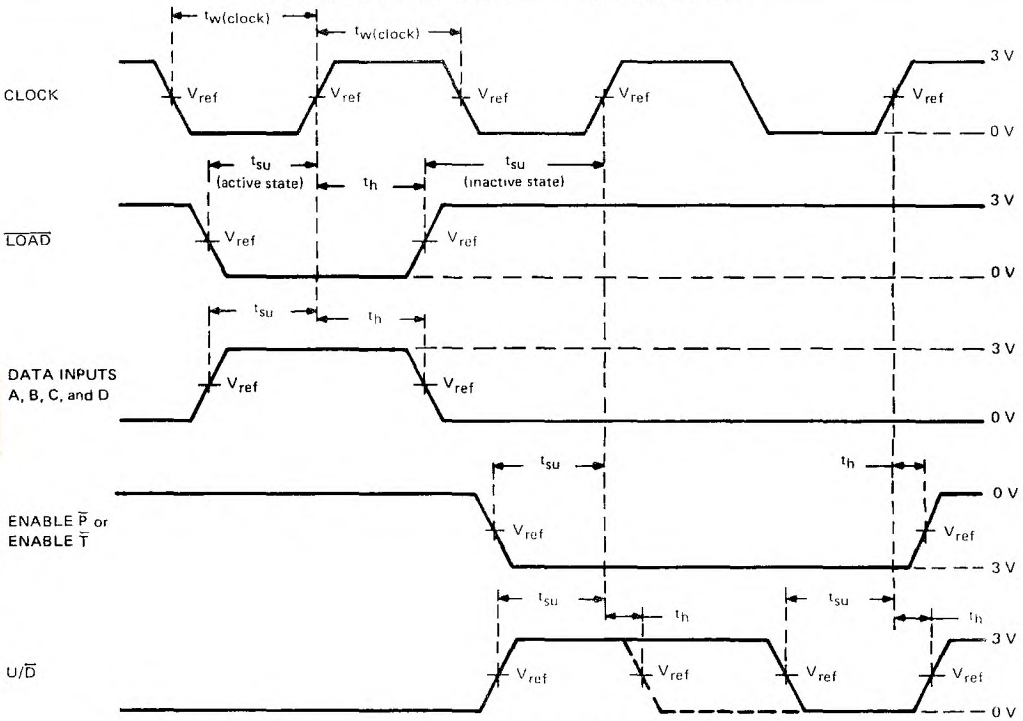

VOLTAGE WAVEFORMS

NOTES: A. The input pulses are supplied by a generator having the following characteristics: PRR ≤ 1 MHz, duty cycle ≤ 50%, $Z_{out} \approx 50\ \Omega$, $t_r \leq 15$ ns, $t_f \leq 6$ ns.
B. $V_{ref} = 1.3$ V.

FIGURE 1—PULSE WIDTHS, SETUP TIMES, HOLD TIMES

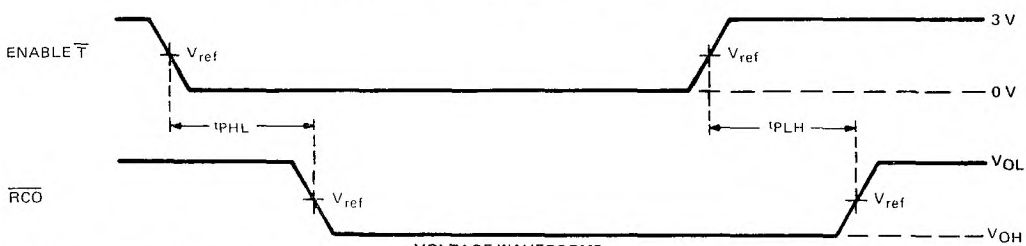

VOLTAGE WAVEFORMS

NOTES: A. The input pulse is supplied by a generator having the following characteristics: PRR ≤ 1 MHz, duty cycle ≤ 50%, $Z_{out} \approx 50\ \Omega$, $t_r \leq 15$ ns, $t_f \leq 6$ ns.
B. t_{PLH} and t_{PHL} from enable $\overline{T}$ input to ripple carry output assume that the counter is at the maximum count (Q_A and Q_D high for 'LS668, all Q outputs high for 'LS669).
C. $V_{ref} = 1.3$ V.
D. Propagation delay time from up/down to ripple carry must be measured with the counter at either a minimum or a maximum count. As the logic level of the up/down input is changed, the ripple carry output will follow. If the count is minimum (0) the ripple carry output transition will be in phase. If the count is maximum (9 for 'LS668, or 15 for 'LS669) the ripple carry output will be out of phase.

FIGURE 2—PROPAGATION DELAY TIMES TO CARRY OUTPUT

TEXAS INSTRUMENTS
POST OFFICE BOX 655012 • DALLAS, TEXAS 75265

PARAMETER MEASUREMENT INFORMATION

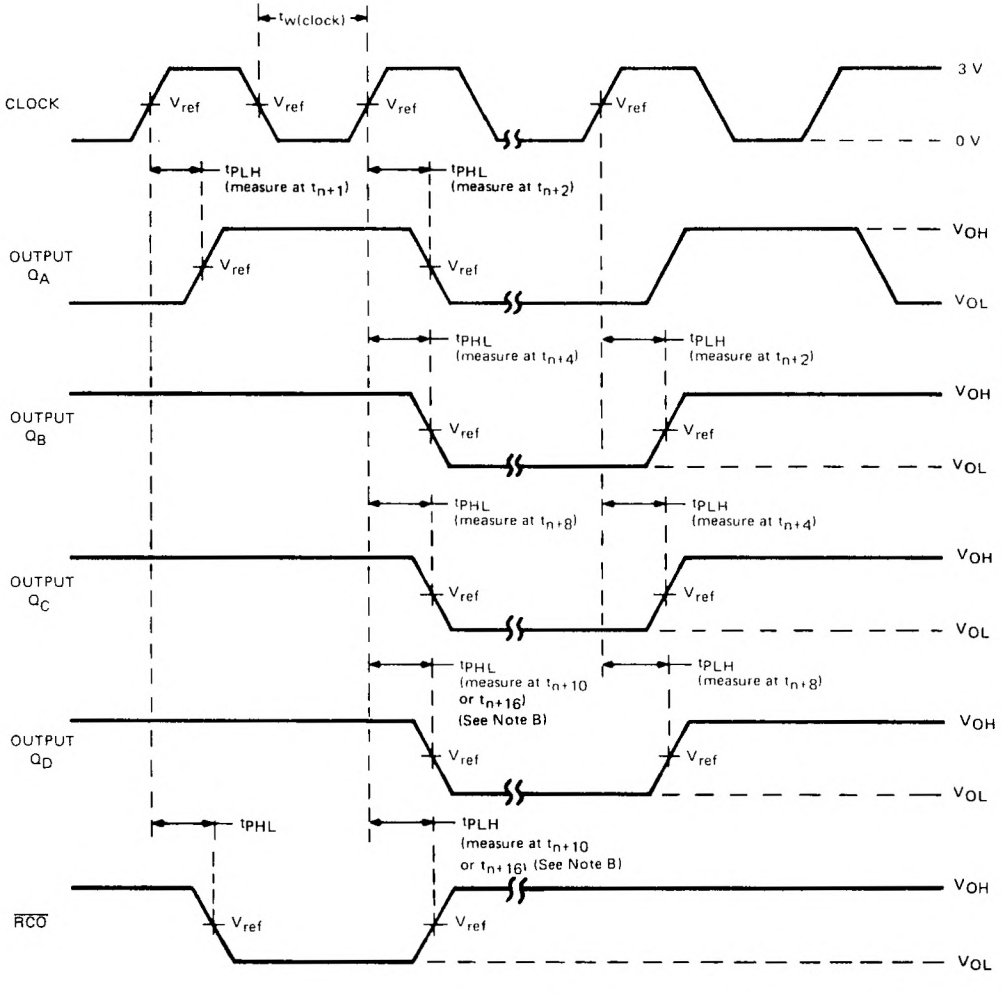

UP-COUNT VOLTAGE WAVEFORMS

NOTES: A. The input pulses are supplied by a generator having the following characteristics: PRR ≤ 1 MHz, duty cycle ≤ 50%, $Z_{out} \approx 50\ \Omega$, $t_r \leq 15$ ns, $t_f \leq 6$ ns. Vary PRR to measure f_{max}.
B. Outputs Q_D and carry are tested at t_{n+10} for the 'LS668, and at t_{n+16} for the 'LS669, where t_n is the bit-time when all outputs are low.
C. $V_{ref} = 1.3$ V.

FIGURE 3–PROPAGATION DELAY TIMES FROM CLOCK

BULLETIN NO. DL-S 7612122, MARCH 1974 – REVISED M··· ··

- **Separate Read/Write Addressing Permits Simultaneous Reading and Writing**
- **Fast Access Times . . . Typically 20 ns**
- **Organized as 4 Words of 4 Bits**
- **Expandable to 512 Words of n-Bits**
- **For Use as:**
  - **Scratch-Pad Memory**
  - **Buffer Storage between Processors**
  - **Bit Storage in Fast Multiplication Designs**
- **3-State Outputs**
- **SN54LS170 and SN74LS170 Are Similar But** Have Open-Collector Outputs

SN54LS670 . . . J OR W PACKAGE
SN74LS670 . . . D OR N PACKAGE
(TOP VIEW)

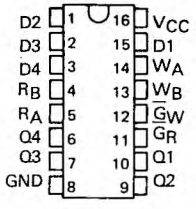

SN54LS670 . . . FK PACKAGE
(TOP VIEW)

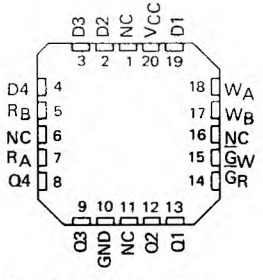

NC – No internal connection.

description

The SN54LS670 and SN74LS670 MSI 16-bit TTL register files incorporate the equivalent of 98 gates. The register file is organized as 4 words of 4 bits each and separate on-chip decoding is provided for addressing the four word locations to either write-in or retrieve data. This permits simultaneous writing into one location and reading from another word location.

Four data inputs are available which are used to supply the 4-bit word to be stored. Location of the word is determined by the write-address inputs A and B in conjunction with a write-enable signal. Data applied at the inputs should be in its true form. That is, if a high-level signal is desired from the output, a high-level is applied at the data input for that particular bit location. The latch inputs are arranged so that new data will be accepted only if both internal address gate inputs are high. When this condition exists, data at the D input is transferred to the latch output. When the write-enable input, $\overline{G}_W$, is high, the data inputs are inhibited and their levels can cause no change in the information stored in the internal latches. When the read-enable input, $\overline{G}_R$, is high, the data outputs are inhibited and go into the high-impedance state.

The individual address lines permit direct acquisition of data stored in any four of the latches. Four individual decoding gates are used to complete the address for reading a word. When the read address is made in conjunction with the read-enable signal, the word appears at the four outputs.

This arrangement—data-entry addressing separate from data-read addressing and individual sense line—eliminates recovery times, permits simultaneous reading and writing, and is limited in speed only by the write time (27 nanoseconds typical) and the read time (24 nanoseconds typical). The register file has a nondestructive readout in that data is not lost when addressed.

All inputs except read enable and write enable are buffered to lower the drive requirements to one Series 54LS/74LS standard load, and input-clamping diodes minimize switching transients to simplify system design. High-speed, double-ended AND-OR-INVERT gates are employed for the read-address function and have high-sink-current, three-state outputs. Up to 128 of these outputs may be bus connected for increasing the capacity up to 512 words. Any number of these registers may be paralleled to provide n-bit word length.

The SN54LS670 is characterized for operation over the full military temperature range of −55° C to 125° C; the SN74LS670 is characterized for operation from 0° C to 70° C.

[illegible]. TION DATA documents contain information [illegible] is of publication date. Products conform to [illegible] specifications per the terms of Texas Instruments standard warranty. Production processing does not necessarily include testing of all parameters.

logic symbol†

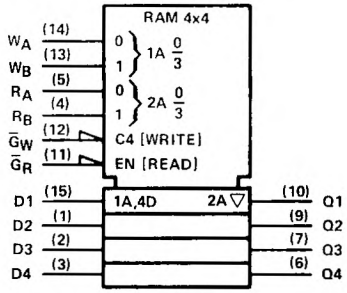

†This symbol is in accordance with ANSI/IEEE Std. 91-1984 and IEC Publication 617-12.
Pin numbers shown are for D, J, N, and W packages.

WRITE FUNCTION TABLE (SEE NOTES A, B, AND C)

WRITE INPUTS			WORD			
W_B	W_A	$\overline{G}_W$	0	1	2	3
L	L	L	Q = D	Q_0	Q_0	Q_0
L	H	L	Q_0	Q = D	Q_0	Q_0
H	L	L	Q_0	Q_0	Q = D	Q_0
H	H	L	Q_0	Q_0	Q_0	Q = D
X	X	H	Q_0	Q_0	Q_0	Q_0

READ FUNCTION TABLE (SEE NOTES A AND D)

READ INPUTS			OUTPUTS			
R_B	R_A	$\overline{G}_R$	Q1	Q2	Q3	Q4
L	L	L	W0B1	W0B2	W0B3	W0B4
L	H	L	W1B1	W1B2	W1B3	W1B4
H	L	L	W2B1	W2B2	W2B3	W2B4
H	H	L	W3B1	W3B2	W3B3	W3B4
X	X	H	Z	Z	Z	Z

NOTES: A. H = high level, L = low level, X = irrelevant, Z = high impedance (off)
B. (Q = D) = The four selected internal flip flop outputs will assume the states applied to the four external data inputs
C. Q_0 = the level of Q before the indicated input conditions were established.
D. W0B1 = The first bit of word 0, etc

schematics of inputs and outputs

EQUIVALENT OF EACH INPUT

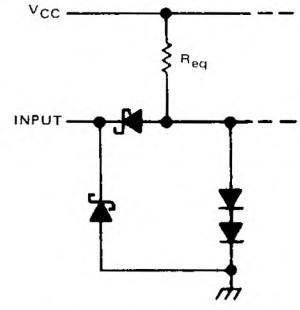

Any D, R, or W: R_{eq} = 20 kΩ NOM
G_R: R_{eq} = 6.67 kΩ NOM
G_W: R_{eq} = 10 kΩ NOM

TYPICAL OF ALL OUTPUTS

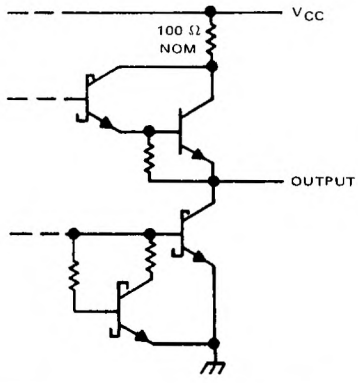

TEXAS INSTRUMENTS
POST OFFICE BOX 655012 • DALLAS, TEXAS 75265

logic diagram (positive logic)

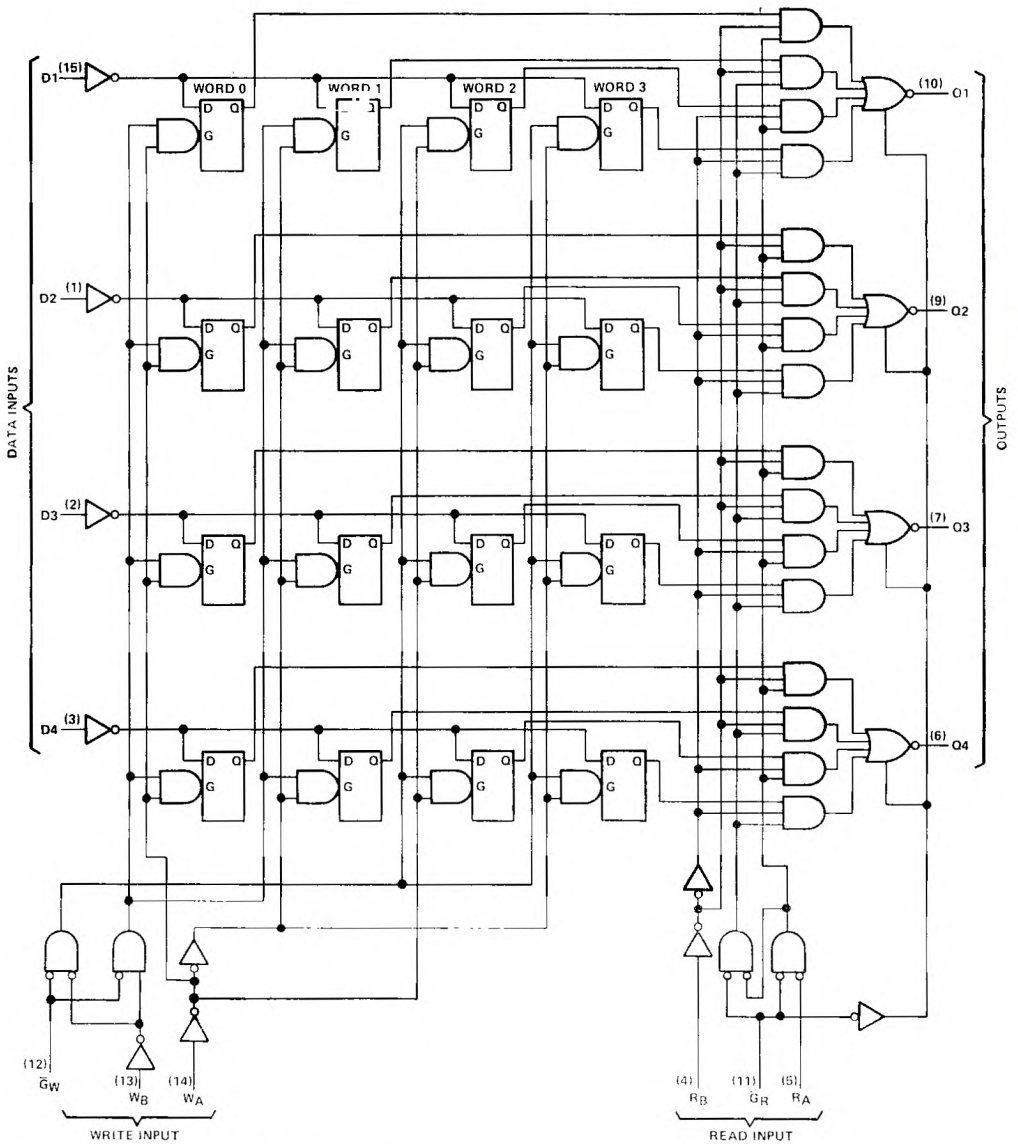

Pin numbers shown are for D, J, N, and W packages.

absolute maximum ratings over operating free-air temperature range (unless otherwise noted)

Supply voltage, V_{CC} (see Note 1) . . . . . 7 V
Input voltage . . . . . 7 V
Off-state output voltage . . . . . 5.5 V
Operating free-air temperature range: SN54LS670 . . . . . −55°C to 125°C
SN74LS670 . . . . . 0°C to 70°C
Storage temperature range . . . . . −65°C to 150°C

recommended operating conditions

		SN54LS670			SN74LS670			UNIT
		MIN	NOM	MAX	MIN	NOM	MAX	
Supply voltage, V_{CC}		4.5	5	5.5	4.75	5	5.25	V
High-level output current, I_{OH}				−1			−2.6	mA
Low-level output current, I_{OL}				4			8	mA
Width of write-enable or read-enable pulse, t_w		25			25			ns
Setup times, high- or low-level data (see Figure 2)	Data input with respect to write enable, $t_{su(D)}$	10			10			ns
	Write select with respect to write enable, $t_{su(W)}$	15			15			ns
Hold times, high- or low-level data (see Note 2 and Figure 2)	Data input with respect to write enable, $t_{h(D)}$	15			15			ns
	Write select with respect to write enable, $t_{h(W)}$	5			5			ns
Latch time for new data, t_{latch} (see Note 3)		25			25			ns
Operating free-air temperature range, T_A		−55		125	0		70	°C

NOTES: 1. Voltage values are with respect to network ground terminal.
2. Write-select setup time will protect the data written into the previous address. If protection of data in the previous address is not required, $t_{su(W)}$ can be ignored as any address selection sustained for the final 30 ns of the write-enable pulse and during $t_{h(W)}$ will result in data being written into that location. Depending on the duration of the input conditions, one or a number of previous addresses may have been written into.
3. Latch time is the time allowed for the internal output of the latch to assume the state of new data. See Figure 2. This is important only when attempting to read from a location immediately after that location has received new data.

TEXAS INSTRUMENTS
POST OFFICE BOX 655012 • DALLAS, TEXAS 75265

electrical characteristics over recommended operating free-air temperature range (unless otherwise noted)

PARAMETER		TEST CONDITIONS†			SN54LS670 MIN	SN54LS670 TYP‡	SN54LS670 MAX	SN74LS670 MIN	SN74LS670 TYP‡	SN74LS670 MAX	UNIT
V_{IH}	High-level input voltage				2			2			V
V_{IL}	Low-level input voltage						0.7			0.8	V
V_{IK}	Input clamp voltage	V_{CC} = MIN,	I_I = −18 mA				−1.5			−1.5	V
V_{OH}	High-level output voltage	V_{CC} = MIN, V_{IL} = V_{IL} max	V_{IH} = 2 V,	I_{OH} = −1 mA	2.4	3.4					V
				I_{OH} = −2.6 mA				2.4	3.1		
V_{OL}	Low-level output voltage	V_{CC} = MIN, V_{IL} = V_{IL} max	V_{IH} = 2 V,	I_{OL} = 4 mA		0.25	0.4		0.25	0.4	V
				I_{OL} = 8 mA					0.35	0.5	
I_{OZH}	Off-state output current, high-level voltage applied	V_{CC} = MAX,	V_{IH} = 2 V,	V_O = 2.7 V			20			20	μA
I_{OZL}	Off-state output current, low-level voltage applied	V_{CC} = MAX,	V_{IH} = 2 V,	V_O = 0.4 V			−20			−20	μA
I_I	Input current at maximum input voltage	V_{CC} = MAX, V_I = 7 V	Any D, R, or W				0.1			0.1	mA
			$\overline{G}_W$				0.2			0.2	
			$\overline{G}_R$				0.3			0.3	
I_{IH}	High-level input current	V_{CC} = MAX, V_I = 2.7 V	Any D, R, or W				20			20	μA
			$\overline{G}_W$				40			40	
			$\overline{G}_R$				60			60	
I_{IL}	Low-level input current	V_{CC} = MAX, V_I = 0.4 V	Any D, R, or W				−0.4			−0.4	mA
			$\overline{G}_W$				−0.8			−0.8	
			$\overline{G}_R$				−1.2			−1.2	
I_{OS}	Short-circuit output current§	V_{CC} = MAX			−30		−130	−30		−130	mA
I_{CC}	Supply current	V_{CC} = MAX,	See Note 4			30	50		30	50	mA

†For conditions shown as MIN or MAX, use the appropriate value specified under recommended operating conditions.
‡All typical values are at V_{CC} = 5 V, T_A = 25°C.
§Not more than one output should be shorted at a time, and duration of the short-circuit should not exceed one second.
NOTE 4: Maximum I_{CC} is guaranteed for the following worst-case conditions: 4.5 V is applied to all data inputs and both enable inputs, all address inputs are grounded and all outputs are open.

switching characteristics, V_{CC} = 5 V, T_A = 25°C

PARAMETER	FROM (INPUT)	TO (OUTPUT)	TEST CONDITIONS	MIN	TYP	MAX	UNIT
t_{PLH}	Read select	Any Q	C_L = 15 pF, R_L = 2 kΩ, See Figures 1 and 2		23	40	ns
t_{PHL}					25	45	
t_{PLH}	Write enable	Any Q	C_L = 15 pF, R_L = 2 kΩ, See Figures 1 and 3		26	45	ns
t_{PHL}					28	50	
t_{PLH}	Data	Any Q			25	45	ns
t_{PHL}					23	40	
t_{PZH}	Read enable	Any Q	C_L = 15 pF, R_L = 2 kΩ, See Figures 1 and 4		15	35	ns
t_{PZL}					22	40	
t_{PHZ}			C_L = 5 pF, R_L = 2 kΩ, See Figures 1 and 4		30	50	ns
t_{PLZ}					16	35	

PARAMETER MEASUREMENT INFORMATION

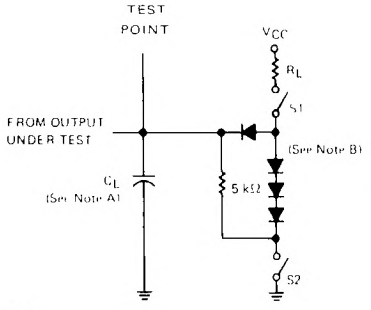

NOTES: A. C_L includes probe and jig capacitance.
B. All diodes are 1N3064 or equivalent

LOAD CIRCUIT

FIGURE 1

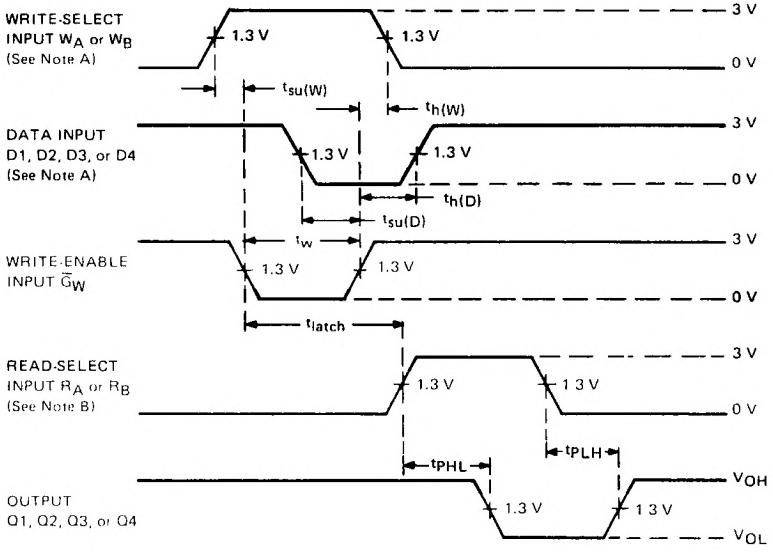

VOLTAGE WAVEFORMS (S1 AND S2 ARE CLOSED)

NOTES: A. High-level input pulses at the select and data inputs are illustrated; however, times associated with low-level pulses are measured from the same reference points.
B. When measuring delay times from a read-select input, the read-enable input is low.
C. Input waveforms are supplied by generators having the following characteristics: PRR ≤ 2 MHz, $Z_{out} \approx 50\ \Omega$, duty cycle ≈ 50%, $t_r \leq 15$ ns, $t_f \leq 6$ ns.

FIGURE 2

TEXAS INSTRUMENTS
POST OFFICE BOX 655012 • DALLAS, TEXAS 75265

PARAMETER MEASUREMENT INFORMATION

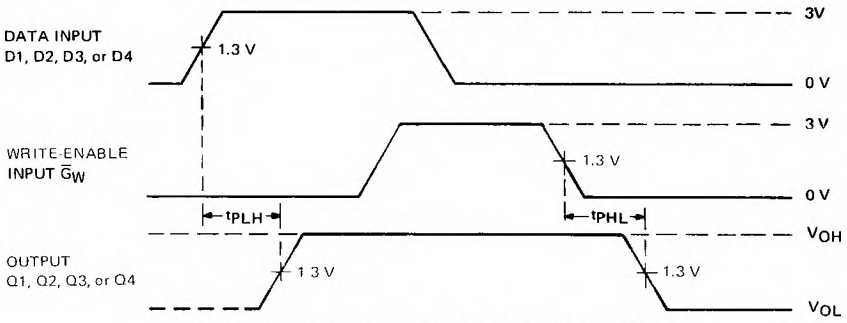

VOLTAGE WAVEFORM 1 (S1 AND S2 ARE CLOSED)

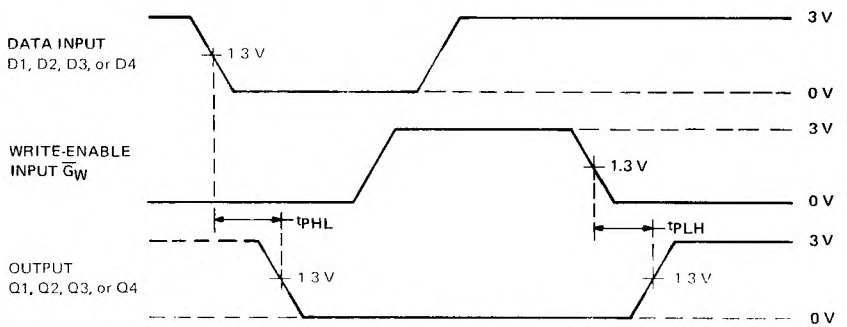

VOLTAGE WAVEFORM 2 (S1 AND S2 ARE CLOSED)

NOTES: A. Each select address is tested. Prior to the start of each of the above tests both write and read address inputs are stabilized with $W_A = R_A$ and $W_B = R_B$. During the test G_R is low.

B. Input waveforms are supplied by generators having the following characteristics: PRR ≤ 1 MHz, $Z_{out} \approx 50\ \Omega$, duty cycle ≤ 50%, $t_r \leq 15$ ns, $t_f \leq 6$ ns.

FIGURE 3

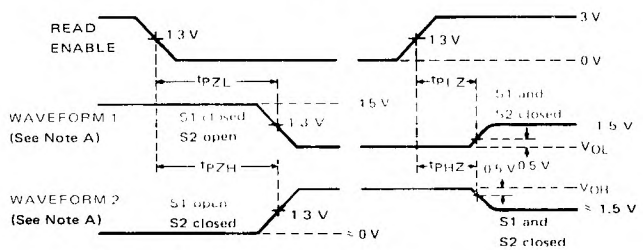

VOLTAGE WAVEFORMS
ENABLE AND DISABLE TIMES, THREE-STATE OUTPUTS

NOTES. A. Waveforms 1 is for an output with internal conditions such that the output is low except when disabled by the read-enable input. Waveform 2 is for an output with internal conditions such that the output is high except when disabled by the read enable input.

B. When measuring delay times from the read enable input, both read-select inputs have been established at steady states.

C. Input waveforms are supplied by generators having the following characteristics: PRR ≤ 1 MHz, $Z_{out} \approx 50\ \Omega$, duty cycle ≤ 50%, $t_r \leq 15$ ns, $t_f \leq 6$ ns.

FIGURE 4

D2638, JANUARY 1981 – REVISED MARCH 1988

- **4-Bit Universal Shift Registers/Latches**
- **Multiplexed Outputs for Shift Register or Latched Data**
- **Choice of Direct SR Clear ('LS671) or Synchronous SR Clear ('LS672)**
- **3-State Outputs Drive Bus Lines Directly**
- **Expandable to Any Word Length**

SN54LS671, SN54LS672 . . . J PACKAGE
SN74LS671, SN74LS672 . . . DW OR N PACKAGE
(TOP VIEW)

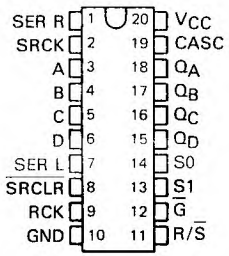

SN54LS671, SN54LS672 . . . FK PACKAGE
(TOP VIEW)

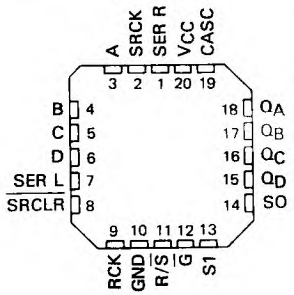

description

The 'LS671 and 'LS672 each contain a 4-bit universal shift register (similar to the 'LS194A) and a 4-bit storage register (similar to the 'LS175) multiplexed to a 3-state output stage (similar to the 'LS258). The user has the option of selecting the shift or storage register via the register/shift select input R/$\overline{S}$. The 'LS671 has a direct-overriding shift register clear while the 'LS672 features a synchronous shift register clear. The shift register has four distinct modes of operation, namely:

Inhibit clock (do nothing)
Shift right (in the direction Q_A toward Q_D)
Shift left (in the direction Q_D toward Q_A)
Parallel (broadside) load

A cascade output for the shift register is provided so that full shift register functionality is provided even while the outputs are in the high-impedance mode. The cascade output presents Q_A data in the shift-left mode, Q_D data in the shift-right mode.

Both the shift register clock and the latch clock are triggered on the positive transition. The output control ($\overline{G}$) activates Q_A thru Q_D when low, it places Q_A thru Q_D into the high-impedance state when high.

PRODUCTION DATA documents contain information current as of publication date. Products conform to specifications per the terms of Texas Instruments standard warranty. Production processing does not necessarily include testing of all parameters.

logic diagram (positive logic)

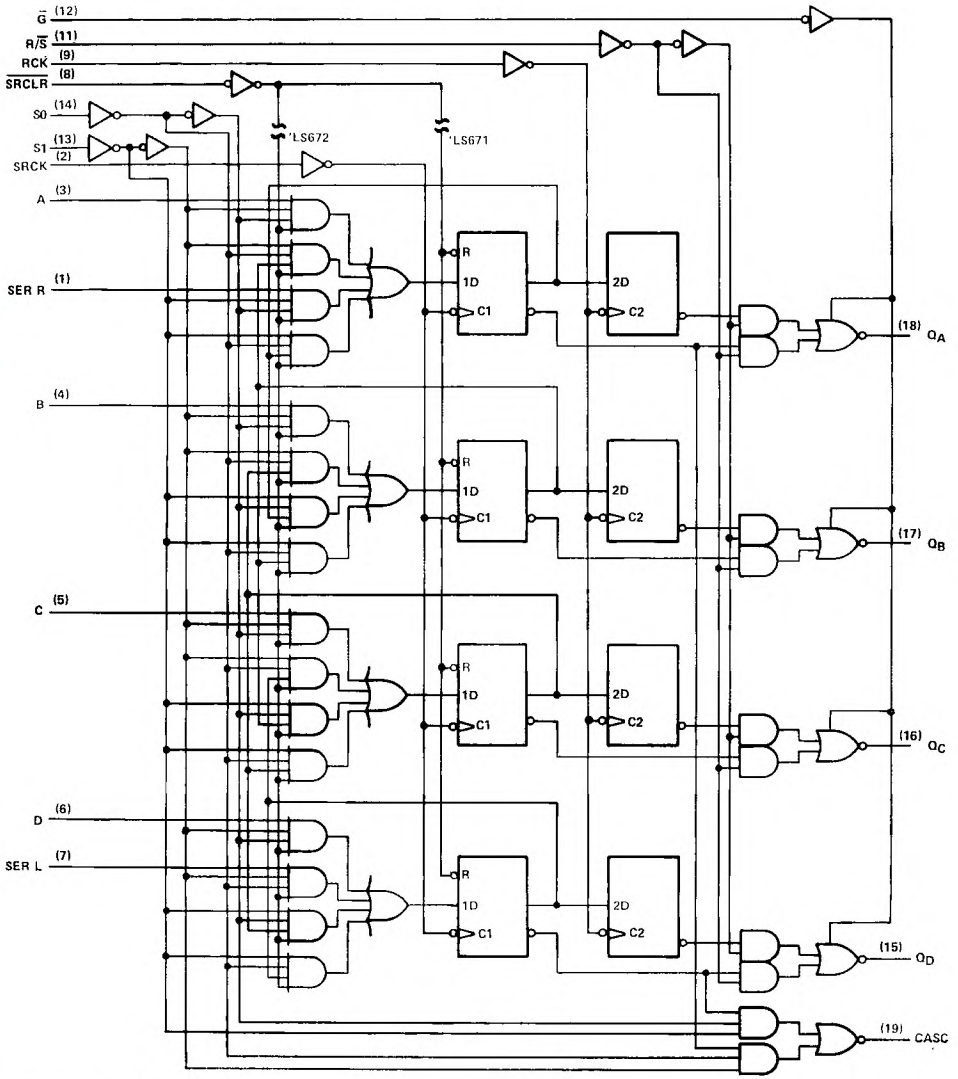

Pin numbers shown are for DW, J and N packages.

TEXAS INSTRUMENTS
POST OFFICE BOX 655012 • DALLAS, TEXAS 75265

logic symbols†

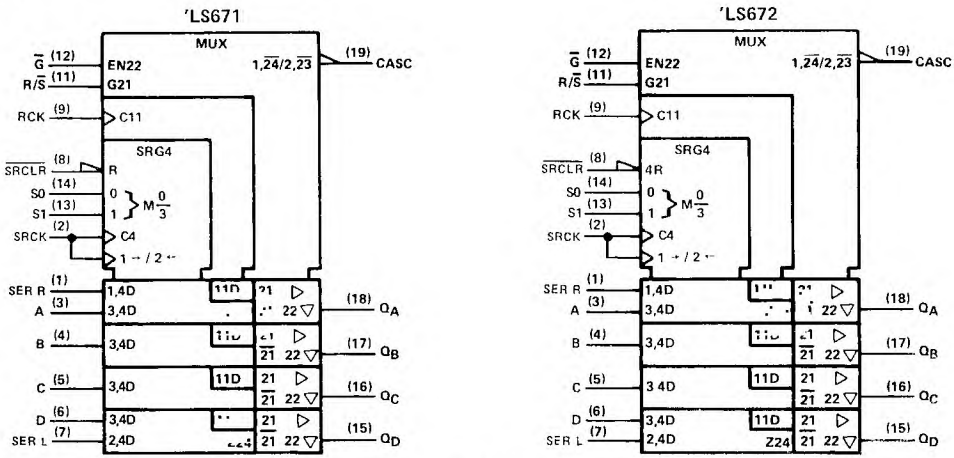

†These symbols are in accordance with ANSI/IEEE Std. 91-1984 and IEC Publication 617-12.
Pin numbers shown are for DW, J, and N packages.

FUNCTION TABLE

			SR MODE		SRCK		SERIAL INPUTS		PARALLEL INPUTS				PARALLEL OUTPUTS				
$\overline{G}$	R/$\overline{S}$	$\overline{SRCLR}$	S1	S0	LS671	LS672	SI	SR	A	B	C	D	Q_A	Q_B	Q_C	Q_D	CASC‡
H	↑	L	X	X	X	↑	X	X	X	X	X	X	L	L	L	L	(‡)
H	↓	H	X	X	↑	↑	X	X	X	X	X	X	Q_{A0}	Q_{B0}	Q_{C0}	Q_{D0}	(‡)
H	↑	H	↑	↑	X	X	X	X	X	X	X	X	Q_{An}	Q_{Bn}	Q_{Cn}	Q_{Dn}	H
L	L	H	L	H	↑	↑	X	H	X	X	X	X	H	Q_{An}	Q_{Bn}	Q_{Cn}	Q_{Cn}
L	L	H	↑	H	↑	↑	X	L	X	X	X	X	L	Q_{An}	Q_{Bn}	Q_{Cn}	Q_{Cn}
L	↑	H	H	↑	↑	↑	H	X	X	X	X	X	Q_{Bn}	Q_{Cn}	Q_{Dn}	H	Q_{Bn}
L	↓	H	H	↓	↑	↑	L	X	X	X	X	X	Q_{Bn}	Q_{Cn}	Q_{Dn}	L	Q_{Bn}
L	L	H	H	H	↑	↑	X	X	a	b	c	d	a	b	c	d	H
H	X	X	L	H	↑	↑	X	X	X	X	X	X	Z	Z	Z	Z	Q_{Cn}
H	X	X	H	L	↑	↑	X	X	X	X	X	X	Z	Z	Z	Z	Q_{Bn}
L	H	X	X	X	X	X	X	X	X	X	X	X	Internal register contents				(‡)

When the output control $\overline{G}$ is high, the 3-state outputs are disabled to the high impedance state; however, sequential operation of the shift register and the output at CASC are not affected

H = high level (steady state)
L = low level (steady state)
X = irrelevant (any input, including transitions)
↑ = transition from low to high level
a, b, c, d = the level of steady-state input at A, B, C, or D, respectively
Q_{A0}, Q_{B0}, Q_{C0}, Q_{D0} = the level of Q_A, Q_B, Q_C, or Q_D, respectively, before the indicated steady-state input conditions were established
Q_{An}, Q_{Bn}, Q_{Cn} = the level of Q_A, Q_B, or Q_C, respectively, before the most-recent transition of the clock
Z = high-impedance state
‡The cascade output displays the D bit of the shift register in mode 1 (S1, S0 = L, H), the A bit in mode 2 (S1, S0 = HL), and is inactive (H) in modes 0 and 3 (S1, S0 = LL and HH)

schematics of inputs and outputs

EQUIVALENT OF A THRU D, SER L, AND SER R INPUTS

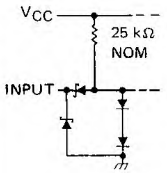

EQUIVALENT OF ALL OTHER INPUTS

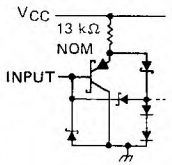

TYPICAL OF Q_A THRU Q_D OUTPUTS

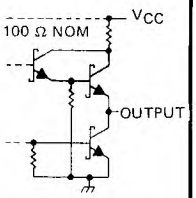

TYPICAL OF CASCADE OUTPUT

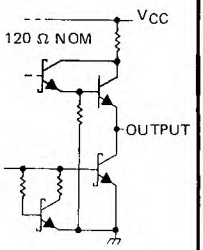

absolute maximum ratings over operating free-air temperature range (unless otherwise noted)

Supply voltage V_{CC} (see Note 1) . . . . . 7 V
Input voltage . . . . . 7 V
Off-state output voltage . . . . . 5.5 V
Operating free-air temperature range: SN54LS671, SN54LS672 . . . . . −55°C to 125°C
SN74LS671, SN74LS672 . . . . . 0°C to 70°C
Storage temperature range . . . . . −65°C to 150°C

NOTE 1: Voltage values are with respect to the network ground terminal.

recommended operating conditions

			SN54LS'			SN74LS'			UNIT
			MIN	NOM	MAX	MIN	NOM	MAX	
V_{CC}	Supply voltage		4.5	5	5.5	4.75	5	5.25	V
I_{OH}	High-level output current	Cascade out			−0.4			−0.4	mA
		Q_A, Q_B, Q_C, Q_D			−1			−2.6	
I_{OL}	Low-level output current	Cascade out			4			8	mA
		Q_A, Q_B, Q_C, Q_D			12			24	
t_w	Width of SRCK, RCK, or SRCLR ('LS671 only) input pulse		30			30			ns
t_{su}	Inactive state setup time	$\overline{S}$ before ↑ ('LS671 only)	30			30			ns
t_{su}	Setup time	$\overline{S}$1 to SRCK ↑	45			45			ns
		$\overline{S}$ ↓ ('LS671 only) to ↑	25			25			
		A, B, C, D to ↑	30			30			
		SRCK ↑ to RCK ↑	30			30			
		SER to SRCK ↑	35			35			
t_h	Hold time	Any input from SRCK ↑	0			0			ns
T_A	Operating free-air temperature		−55		125	0		70	°C

TEXAS INSTRUMENTS
POST OFFICE BOX 655012 • DALLAS, TEXAS 75265

electrical characteristics over recommended operating free-air temperature range (unless otherwise noted)

PARAMETER			TEST CONDITIONS†		SN54LS'			SN74LS'			UNIT
					MIN	TYP‡	MAX	MIN	TYP‡	MAX	
V_{IH}	High-level input voltage				2			2			V
V_{IL}	Low-level input voltage						0.7			0.8	V
V_{IK}	Input clamp voltage		V_{CC} = MIN, I_I = −18 mA				−1.5			−1.5	V
V_{OH}	High-level output voltage	$Q_A - Q_D$	V_{CC} = MIN,	I_{OH} = −1 mA	2.4	3.1					V
		$Q_A - Q_D$	V_{IH} = 2 V,	I_{OH} = −2.6 mA				2.4	3.1		
		CASC	V_{IL} = V_{IL} max	I_{OH} = −400 μA	2.5	3.2		2.7	3.2		
V_{OL}	Low-level output voltage	$Q_A - Q_D$	V_{CC} = MIN, V_{IH} = 2 V	I_{OL} = 12 mA		0.25	0.4		0.25	0.4	V
		$Q_A - Q_D$		I_{OL} = 24 mA					0.35	0.5	
		CASC		I_{OL} = 4 mA		0.25	0.4		0.25	0.4	
		CASC		I_{OL} = 8 mA					0.35	0.5	
I_{OZH}	Off-state output current, high-level voltage applied	$Q_A - Q_D$	V_{CC} = MAX, V_{IH} = 2 V,	V_O = 2.7 V, V_{IL} = V_{IL} max			20			20	μA
I_{OZL}	Off-state output current, low-level voltage applied	$Q_A - Q_D$	V_{CC} = MAX, V_{IH} = 2 V,	V_O = 0.4 V, V_{IL} = V_{IL} max			−20			−20	μA
I_I	Input current at maximum input voltage		V_{CC} = MAX,	V_I = 7 V			0.1			0.1	mA
I_{IH}	High-level input current		V_{CC} = MAX,	V_I = 2.7 V			20			20	μA
I_{IL}	Low-level input current	A, B, C, D	V_{CC} = MAX,	V_I = 0.4 V			−0.4			−0.4	mA
		All others					−0.2			−0.2	
I_{OS}	Short-circuit output current§	$Q_A - Q_D$	V_{CC} = MAX,	V_O = 0 V	−30		−130	−30		−130	mA
		CASC			−20		−100	−20		−100	
I_{CC}	Supply current	All outputs low	V_{CC} = MAX,	See Note 2		35	70		35	70	mA
		All outputs high	All outputs	See Note 3		30	65		30	65	
		Q_A thru Q_D, at Hi-Z	open	See Note 4		37	70		37	70	

†For conditions shown as MIN or MAX, use the appropriate value specified under recommended operating conditions.
‡All typical values are at V_{CC} = 5 V, T_A = 25°C.
§Not more than one output should be shorted at a time and duration of the short-circuit should not exceed one second.

NOTES: 2. I_{CCL} is tested after two 0-V to 4.5 V to 0-V pulses have been applied to SRCK and RCK while S0 is at 4.5 V and all other inputs are grounded.
3. I_{CCH} is tested after two 4.5-V to 0-V to 4.5-V pulses have been applied to SRCK and RCK while all other inputs are at 4.5 V.
4. I_{CCZ} is tested after two 0-V to 4.5-V to 0-V pulses have been applied to SRCK and RCK while S0 and $\overline{G}$ are at 4.5 V and all other inputs are grounded.

switching characteristics, V_{CC} = 5 V, T_A = 25°C, see note 5

PARAMETER	FROM (INPUT)	TO (OUTPUT)	TEST CONDITIONS		'LS671			'LS672			UNIT
			MODE	LOAD	MIN	TYP	MAX	MIN	TYP	MAX	
t_{PLH}	SRCK ↑	CASCADE	SHIFT LEFT OR RIGHT	R_L = 2 kΩ, C_L = 15 pF		31	45		31	45	ns
t_{PHL}						14	25		14	25	
t_{PLH}	S0, S1					11	20		12	20	ns
t_{PHL}						11	20		12	20	
t_{PHL}	$\overline{S}$ ↑		SR CLEAR						19	30	ns
t_{PHL}	$\overline{SF}$ ↓					19	30				ns
t_{PLH}	SRCK ↑	$Q_A - Q_D$	SHIFT LEFT OR RIGHT	R_L = 667 Ω, C_L = 45 pF		10	20		10	20	ns
t_{PHL}						16	25		16	25	
t_{PLH}			SR LOAD			10	20		10	20	ns
t_{PHL}						15	25		15	25	
t_{PHL}			SR CLEAR						17	30	ns
t_{PHL}	$\overline{R}$ ↓					21	30				ns
t_{PLH}	RCK ↑		LATCH			10	20		10	20	ns
t_{PHL}						15	25		15	25	
t_{PLH}	R/$\overline{S}$ ↑		MUX			12	25		13	25	ns
t_{PHL}						15	25		15	25	
t_{PLH}	R/$\overline{S}$ ↓					17	25		17	25	ns
t_{PHL}						16	25		16	25	
t_{PZH}	$\overline{G}$ ↓		3-STATE ENABLE			16	25		16	25	ns
t_{PZL}						19	30		19	30	
t_{PHZ}	$\overline{G}$ ↑		3-STATE DISABLE	R_L = 667 Ω, C_L = 5 pF		16	25		16	25	ns
t_{PLZ}						16	25		16	25	

NOTE 5: Load circuits and voltage waveforms are shown in Section 1.

TYPICAL APPLICATION DATA

The 'LS671 or 'LS672 can easily be expanded utilizing the cascade output and the SER L and SER R inputs. A typical expansion is shown below.

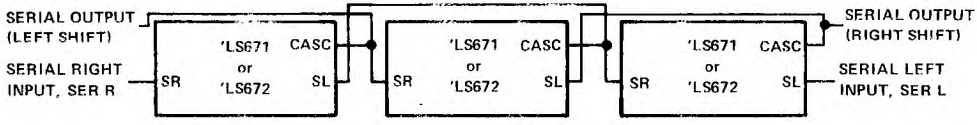

FIGURE 1 – 'LS671 'LS672 EXPANDED TO 12 BITS, (3 PACKAGES)

Any desired word length may be obtained using the scheme shown. Corresponding control pins of all the packages are tied in common, i.e., all S0 pins are connected together, all S1 pins are connected together, etc.

TEXAS INSTRUMENTS
POST OFFICE BOX 655012 • DALLAS, TEXAS 75265

D2421, MARCH 1985 – RE. M/ 1988

'LS673

- **16-Bit Serial-In, Serial-Out Shift Register with 16-Bit Parallel-Out Storage Register**
- **Performs Serial-to-Parallel Conversion**

'LS674

- **16-Bit Parallel-In, Serial-Out Shift Register**
- **Performs Parallel-to-Serial Conversion**

description

SN54LS673, SN74LS673

The 'LS673 is a 16-bit shift register and a 16-bit storage register in a single 24-pin package. A three-state input/output (SER/Q15) port to the shift register allows serial entry and/or reading of data. The storage register is connected in a parallel data loop with the shift register and may be asynchronously cleared by taking the store-clear input low. The storage register may be parallel loaded with shift-register data to provide shift-register status via the parallel outputs. The shift register can be parallel loaded with the storage-register data upon command.

A high logic level at the chip-level ($\overline{CS}$) input disables both the shift-register clock and the storage register clock and places SER/Q15 in the high-impedance state. The store-clear function is not disabled by the chip select.

Caution must be exercised to prevent false clocking of either the shift register or the storage register via the chip-select input. The shift clock should be low during the low-to-high transition of chip select and the store clock should be low during the high-to-low transition of chip select.

SN54LS674, SN74LS674

The 'LS674 is a 16-bit parallel-in, serial-out shift register. A three-state input/output (SER/Q15) port provides access for entering a serial data or reading the shift-register word in a recirculating loop.

The device has four basic modes of operation:

1) Hold (do nothing)
2) Write (serially via input/output)
3) Read (serially)
4) Load (parallel via data inputs)

Low-to-high-level changes at the chip select input should be made only when the clock input is low to prevent false clocking.

SN54LS673 . . . J OR W PACKAGE
SN74LS673 . . . DW OR N PACKAGE
(TOP VIEW)

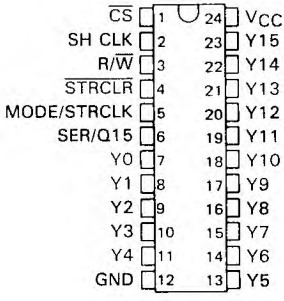

SN54LS673 . . . FK PACKAGE
(TOP VIEW)

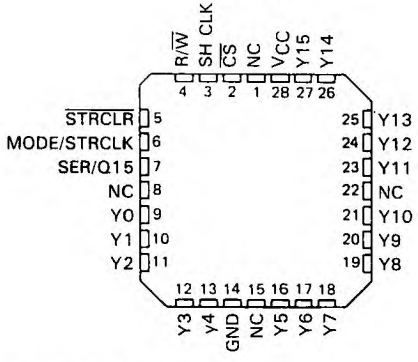

NC – No internal connection

PRODUCTION DATA documents contain information current as of publication date. Products conform to specifications per the terms of Texas Instruments standard warranty. Production processing does not necessarily include testing of all parameters.

SN54LS674 . . . J OR W PACKAGE
SN74LS674 . . . DW OR N PACKAGE
(TOP VIEW)

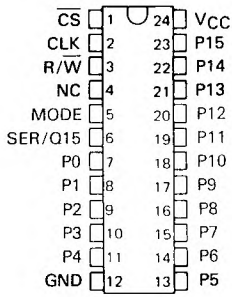

SN54LS674 . . . FK PACKAGE
(TOP VIEW)

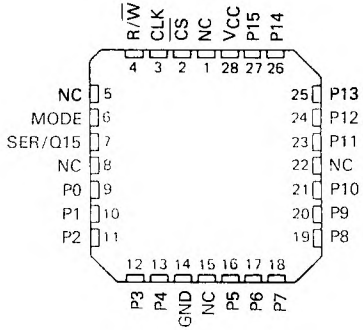

2

TTL Devices

'LS673

FUNCTION TABLE

INPUTS					SER/ Q15	SHIFT REGISTER FUNCTIONS				STORAGE REGISTER FUNCTIONS	
CS	R/W	SH CLK	STRCLR	MODE/ STRCLK		SHIFT	READ FROM SERIAL OUTPUT	WRITE INTO SERIAL INPUT	PARALLEL LOAD	CLEAR	LOAD
H	X	X	X	X	Z	NO	NO	NO	NO		NO
X	X	X	L	X						YES	
L	L	↓	X	X	Z	YES	NO	YES	NO		
L	H	X	X	X	Q15		YES	NO			NO
L	H	↓	X	L	Q14n	YES	YES	NO	NO		NO
L	H	↓	L	H	L	NO	YES		YES	YES	NO
L	H	↓	H	H	Y15n	NO	YES		YES	NO	NO
L	L	X	H	↑	Z		NO		NO	NO	YES

'LS674 FUNCTION TABLE

INPUTS				SER/	OPERATION
CS	R/W	MODE	CLK	Q15	
H	X	X	X	Z	Do nothing
L	L	X	↓	Z	Shift and write (serial load)
L	H	L	↓	Q14n	Shift and read
L	H	H	↓	P15	Parallel load

H = high level (steady state)
L = low level (steady state)
↑ = transition from low to high level
↓ = transition from high to low level
X = irrelevant (any input including transitions)
Z = high impedance, input mode
Q14n = content of 14th bit of the shift register before the most recent ↓ transition of the clock
Q15 = present content of 15th bit of the shift register
Y15n = content of the 15th bit of the storage register before the most recent ↓ transition of the clock.
P15 = level of input P15

TEXAS INSTRUMENTS
POST OFFICE BOX 655012 • DALLAS, TEXAS 75265

logic symbols†

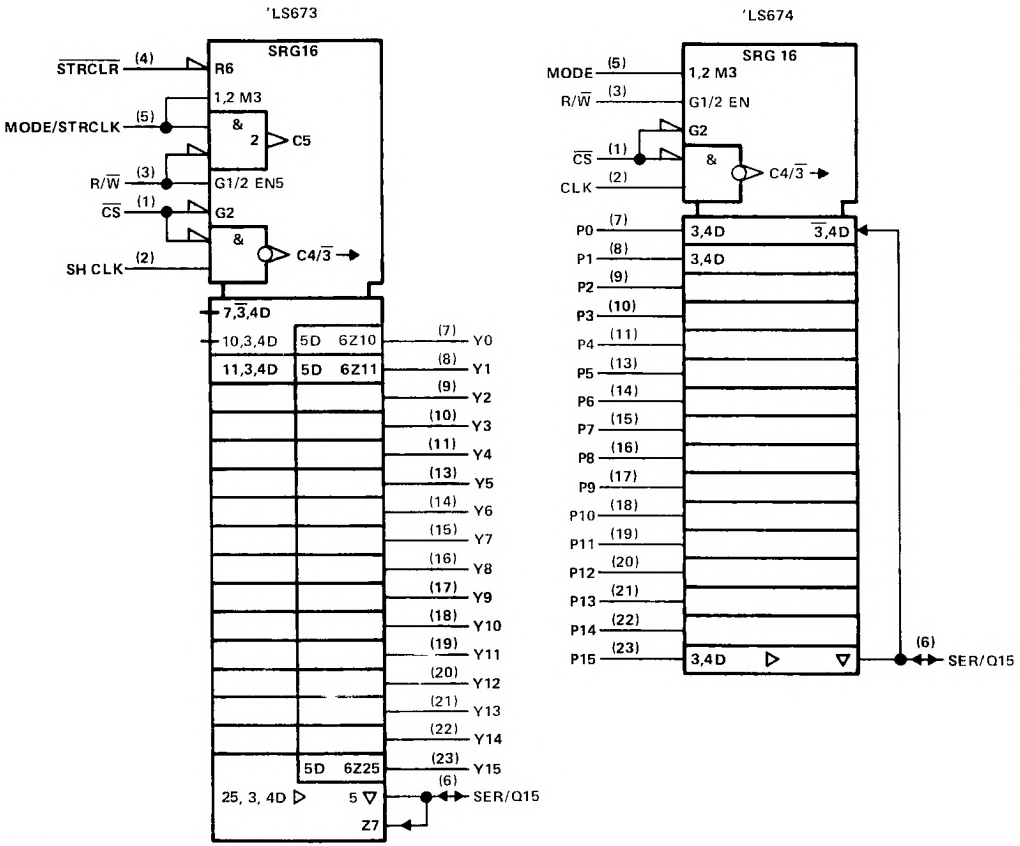

†These symbols are in accordance with ANSI/IEEE Std. 91-1984 and IEC Publication 617-12.
Pin numbers shown are for DW, J, N, and W packages.

functional block diagrams

SN54LS673, SN74LS673

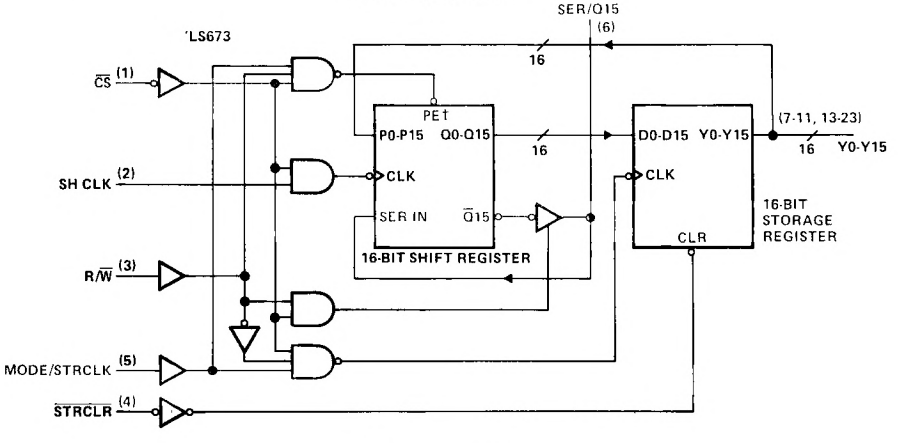

SN54LS674, SN74LS674

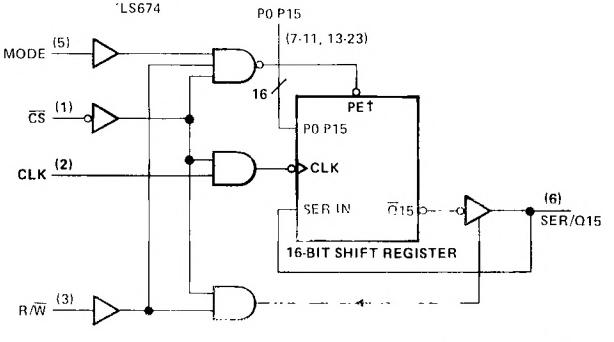

†When PE is active, data is synchronously parallel loaded into the shift registers from the 16 P inputs and no shifting takes place.
Pin numbers shown are for DW, J, N, and W packages

TEXAS INSTRUMENTS
POST OFFICE BOX 655012 • DALLAS, TEXAS 75265

schematics of inputs and outputs

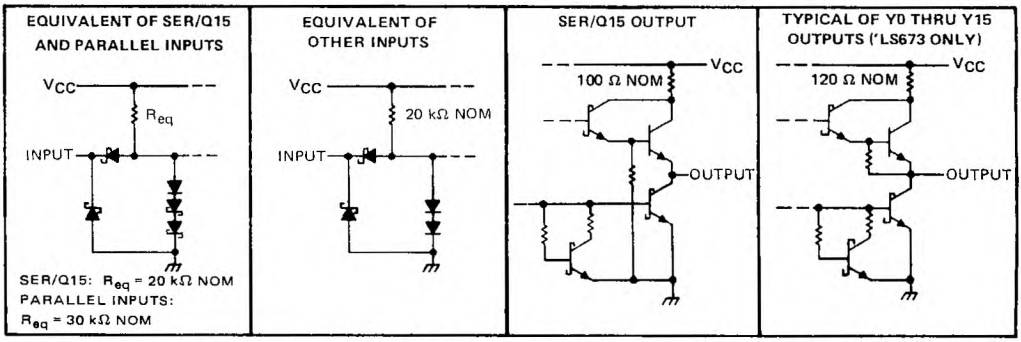

absolute maximum ratings over operating free-air temperature range (unless otherwise noted)

Supply voltage, V_{CC} (see Note 1) . . . . . 7 V
Input voltage: SER/Q15 . . . . . 5.5 V
All others . . . . . 7 V
Off-state output voltage . . . . . 5.5 V
Operating free-air temperature range: SN54LS673, SN54LS674 . . . . . −55°C to 125°C
SN74LS673, SN74LS674 . . . . . 0°C to 70°C
Storage temperature range . . . . . −65°C to 150°C

NOTE 1. Voltage values are with respect to network ground terminal.

recommended operating conditions

				SN54LS'			SN74LS'			UNIT
				MIN	NOM	MAX	MIN	NOM	MAX	
V_{CC}	Supply voltage			4.5	5	5.5	4.75	5	5.25	V
I_{OH}	High-level output current	SER/Q15				−1			−2.6	mA
		Y0 thru Y15				−0.4			−0.4	
I_{OL}	Low-level output current	SER/Q15				12			24	mA
		Y0 thru Y15				4			8	
f_{clock}	Clock frequency			0		20	0		20	MHz
$t_{w(clock)}$	Width of clock input pulse			20			20			ns
$t_{w(clear)}$	Width of clear input pulse			20			20			ns
t_{su}	Setup time	SER/Q15		20			20			ns
		P0 thru P15		20			20			
		Mode		35			35			
		R/$\overline{W}$, $\overline{CS}$		35			35			
		SH CLK ↓ to Mode/STR CLK ↑ See Note 2		25			25			
t_h	Hold time	SER/Q15		0			0			ns
		P0 thru P15	'LS673	0			0			
			'LS674	5.0			5.0			
		Mode		0			0			
T_A	Operating free-air temperature			−55		125	0		70	°C

NOTE 2: This setup time ensures the storage register will see stable data from the shift register.

electrical characteristics over recommended operating free-air temperature range (unless otherwise noted)

PARAMETER			TEST CONDITIONS†		SN54LS'			SN74LS'			UNIT
					MIN	TYP‡	MAX	MIN	TYP‡	MAX	
V_{IH}	High-level input voltage				2			2			V
V_{IL}	Low-level input voltage						0.7			0.8	V
V_{IK}	Input clamp voltage		V_{CC} = MIN,	I_I = −18 mA			−1.5			−1.5	V
V_{OH}	High-level output voltage	SER/Q15	V_{CC} = MIN,	V_{IH} = 2 V,	2.4	3.2		2.4	3.1		V
		Y0 thru Y15¶	V_{IL} = V_{IL}max,	I_{OH} = MAX	2.5	3.4		2.7	3.4		
V_{OL}	Low-level output voltage	SER/Q15	V_{CC} = MIN, V_{IH} = 2 V, V_{IL} = V_{IL}max	I_{OL} = 12 mA		0.25	0.4		0.25	0.4	V
				I_{OL} = 24 mA					0.35	0.5	
		Y0 thru Y15¶		I_{OL} = 4 mA		0.25	0.4		0.25	0.4	
				I_{OL} = 8 mA					0.35	0.5	
I_{OZH}	Off-state output current, high-level voltage applied	SER/Q15	V_{CC} = MAX, V_{IL} = V_{IL}max,	V_{IH} = 2 V, V_O = 2.7 V			40			40	μA
I_{OZL}	Off-state output current, low-level voltage applied	SER/Q15	V_{CC} = MAX, V_{IL} = V_{IL}max,	V_{IH} = 2 V, V_O = 0.4 V			−0.4			−0.4	mA
I_I	Input current at maximum input voltage	SER/Q15	V_{CC} = MAX	V_I = 5.5 V			0.1			0.1	mA
		Others		V_I = 7 V			0.1			0.1	
I_{IH}	High-level input current	SER/Q15	V_{CC} = MAX,	V_I = 2.7 V			40			40	μA
		Others					20			20	
I_{IL}	Low-level input current		V_{CC} = MAX,	V_I = 0.4 V			−0.4			−0.4	mA
I_{OS}	Short-circuit output current§	SER/Q15	V_{CC} = MAX		−30		−130	−30		−130	mA
		Y0 thru Y15¶			−20		−100	−20		−100	
I_{CC}	Supply current	'LS673	V_{CC} = MAX			50	80		52	80	mA
		'LS674				25	40		25	40	

†For conditions shown as MIN or MAX use the appropriate value specified under recommended operating conditions.
‡All typical values are at V_{CC} = 5 V, T_A = 25°C.
§Not more than one output should be shorted at a time, and duration of the short circuit should not exceed one second.
¶'LS673 only.

switching characteristics, V_{CC} = 5 V, T_A = 25°C, see note 2

PARAMETER	'LS673		'LS674		TEST CONDITIONS	MIN	TYP	MAX	UNIT
	FROM	TO	FROM	TO					
f_{max}	SH CLK	SER/Q15	CLK	SER/Q15	R_L = 667 Ω, C_L = 45 pF	20	28		MHz
t_{PHL}	STRCLR	Y0 thru Y15			R_L = 2 kΩ, C_L = 15 pF		25	40	ns
t_{PLH}	MODE/ STRCLK	Y0 thru Y15					28	45	
t_{PHL}							30	45	
t_{PLH}	SH CLK	SER/Q15	CLK	SER/Q15	R_L = 667 Ω, C_L = 45 pF		21	33	ns
t_{PHL}							26	40	
t_{PZH}	$\overline{CS}$, R/$\overline{W}$	SER/Q15	$\overline{CS}$, R/$\overline{W}$	SER/Q15	R_L = 667 Ω, C_L = 45 pF		30	45	ns
t_{PZL}							30	45	
t_{PHZ}	$\overline{CS}$, R/$\overline{W}$	SER/Q15	$\overline{CS}$, R/$\overline{W}$	SER/Q15	R_L = 667 Ω, C_L = 5 pF		25	40	ns
t_{PLZ}							25	40	

NOTE 2: Load circuits and voltage waveforms are shown in Section 1.

TEXAS INSTRUMENTS
POST OFFICE BOX 655012 • DALLAS, TEXAS 75265

D2422, JANUARY 1981 – REVISED MARCH 1988

- **Full 4-Bit Binary Accumulator in a Single 20-Pin Package**
- **Contains Two Synchronous Registers:**
  Word A
  Word B Shift/Accumulator
- **16 Arithmetic Operations Including B Minus A and A Minus B**
- **16 Logic-Mode Operations**
- **Expandable to Handle N-Bit Words with Full Carry Look-Ahead**
- **Bus Driving I/O Ports**

SN54LS681 . . . J OR W PACKAGE
SN74LS681 . . . DW OR N PACKAGE
(TOP VIEW)

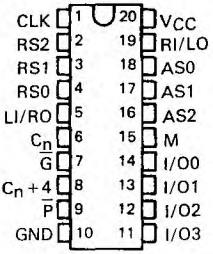

SN54LS681 . . . FK PACKAGE
(TOP VIEW)

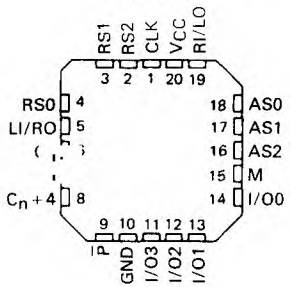

description

These low-power Schottky IC's integrate a high-speed arithmetic logic unit (ALU) complete with word A and word B registers on a single chip. The ALU performs 16 arithmetic and 16 logic functions (see Tables 1 and 2). Full carry look-ahead is provided for fast carry of four-bit words. The carry input (C_n) and propagate and generate outputs ($\overline{P}$ and $\overline{G}$) are provided for direct use with SN54S182/SN74S182 carry look-ahead generators for optimum performance with longer words.

The A and B registers are controlled by three inputs (RSO, RS1, and RS2). These pins define eight distinct register modes (see Table 3). The A register is a simple storage register while the B register is a combination storage/shift/accumulator register. The contents of the A and B registers provide the A and B words for the ALU.

Four I/O ports (I/O 0 thru I/O 3) are provided for parallel loading of word A and/or word B into their respective registers. These same ports also serve as bus driving outputs for the ALU/accumulator results (Fj). Two additional I/O ports (RI/LO and LI/RO) are provided to allow expansion of the accumulator for words greater than four bits in length.

The A or B register can be parallel loaded from the four I/O ports. The B register can also be parallel loaded from the ALU as an accumulator register and in addition, the B register can be serially loaded from either the RI/LO or the LI/RO ports.

The SN54LS681 is characterized for operation over the full military temperature range from −55°C to 125°C. The SN74LS681 is characterized for operation from 0°C to 70°C.

PRODUCTION DATA documents contain information current as of publication date. Products conform to specifications per the terms of Texas Instruments standard warranty. Production processing does not necessarily include testing of all parameters.

functional block diagram (positive logic)

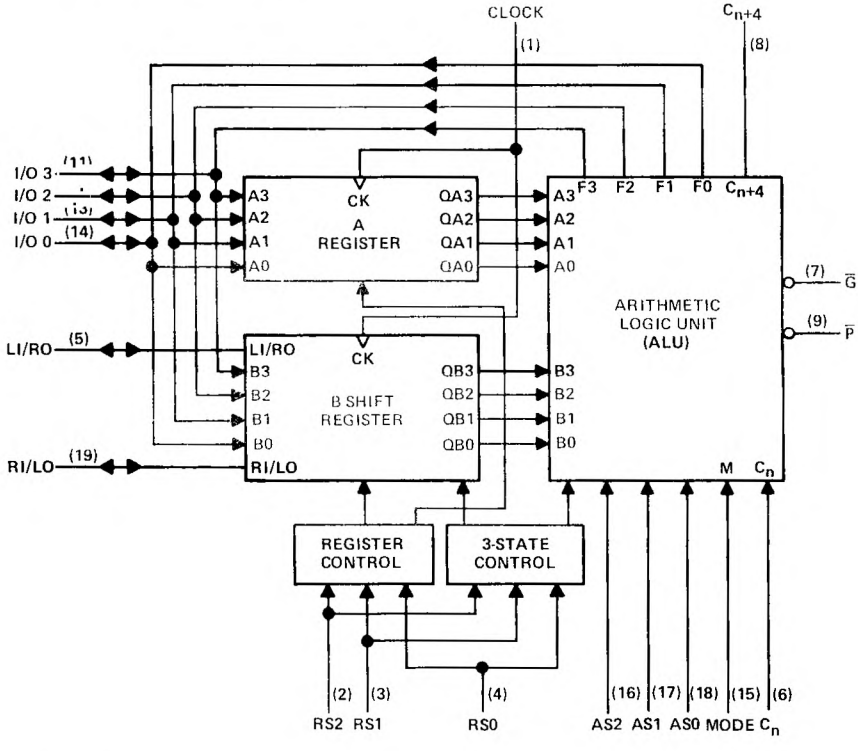

schematics of inputs and outputs

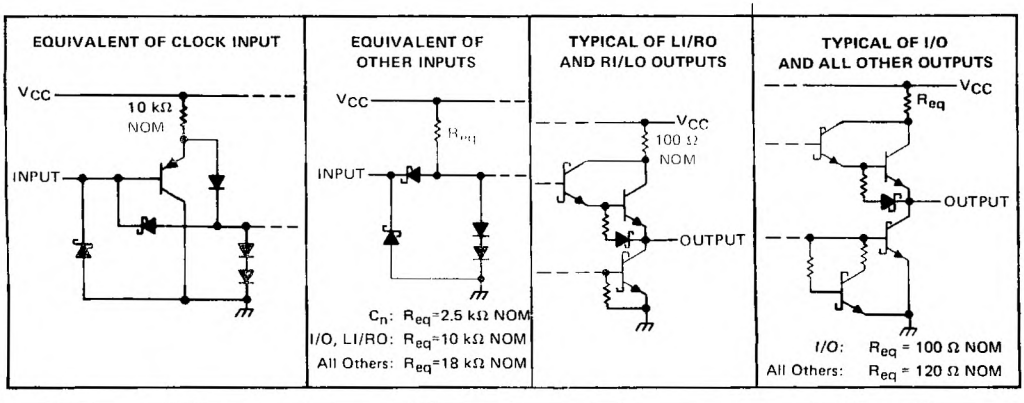

TEXAS INSTRUMENTS
POST OFFICE BOX 655012 • DALLAS, TEXAS 75265

FUNCTION TABLES

TABLE 1 – ARITHMETIC FUNCTIONS

Mode Control (M) = Low

ALU SELECTION			ACTIVE-HIGH DATA	
AS2	AS1	AS0	C_n = H (with carry)	C_n = L (no carry)
L	L	L	$F_j = L$	$F_j = H$
L	L	H	F = B MINUS A	F = B MINUS A MINUS 1
L	H	L	F = A MINUS B	F = A MINUS B MINUS 1
L	H	H	F = A PLUS B PLUS 1	F = A PLUS B
H	L	L	F = B PLUS 1	$F_j = B_j$
H	L	H	F = $\overline{B}$ PLUS 1	$F_j = \overline{B}_j$
H	H	L	F = A PLUS 1	$F_j = A_j$
H	H	H	F = $\overline{A}$ PLUS 1	$F_j = \overline{A}_j$

TABLE 2 – LOGIC FUNCTIONS

Mode Control (M) = High

ALU SELECTION			ACTIVE-HIGH DATA	
AS2	AS1	AS0	C_n = H (with carry)	C_n = L (no carry)
L	L	L	$F_0 = H, F_1 = F_2 = F_3 = L$	$F_j = L$
L	L	H	$F_j = A_j \oplus B_j$ PLUS 1	$F_j = A_j \oplus B_j$
L	H	L	$F_j = \overline{A_j \oplus B_j}$ PLUS 1	$F_j = \overline{A_j \oplus B_j}$
L	H	H	$F_j = L$	$F_j = H$
H	L	L	$F_j = A_j B_j$ PLUS 1	$F_j = A_j B_j$
H	L	H	$F_j = \overline{A_j + B_j}$ PLUS 1	$F_j = \overline{A_j + B_j}$
H	H	L	$F_j = \overline{A_j B_j}$ PLUS 1	$F_j = \overline{A_j B_j}$
H	H	H	$F_j = A_j + B_j$ PLUS 1	$F_j = A_j + B_j$

TABLE 3 – REGISTER

FUNCTION	BEFORE L TO H CLOCK TRANSITION												OUTPUTS AFTER L TO H CLOCK TRANSITION									
	R SELECTION		DATA INPUTS						A REGISTER				B SHIFT REGISTER						ALU			
	RS1	RS0	LI/RO	I/O 3	I/O 2	I/O 1	I/O 0	RI/LO	QA3	QA2	QA1	QA0	LI/RO	QB3	QB2	QB1	QB0	RI/LO	F3	F2	F1	F0
	L	L	Z	F3	F2	F1	F0	Z	$QA3_0$	$QA2_0$	$QA1_0$		Z	$F3_n$	$F2_n$	$F1_n$	$F0_n$	Z	F3	F2	F1	F0
	L	H	Z	b3	b2	b1	b0	Z	$QA3_0$	$QA2_0$	$QA1_0$	$QA0_0$	Z	b3	b2	b1	b0	Z	Z	Z	Z	Z
SHIFT LOGICAL	L	H	li	F3	F2	F1	F0	QB0	$QA3_0$	$QA2_0$	$QA1_0$	$QA0_0$	li	li	$QB3_n$	$QB2_n$	$QB1_n$	$QB1_n$	F3	F2	F1	F0
LEFT SHIFT ARITH	L	H	li	F3	F2	F1	F0	QB0	$QA3_0$	$QA2_0$	$QA1_0$	$QA0_0$	li	$QB3_n$	li	$QB2_n$	$QB1_n$	$QB1_n$	F3	F2	F1	F0
RIGHT SHIFT LOGICAL	H	L	QB3	F3	F2	F1	F0	ri	$QA3_0$	$QA2_0$	$QA1_0$	$QA0_0$	$QB2_n$	$QB2_n$	$QB1_n$	$QB0_n$	ri	ri	F3	F2	F1	F0
RIGHT SHIFT	H	L	QB2	F3	F2	F1	F0	ri	$QA3_0$	$QA2_0$	$QA1_0$	$QA0_0$	$QB1_n$	$QB3_n$	$QB1_n$	$QB0_n$	ri	ri	F3	F2	F1	F0
	H	H	L	Z	F3	F2	F1	F0	Z	$QA3_0$	$QA2_0$		Z			$QB1_0$		Z	$F3_0$	$F2_0$	$F1_0$	$F0_0$
	H	H	H	Z	a3	a2	a1	a0	Z	a3	a2		Z			$QB1_0$		Z	Z	Z	Z	Z

H = high level (steady state)
L = low level (steady state)
Z = high impedance (output off)
a0 . . . a3, b0 . . . b3 = the level of steady - state condition at I/O 0 thru I/O 3, respectively and intended as A or B input data
F0 . . . F3 = internal ALU results
$QA0_0 \ldots QB0_0$, $F0_0 \ldots F3_0$ = the level of QA0 thru QB3 and F0 thru F3, respectively, before the indicated steady-state input conditions were established
$QA0_n \ldots QB3_n$ = the level of QA0 thru QB3 before the most recent ↑ transition of the clock
ri, li = the level of steady-state conditions at RI/LO or LI/RO, respectively

logic symbol†

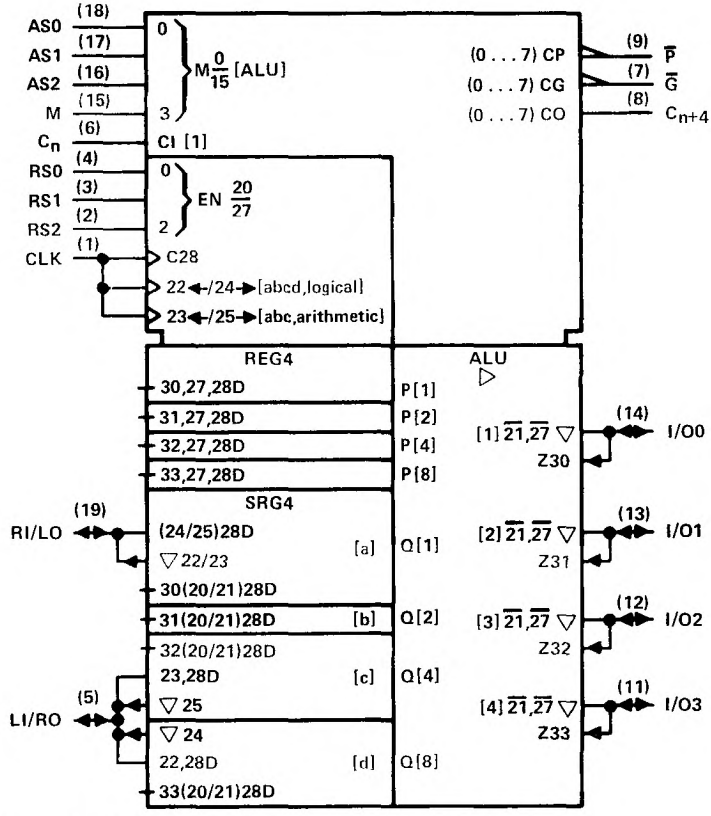

†This symbol is in accordance with ANSI/IEEE Std. 91-1984 and IEC Publication 617-12.

absolute maximum ratings over operating free-air temperature range (unless otherwise noted)

Supply voltage, V_{CC} (see Note 1)		7 V
Input voltage		7 V
Operating free-air temperature range:	SN54LS681	−55°C to 125°C
	SN74LS681	0°C to 70°C
Storage temperature range		−65°C to 150°C

NOTE 1: Voltage values are with respect to the network ground terminal.

TEXAS INSTRUMENTS
POST OFFICE BOX 655012 • DALLAS, TEXAS 75265

recommended operating conditions

		SN54LS681			SN74LS681			UNIT
		MIN	NOM	MAX	MIN	NOM	MAX	
Supply voltage, V_{CC}		4.5	5	5.5	4.75	5	5.25	V
High-level output current, I_{OH}	LI/RO, I/O, RI/LO			−1			−2.6	mA
	$\overline{P}$, $\overline{G}$, C_{n+4}			− 0.4			− 0.4	mA
Low-level output current, I_{OL}	I/O			12			24	mA
	C_{n+4}, LI/RO, RI/LO			4			8	
	$\overline{P}$			8			8	
	$\overline{G}$			16			16	
Clock frequency, f_{clock}		0		20	0		20	MHz
Width of clock pulse, $t_{w(clock)}$		25			25			ns
Setup time, t_{su}	RS0-RS2 to CLK↑	35			30			ns
	Data I/O to CLK↑	25			25			
Hold time, t_h		0			0			ns
Operating free-air temperature, T_A		−55		125	0		70	°C

electrical characteristics over recommended operating free-air temperature range (unless otherwise noted)

PARAMETER			TEST CONDITIONS†		SN54LS681			SN74LS681			UNIT
					MIN	TYP‡	MAX	MIN	TYP‡	MAX	
V_{IH}	High-level input voltage				2			2			V
V_{IL}	Low-level input voltage	C_n					0.7			0.7	V
		All others					0.7			0.8	
V_{IK}	Input clamp voltage		V_{CC}=MIN, I_I=−18 mA				−1.5			−1.5	V
V_{OH}	High-level output voltage	All I/O	V_{CC}=MIN, V_{IH}=2 V, V_{IL}=V_{IL} max, I_{OH}=MAX		2.4	3.1		2.4	3.2		V
		$\overline{P}$, $\overline{G}$, C_{n+4}			2.5	3.4		2.7	3.4		
V_{OL}	Low-level output voltage	I/O	V_{CC}=MAX, V_{IH}=2 V, V_{IL}=V_{IL} max	I_{OL}=12 mA		0.25	0.4		0.25	0.4	V
				I_{OL}=24 mA					0.35	0.5	
		LI/RO, RI/LO, C_{n+4}		I_{OL}=4 mA		0.25	0.4		0.25	0.4	
				I_{OL}=8 mA					0.35	0.5	
		$\overline{P}$		I_{OL}=8 mA		0.35	0.5		0.35	0.5	
		$\overline{G}$		I_{OL}=16 mA		0.35	0.5		0.35	0.5	
I_{OZH}	Off-state output current, high-level voltage applied	I/O, LI/RO, RI/LO	V_{CC}=MAX, V_{IH}=2 V, V_{IL}=V_{IL} max, V_O=2.7 V				40			40	μA
I_{OZL}	Off-state output current, low-level voltage applied	I/O, LI/RO	V_{CC}=MAX, V_{IH}=2 V, V_{IL}=V_{IL} max, V_O=0.4 V				− 0.8			− 0.8	mA
		RI/LO					− 0.4			− 0.4	
I_I	Input current at maximim input voltage	All I/O	V_{CC}=MAX	V_I=5.5 V			0.1			0.1	mA
		C_n		V_I=7 V			0.5			0.5	
		All others					0.1			0.1	
I_{IH}	High-level input current	C_n	V_{CC}=MAX, V_I=2.7 V				100			100	μA
		All I/O					40			40	
		All others					20			20	
I_{IL}	Low-level input current	C_n	V_{CC}=MAX, V_I=0.4 V				−4			−4	mA
		I/O, LI/RO					−0.8			−0.8	
		CLK					−0.2			−0.2	
		All others					−0.4			−0.4	
I_{OS}	Short-circuit output current§	I/O	V_{CC}=MAX		−30			−30		−130	mA
		LI/RO, RI/LO, $\overline{P}$, $\overline{G}$, C_{n+4}			−20		−100	−20		−100	
I_{CC}	Supply current		V_{CC}=MAX, RS0 at 4.5 V, All other I/O at 0 V			100	150		100	150	mA

†For conditions shown as MIN or MAX, use the appropriate value specified under recommended operations.
‡All typical values are at V_{CC} = 5 V, T_A = 25°C.
§Not more than one output should be shorted at a time, and duration of the short-circuit should not exceed one second.

switching characteristics, V_{CC} = 5 V, T_A = 25°C, see note 2

PARAMETER	FROM (INPUT)	TO (OUTPUT)	TEST CONDITIONS		MIN	TYP	MAX	UNIT
t_{PLH}	CLOCK↑	$\overline{P}$	R_L = 667 Ω,	C_L = 45 pF		25	40	ns
t_{PHL}						30	45	
t_{PLH}		$\overline{G}$				26	40	ns
t_{PHL}						27	40	
t_{PLH}		I/O				27	40	ns
t_{PHL}						29	40	
t_{PLH}		C_n+4	R_L = 2 kΩ,	C_L = 15 pF		36	55	ns
t_{PHL}						34	50	
t_{PLH}		LI/R0				25	40	ns
t_{PHL}						23	35	
t_{PLH}		RI/L0				19	30	ns
t_{PHL}						17	30	
t_{PLH}	AS0-AS2	$\overline{P}$	R_L = 667 Ω,	C_L = 45 pF		30	45	ns
t_{PHL}						30	45	
t_{PLH}		$\overline{G}$				27	35	ns
t_{PHL}						28	35	
t_{PLH}		I/O				31	45	ns
t_{PHL}						29	45	
t_{PLH}		C_n+4	R_L = 2 kΩ,	C_L = 15 pF		39	55	ns
t_{PHL}						34	50	
t_{PLH}	C_n	$\overline{P}$	R_L = 667 Ω,	C_L = 45 pF		9	25	ns
t_{PHL}						9	20	
t_{PLH}		I/O				17	35	ns
t_{PHL}						13	20	
t_{PLH}		C_n+4	R_L = 2 kΩ,	C_L = 15 pF		20	30	ns
t_{PHL}						16	25	
t_{PLH}	MODE	$\overline{P}$	R_L = 667 Ω,	C_L = 45 pF		28	40	ns
t_{PHL}						29	40	
t_{PLH}		$\overline{G}$				21	30	ns
t_{PHL}						23	30	
t_{PLH}		I/O				30	45	ns
t_{PHL}						28	40	
t_{PLH}		C_n+4	R_L = 2 kΩ,	C_L = 15 pF		40	60	ns
t_{PHL}						37	50	
t_{PZH}	RS1-RS2	I/O	R_L = 667 Ω	C_L = 45 pF		28	45	ns
t_{PZL}						28	45	
t_{PHZ}				C_L = 5 pF		35	65	ns
t_{PLZ}						39	65	
t_{PZH}		LI/R0	R_L = 2 kΩ	C_L = 15 pF		25	40	ns
t_{PZL}						22	40	
t_{PHZ}				C_L = 5 pF		21	40	ns
t_{PLZ}						34	60	
t_{PZH}		RI/L0	R_L = 2 kΩ	C_L = 15 pF		22	40	ns
t_{PZL}						24	40	
t_{PHZ}				C_L = 5 pF		11	30	ns
t_{PLZ}						16	40	

NOTE 2: Load circuits and voltage waveforms are shown in Section 1.

TEXAS INSTRUMENTS
POST OFFICE BOX 655012 • DALLAS, TEXAS 75265

D2617, JANUARY 1981—REVISED MARCH 1988

- Compares Two 8-Bit Words
- Choice of Totem-Pole or Open-Collector Outputs
- Hysteresis at P and Q Inputs
- 'LS682 has 20-kΩ Pullup Resistors on the Q Inputs
- SN74LS686 and 'LS687 . . . JT and NT 24-Pin, 300-Mil Packages

TYPE	$\overline{P = Q}$	$\overline{P > Q}$	OUTPUT ENABLE	OUTPUT CONFIGURATION	20-kΩ PULLUP
'LS682	yes	yes	no	totem-pole	yes
'LS684	yes	yes	no	totem-pole	no
'LS685	yes	yes	no	open collector	no
SN74LS686	yes	yes	yes	totem pole	no
'LS687	yes	yes	yes	open collector	no
'LS688	yes	no	yes	totem pole	no

SN54LS687 . . . JT PACKAGE
SN74LS686, SN74LS687 . . . DW OR NT PACKAGE
(TOP VIEW)

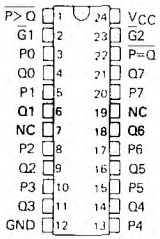

SN54LS687 . . . FK PACKAGE
(TOP VIEW)

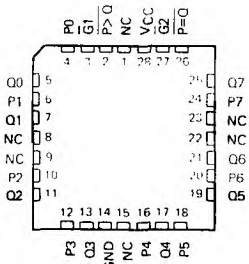

NC—No internal connection

SN54LS682, SN54LS684, SN54LS685 . . . J PACKAGE
SN74LS682, SN74LS684, SN74LS685 . . . DW OR N PACKAGE
(TOP VIEW)

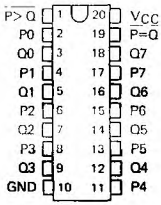

SN54LS682, SN54LS684, SN54LS685 . . . FK PACKAGE
(TOP VIEW)

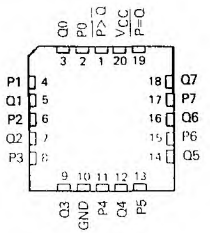

SN54LS688 . . . J PACKAGE
SN74LS688 . . . DW OR N PACKAGE
(TOP VIEW)

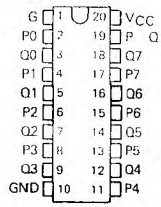

SN54LS688 . . . FK PACKAGE
(TOP VIEW)

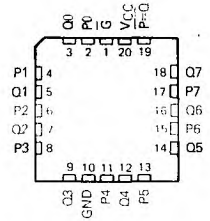

2 TTL Devices

PRODUCTION DATA documents contain information current as of publication date. Products conform to specifications per the terms of Texas Instruments standard warranty. Production processing does not necessarily include testing of all parameters.

description

These magnitude comparators perform comparisons of two eight-bit binary or BCD words. All types provide $\overline{P = Q}$ outputs and all except 'LS688 provide $\overline{P > Q}$ outputs as well. The 'LS682, 'LS684, 'LS686, and 'LS688 have totem-pole outputs, while the 'LS685 and 'LS687 have open-collector outputs. The 'LS682 features 20-kΩ pullup termination resistors on the Q inputs for analog or switch data.

FUNCTION TABLE

INPUTS			OUTPUTS	
DATA	ENABLES		$\overline{P=Q}$	$\overline{P>Q}$
P, Q	$\overline{G}$, $\overline{G1}$	$\overline{G2}$		
P=Q	L	X	L	H
P>Q	X	L	H	L
P<Q	X	X	H	H
P=Q	H	X	H	H
P>Q	X	H	H	H
X	H	H	H	H

NOTES: 1. The last three lines of the function table applies only to the devices having enable inputs, i.e., 'LS686 thru 'LS688.
2. The $\overline{P<Q}$ function can be generated by applying the $\overline{P=Q}$ and $\overline{P>Q}$ outputs to a 2-input NAND gate.
3. For 'LS686 and 'LS687, $\overline{G}1$ enables $\overline{P=Q}$ and $\overline{G}2$ enables $\overline{P>Q}$.

logic symbols†

'LS682, 'LS684

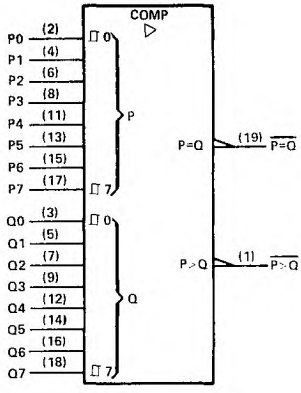

'LS685

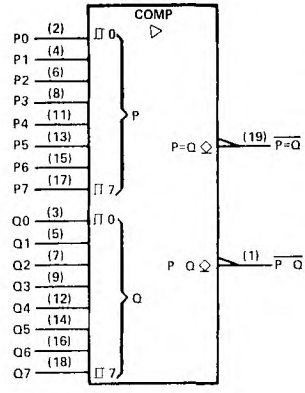

'LS686

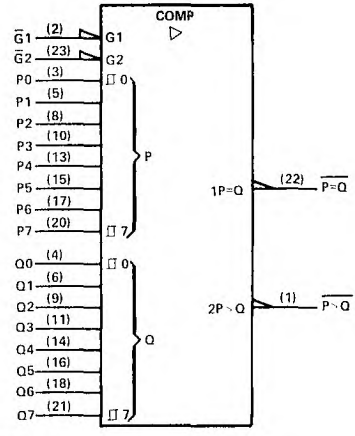

†These symbols are in accordance with ANSI/IEEE Std 91-1984 and IEC Publication 617-12.
Pin numbers shown are for DW, J, JT, N, and NT packages.

TEXAS INSTRUMENTS
POST OFFICE BOX 655012 • DALLAS, TEXAS 75265

logic symbols† (continued)

'LS687

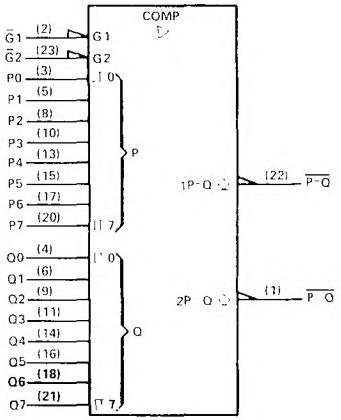

'LS688

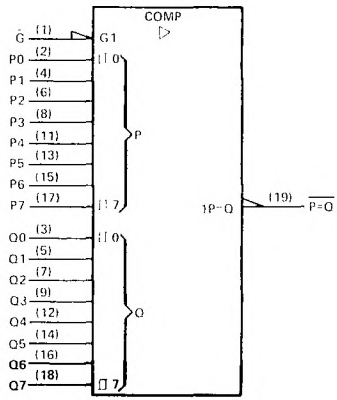

†These symbols are in accordance with ANSI/IEEE Std 91-1984 and IEC Publication 617-12.
Pin numbers shown are for DW, J, JT, N, and NT packages.

schematics of inputs and outputs

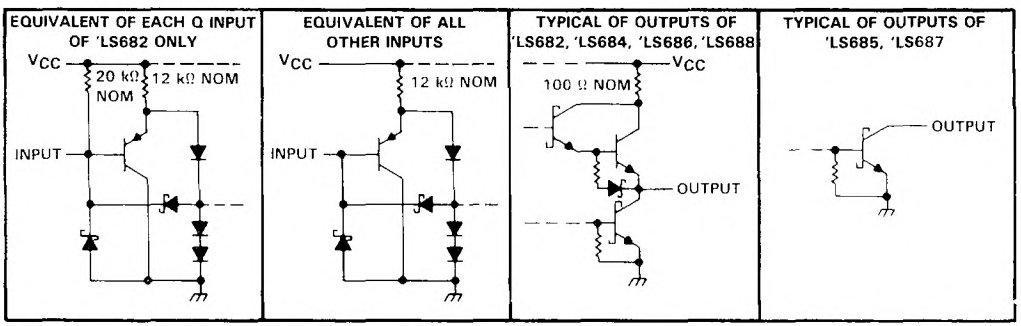

'LS682, 'LS684, 'LS685 logic diagram (positive logic)

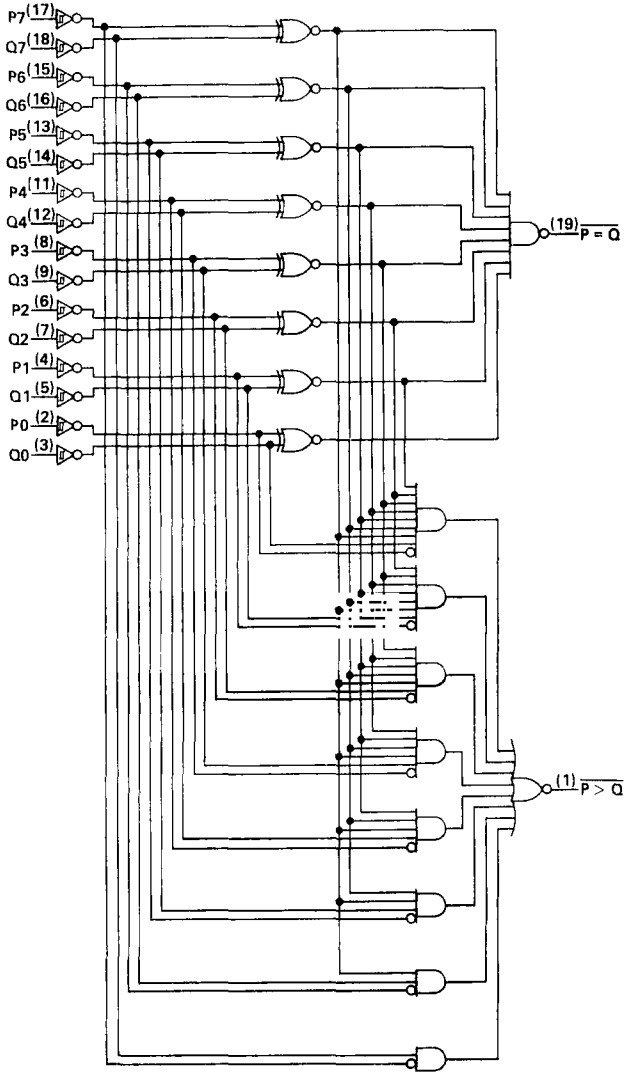

Pin numbers shown are for DW, J, and N packages.

TEXAS INSTRUMENTS
POST OFFICE BOX 655012 • DALLAS, TEXAS 75265

'LS686, 'LS687 logic diagram (positive logic)

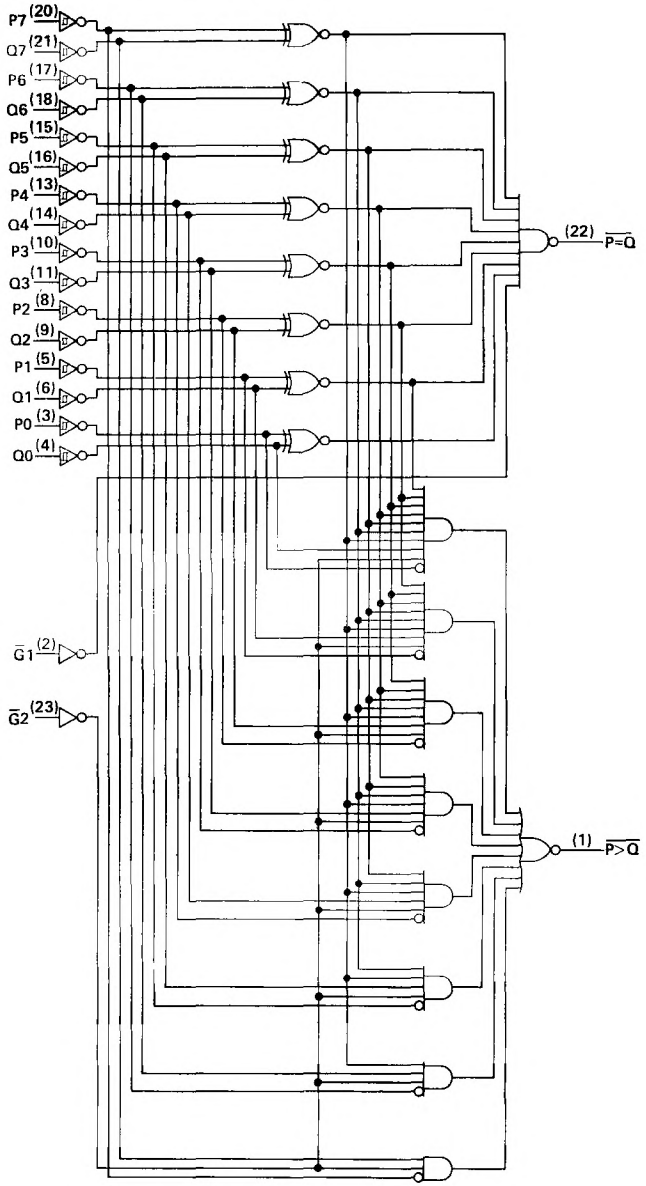

Pin numbers shown are for DW, JT, and NT packages.

'LS688 logic diagram (positive logic)

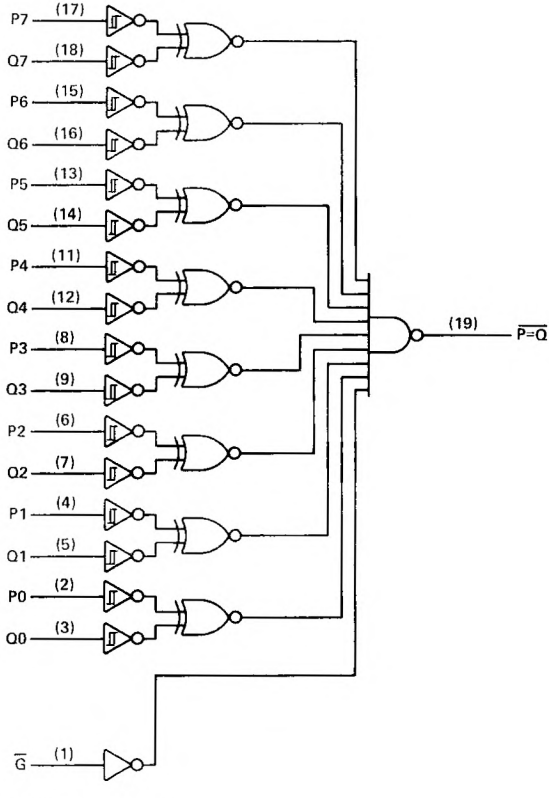

Pin numbers shown are for DW, J, and N packages.

absolute maximum ratings over operating free-air temperature range (unless otherwise noted)

Supply voltage, V_{CC} (see Note 1) . . . . . 7 V
Input voltage: Q inputs of 'LS682 . . . . . 5.5 V
All other inputs . . . . . 7 V
Off-state output voltage: 'LS685, 'LS687 . . . . . 7 V
Operating free-air temperature range:
SN54LS682, SN54LS684, SN54LS685, SN54LS687, SN54LS688 . . . . . −55°C to 125°C
SN74LS682, SN74LS684 thru SN74LS688 . . . . . 0°C to 70°C
Storage temperature range . . . . . −65°C to 150°C

NOTE 1: Voltage values are with respect to network ground terminal.

TEXAS INSTRUMENTS
POST OFFICE BOX 655012 • DALLAS, TEXAS 75265

recommended operating conditions

	SN54LS'			SN74LS'			UNIT
	MIN	NOM	MAX	MIN	NOM	MAX	
Supply voltage, V_{CC}	4.5	5	5.5	4.85	5	5.25	V
High-level output current, I_{OH}			−400			−400	μA
Low-level output current, I_{OL}			12			24	mA
Operating free-air temperature, T_A	−55		125	0		70	°C

electrical characteristics over recommended operating free-air temperature range (unless otherwise noted)

PARAMETER			TEST CONDITIONS†		SN54LS'			SN74LS'			UNIT
					MIN	TYP‡	MAX	MIN	TYP‡	MAX	
V_{IH}	High-level input voltage				2			2			V
V_{IL}	Low-level input voltage						0.7			0.8	V
$V_{T+} - V_{T-}$	Hysteresis	P or Q inputs	V_{CC} = MIN			0.4			0.4		V
V_{IK}	Input clamp voltage		V_{CC} = ⋮⋮⋮	I_I = −18 mA			−1.5			−1.5	V
V_{OH}	High-level output voltage		V_{CC} = ⋮⋮⋮, V_{IL} = V_{IL}max,	V_{IH} = 2 V, I_{OH} = −400 μA	2.5			2.7			V
V_{OL}	Low-level output voltage		V_{CC} = MIN, V_{IH} = 2 V, V_{IL} = V_{IL}max	I_{OL} = 12 mA		0.25	0.4		0.25	0.4	V
				I_{OL} = 24 mA					0.35	0.5	
I_I	Input current at maximum input voltage	Q inputs, 'LS682	V_{CC} = MAX,	V_I = 5.5 V			0.1			0.1	mA
		All other inputs	V_{CC} = MAX,	V_I = 7 V							
I_{IH}	High-level input current		V_{CC} = MAX,	V_I = 2.7 V			20			20	μA
I_{IL}	Low-level input current	Q inputs, 'LS682	V_{CC} = MAX,	V_I = 0.4 V			−0.4			−0.4	mA
		All other inputs					−0.2			−0.2	
I_{OS}§	Short-circuit output current		V_{CC} = MAX,	V_O = 0	−20		−100	−20		−100	mA
I_{CC}	Supply current	'LS682	V_{CC} = MAX,	See Note 1		42	70		42	70	mA
		' ⋮⋮ '				40	65		40	65	
		'				44	75		44	75	
		'L ⋮				40	65		40	65	

† For conditions shown as MIN or MAX, use the appropriate values specified under recommended operating conditions.
‡ All typical values are at V_{CC} = 5 V, T_A = 25°C.
§ Not more than one output should be shorted at a time, and duration of the short-circuit should not exceed one second.
NOTE 1: I_{CC} is measured with any $\overline{G}$ inputs grounded, all other inputs at 4.5 V, and all outputs open.

switching characteristics, V_{CC} = 5 V, T_A = 25°C

PARAMETER†	FROM (INPUTS)	TO (OUTPUT)	TEST CONDITIONS	'LS682		'LS684		'LS686		'LS688		UNIT
				MIN	MAX	MIN	MAX	MIN	MAX	TYP	MAX	
t_{PLH}	P	$\overline{P=Q}$	R_L = 667 Ω, C_L = 45 pF, All other inputs low, See Note 2	13	25	15	25	13	25	12	18	ns
t_{PHL}				15	25	17	25	20	30	17	23	
t_{PLH}	Q	$\overline{P=Q}$		14		16	25	13		12	18	ns
t_{PHL}				15		15	25	21		17	23	
t_{PLH}	$\overline{G}$, $\overline{G}1$	$\overline{P=Q}$						11	20	12	18	ns
t_{PHL}								19		13	20	
t_{PLH}	P	$\overline{P>Q}$		20	30	22	30	19	30			ns
t_{PHL}				15	30	17	30	15	30			
t_{PLH}	Q	$\overline{P>Q}$		21		24	30	18	30			ns
t_{PHL}				19		20	30	19	30			
t_{PLH}	$\overline{G}2$	$\overline{P>Q}$						21	30			ns
t_{PHL}								16	25			

†t_{PLH} ≡ propagation delay time, low-to-high-level outputs; t_{PHL} ≡ propagation delay time, high-to-low-level output.
NOTE 2: Load circuits and voltage waveforms are shown in Section 1.

TEXAS INSTRUMENTS
POST OFFICE BOX 655012 • DALLAS, TEXAS 75265

recommended operating conditions

	SN54LS'			SN74LS'			UNIT
	MIN	NOM	MAX	MIN	NOM	MAX	
Supply voltage, V_{CC}	4.5	5	5.5	4.85	5	5.25	V
High-level output current, V_{OH}			5.5			5.5	V
Low-level output current, I_{OL}			12			24	mA
Operating free-air temperature, T_A	−55		125	0		70	°C

electrical characteristics over recommended operating free-air temperature range (unless otherwise noted)

PARAMETER			TEST CONDITIONS†		SN54LS'			SN74LS'			UNIT
					MIN	TYP	MAX	MIN	TYP	MAX	
V_{IH}	High-level input voltage				2			2			V
V_{IL}	Low-level input voltage						0.7			0.8	V
$V_{T+} - V_{T-}$	Hysteresis	P or Q inputs	V_{CC} = MIN			0.4			0.4		V
V_{IK}	Input clamp voltage		V_{CC} = MIN,	I_I = −18 mA			−1.5			−1.5	V
I_{OH}	High-level output voltage		V_{CC} = MIN, V_{IL} = V_{IL}max,	V_{IH} = 2 V, V_{OH} = 5.5 V			250			100	μA
V_{OL}	Low-level output voltage		V_{CC} = MIN, V_{IH} = 2 V, V_{IL} = V_{IL}max	I_{OL} = 12 mA		0.25	0.4		0.25	0.4	V
				I_{OL} = 24 mA					0.35	0.5	
I_I			V_{CC} = MAX,	V_I = 7 V			0.1			0.1	mA
I_{IH}	High-level input current		V_{CC} = MAX,	V_I = 2.7 V			20			20	μA
I_{IL}	Low-level input current		V_{CC} = MAX,	V_I = 0.4 V			−0.2			−0.2	mA
I_{CC}	Supply current		V_{CC} = MAX,	See Note 1		40	65		40	65	mA
						44	75		44	75	

†For conditions shown as MIN or MAX, use the appropriate values specified under recommended operating conditions.
‡All typical values are at V_{CC} = 5 V, T_A = 25°C.
NOTE 1: I_{CC} is measure with any $\overline{G}$ inputs grounded, all other inputs at 4.5 V, and all outputs open.

switching characteristics, V_{CC} = 5 V, T_A = 25°C

PARAMETER	FROM (INPUT)	TO (OUTPUT)	TEST CONDITIONS	'LS685			'LS687			UNIT
				MIN	TYP	MAX	MIN	TYP	MAX	
t_{PLH}	P	$\overline{P=Q}$	R_L = 667 Ω, C_L = 45 pF, All other inputs low, See Note 2		30	45		24	35	ns
t_{PHL}					19	35		20	30	
t_{PLH}	Q	$\overline{P=Q}$			24	45		24	35	ns
t_{PHL}					23	35		20	30	
t_{PLH}	$\overline{G}$, $\overline{G}1$	$\overline{P=Q}$						21	35	ns
t_{PHL}								18	30	
t_{PLH}	P	$\overline{P>Q}$			32	45		24	35	ns
t_{PHL}					16	35		16	30	
t_{PLH}	Q	$\overline{P>Q}$			30	45		24	35	ns
t_{PHL}					20	35		16	30	
t_{PLH}	$\overline{G}2$	$\overline{P>Q}$						24	35	ns
t_{PHL}								15	30	

† t_{PLH} = propagation delay time, low-to-high-level outputs; t_{PHL} = propagation delay time, high-to-low-level output.
NOTE 2: Load circuits and voltage waveforms are shown in Section 1.

TEXAS INSTRUMENTS
POST OFFICE BOX 655012 • DALLAS, TEXAS 75265

SN54LS690, SN54LS691, SN54LS693, SN74LS690, SN74LS691, SN74LS693
SYNCHRONOUS COUNTERS WITH OUTPUT REGISTERS AND MULTIPLEXED 3-STATE OUTPUTS

D2423, JANUARY 1981—REVISED MARCH 1988

- 4-Bit Counters/Registers
- Multiplexed Outputs for Counter or Latched Data
- 3-State Outputs Drive Bus Lines Directly
- 'LS690 . . .Decade Counter, Direct Clear
  'LS691 . . . Binary Counter, Direct Clear
  'LS693 . . . Binary Counter, Synchronous Clear

SN54LS690, SN54LS691, SN54LS693 . . . J PACKAGE
SN74LS690, SN74LS691, SN74LS693 . . . DW OR N PACKAGE
(TOP VIEW)

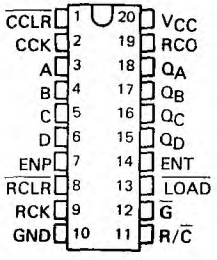

SN54LS690, SN54LS691, SN54LS693 . . . FK PACKAGE
(TOP VIEW)

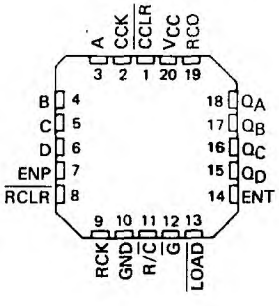

description

These low-power Schottky LSI devices incorporate synchronous counters, four-bit D-type registers, and quadruple two-line to one-line multiplexers with three-state outputs in a single 20-pin package. The counters can be programmed from the data inputs and have enable P inputs and enable T inputs and a ripple-carry output for easy expansion. The register/counter select input, R/$\overline{C}$, selects the counter when low or the register when high for the three-state outputs, Q_A, Q_B, Q_C, and Q_D. These outputs are rated at 12 and 24 milliamperes (54LS/74LS) for good bus-driving performance.

Individual clock and clear inputs are provided for both the counter and the register. Both clock inputs are positive-edge triggered: The clear line is active low and is asynchronous on the 'LS690 and 'LS691, synchronous on the 'LS693. Loading of the counter is accomplished when $\overline{LOAD}$ is taken low and a positive-transition occurs on the counter clock CCK.

Expansion is easily accomplished by connecting RCO of the first stage to ENT of the second state, etc. All ENP inputs can be tied common and used as master enable or disable control

schematics of inputs and outputs

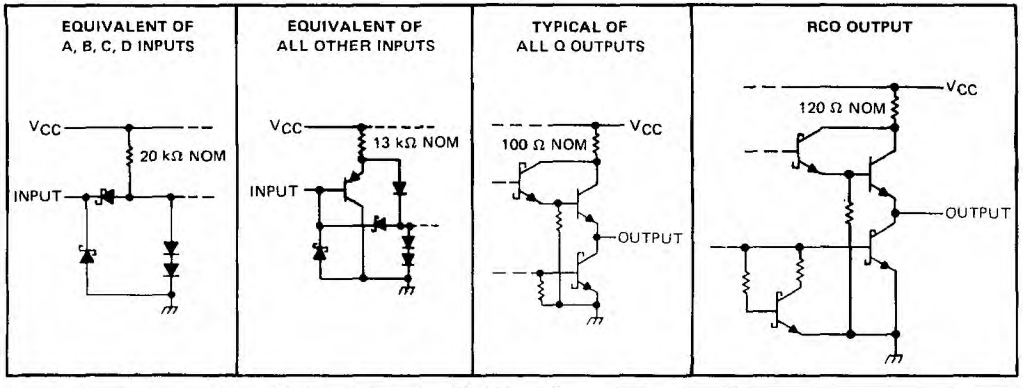

PRODUCTION DATA documents contain information current as of publication date. Products conform to specifications per the terms of Texas Instruments standard warranty. Production processing does not necessarily include testing of all parameters.

logic diagrams (positive logic)

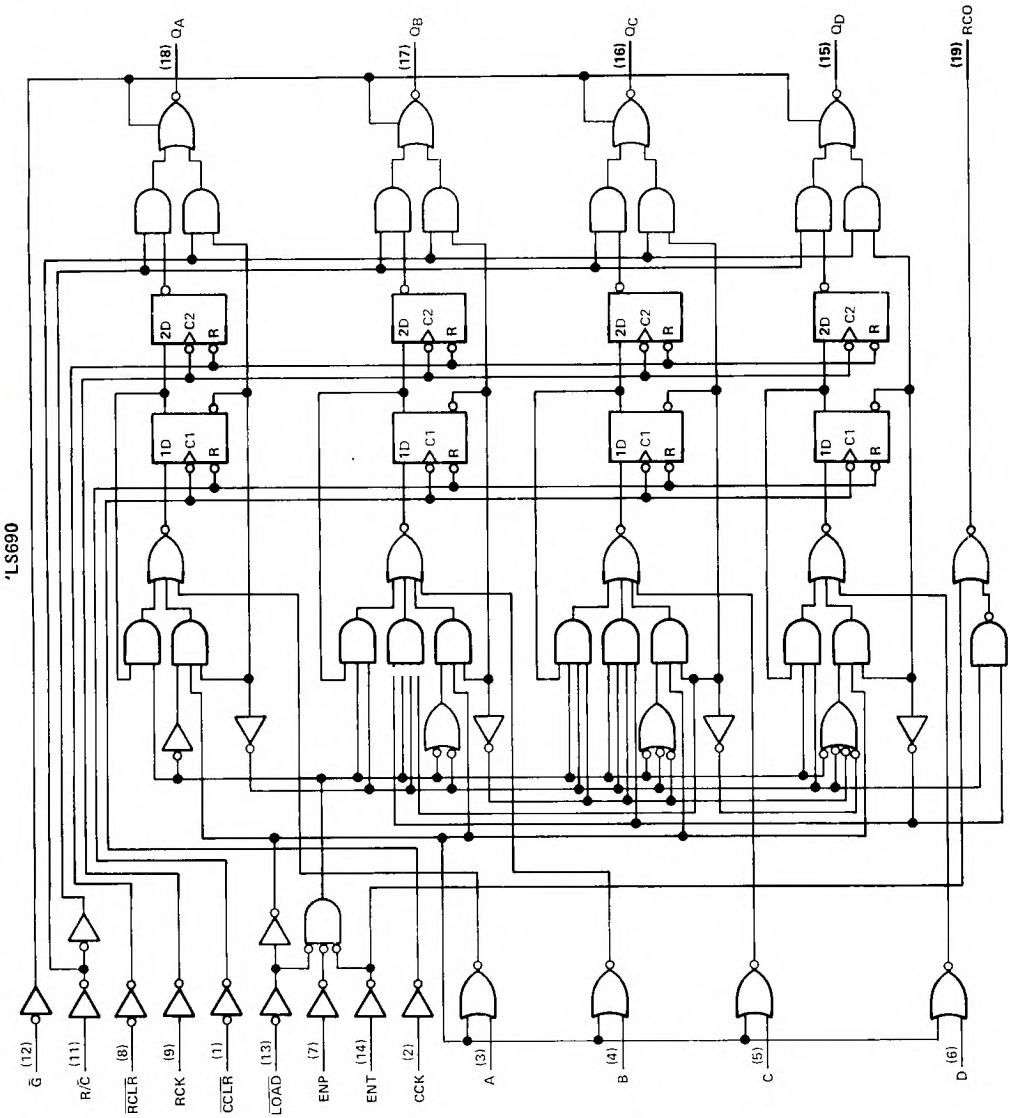

TEXAS INSTRUMENTS
POST OFFICE BOX 655012 • DALLAS, TEXAS 75265

logic diagrams (positive logic) (continued)

'LS691

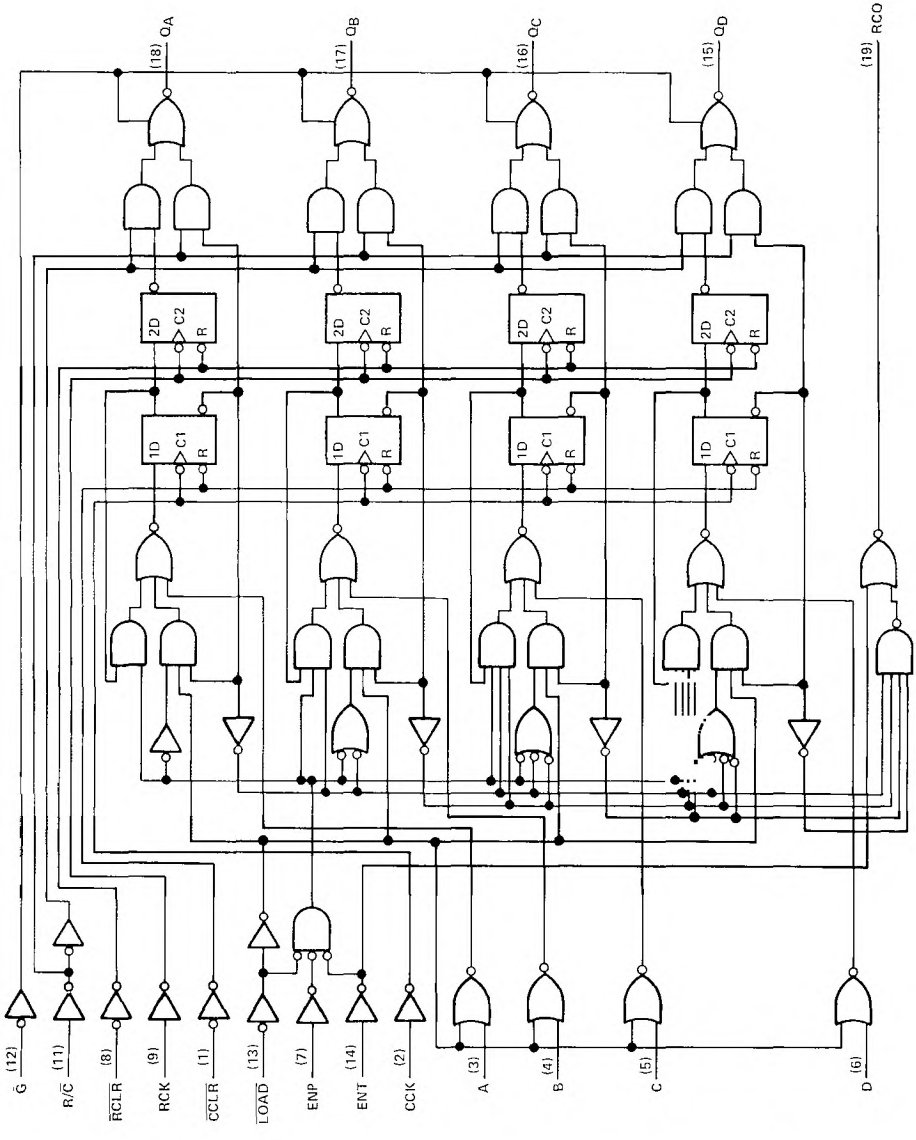

logic diagrams (positive logic) (continued)

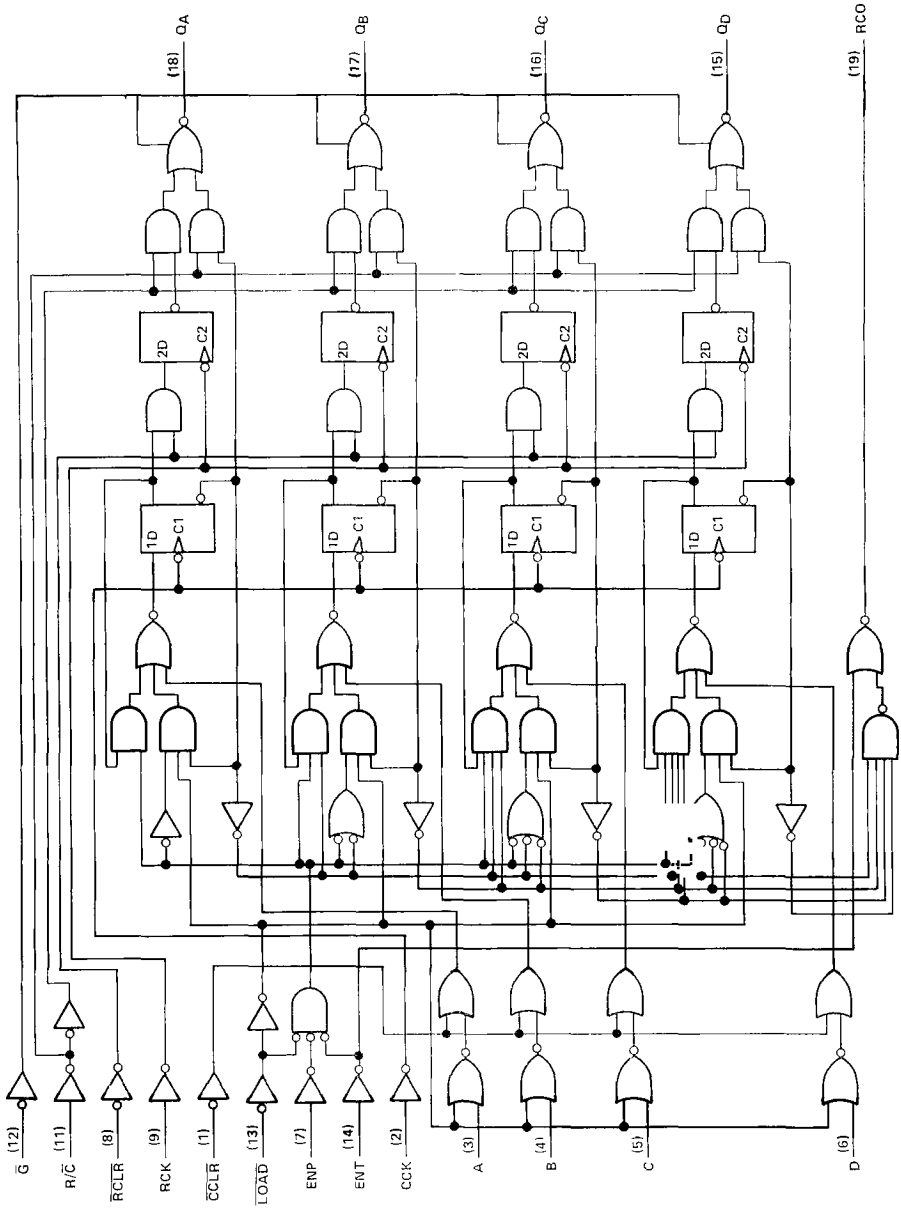

TEXAS INSTRUMENTS
POST OFFICE BOX 655012 • DALLAS, TEXAS 75265

logic symbols†

'LS690

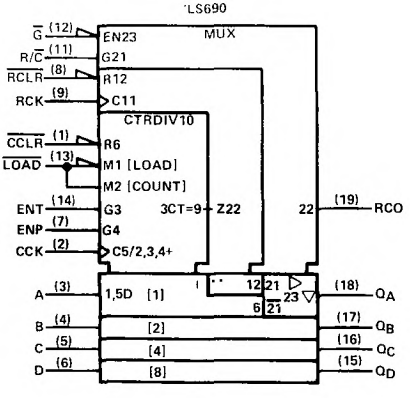

'LS691

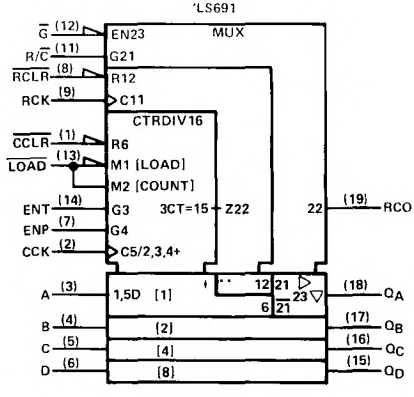

'LS693

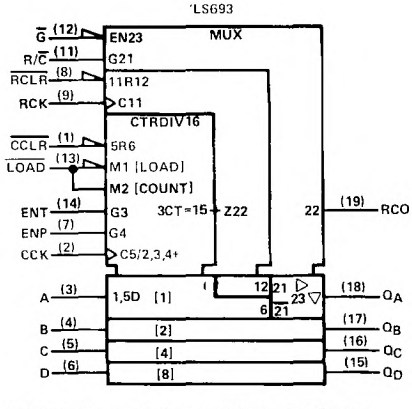

†These symbols are in accordance with ANSI/IEEE Std. 91-1984 and IEC Publication 617-12.

absolute maximum ratings over operating free-air temperature range (unless otherwise noted)

Supply voltage, V_{CC} (See Note 1) . . . . . 7 V
Input voltage . . . . . 7 V
Off-state output voltage . . . . . 5.5 V
Operating free-air temperature range: SN54LS690, SN54LS691, SN54LS693 . . . . . −55°C to 125°C
SN74LS690, SN74LS691, SN74LS693 . . . . . 0°C to 70°C
Storage temperature range . . . . . −65°C to 150°C

NOTE 1: Voltage values are with respect to network ground terminal.

recommended operating conditions

				'LS'			'LS'			UNIT
				MIN	NOM	MAX	MIN	NOM	MAX	
V_{CC}	Supply voltage			4.5	5	5.5	4.75	5	5.25	V
V_{IH}	High-level input voltage			2			2			V
V_{IL}	Low-level input voltage					0.7			0.8	V
I_{OH}	High-level output current		Q			−1			−2.6	mA
			RCO			−0.4			−0.4	mA
I_{OL}	Low-level output current		Q			12			24	mA
			RCO			4			8	mA
f_{clock}	Clock frequency			0		20	0		20	MHz
			RCK	0		20	0		20	MHz
t_w	Pulse duration		CCK high or low	25			25			ns
			RCK high or low	25			25			
		'LS690, 'LS691	$\overline{RCLR}$ low	20			20			
			$\overline{CCLR}$ low	20			20			
t_{su}	Setup time before CCK ↑		A thru D	30			30			ns
			ENP or ENT	30			30			
			$\overline{LOAD}$ ↓	30			30			
		'LS690, 'LS691	$\overline{S}$ ↓	40			40			
			$\overline{S}$ ↑ inactive	25			25			
t_{su}	Setup time before RCK ↑		CCK ↑ (See Note 2)	30			30			ns
		'LS690, 'LS691	$\overline{RCLR}$ ↑ inactive	25			25			
		'LS693	$\overline{RCLR}$ ↓	20			20			
t_h	Hold time	Any input from CCK ↑ or RCK ↑		0			0			ns
T_A	Operating free-air temperature			−55		125	0		70	°C

NOTE 2: This set up time ensures the register will see stable data from the counter outputs. The clocks may be tied together in which case the register state will be one clock pulse behind the counter.

TEXAS INSTRUMENTS
POST OFFICE BOX 655012 • DALLAS, TEXAS 75265

electrical characteristics over recommended operating free-air temperature range (unless otherwise noted)

PARAMETER		TEST CONDITIONS†		SN54LS'			SN74LS'			UNIT
				MIN	TYP‡	MAX	MIN	TYP‡	MAX	
V_{IK}		V_{CC} = MIN, I_I = – 18 mA				– 1.5			– 1.5	V
V_{OH}	Any Q	V_{CC} = MIN, V_{IH} = 2 V, V_{IL} = MAX	I_{OH} = – 1 mA	2.4	3.1					V
	Any Q		I_{OH} = – 2.6 mA				2.4	3.1		
	RCO		I_{OH} = – 0.4 mA	2.5	3.2		2.7	3.2		
V_{OL}	Any Q	V_{CC} = MIN, V_{IH} = 2 V, V_{IL} = MAX	I_{OL} = 12 mA		0.25	0.4		0.25	0.4	V
	Any Q		I_{OL} = 24 mA					0.35	0.5	
	RCO		I_{OL} = 4 mA		0.25	0.4		0.25	0.4	
	RCO		I_{OL} = 8 mA					0.35	0.5	
I_{OZH}	Any Q	V_{CC} = MAX, V_{IH} = 2 V, V_{IL} = MAX, V_O = 2.7 V				20			20	μA
I_{OZL}	Any Q	V_{CC} = MAX, V_{IH} = 2 V, V_{IL} = MAX, V_O = 0.4 V				– 20			– 20	μA
I_I		V_{CC} = MAX, V_I = 7 V				0.1			0.1	mA
I_{IH}		V_{CC} = MAX, V_I = 2.7 V				20			20	μA
I_{IL}	A thru D	V_{CC} = MAX, V_I = 0.4 V				– 0.4			– 0.4	mA
	All others					– 0.2			– 0.2	
I_{OS}§	Any Q	V_{CC} = MAX, V_O = 0 V		– 30		– 130	– 30		– 130	mA
	RCO			– 20		– 100	– 20		– 100	
I_{CCH}		V_{CC} = MAX, All outputs open	See Note 3		46	65		46	65	mA
I_{CCL}			See Note 4		48	70		48	70	
I_{CCZ}			See Note 5		48	70		48	70	

† For conditions shown as MIN or MAX, use the appropriate value specified under recommended operating conditions.
‡ All typical values are at V_{CC} = 5 V, T_A = 25°C.
§ Not more than one output should be shorted at a time and duration of short-circuit should not exceed one second.
NOTES: 3. I_{CCH} is measured after two 4.5 V to 0-V to 4.5-V pulses have been applied to CCK and RCK while $\overline{G}$ is grounded and all other inputs are at 4.5 V.
4. I_{CCL} is measured after two 0-V to 4.5-V to 0-V pulses have been applied to CCK and RCK while all other inputs are grounded.
5. I_{CCZ} is measured after two 0-V to 4.5-V to 0-V pulses have been applied to CCK and RCK while $\overline{G}$ is at 4.5 V and all other inputs are grounded.

switching characteristics, V_{CC} = 5 V, T_A = 25°C (see note 6)

PARAMETER	FROM (INPUT)	TO (OUTPUT)	TEST CONDITIONS	'LS690, 'LS691			'LS693			UNIT
				MIN	TYP	MAX	MIN	TYP	MAX	
t_{PLH}	CCK↑	RCO	R_L = 2 kΩ, C_L = 15 pF		23	40		23	40	ns
t_{PHL}					23	40		23	40	
t_{PLH}	ENT	RCO			13	20		13	20	ns
t_{PHL}					13	20		13	20	
t_{PLH}	CCK↑	Q	R_L = 667 Ω, C_L = 45 pF		12	20		12	20	ns
t_{PHL}					17	25		17	25	
t_{PLH}	RCK↑	Q			12	20		12	20	ns
t_{PHL}					17	25		17	25	
t_{PHL}	$\overline{CCT}$ R↓	Q			23	40				ns
t_{PHL}	[illegible] $\overline{S}$↓	Q			20	30				ns
t_{PLH}	R/$\overline{C}$	Q			16	25		16	25	ns
t_{PHL}					16	25		16	25	
t_{PZH}	$\overline{G}$↓	Q			19	30		19	30	ns
t_{PZL}					19	30		19	30	
t_{PHZ}	$\overline{G}$↑	Q	R_L = 667 Ω, C_L = 5 pF		17	30		17	30	ns
t_{PLZ}					17	30		17	30	

NOTE 6: Load circuits and voltage waveforms are shown in Section 1.

TEXAS INSTRUMENTS
POST OFFICE BOX 655012 • DALLAS, TEXAS 75265

typical operating sequences

'LS690 DECADE COUNTER, Asynchronous Clear

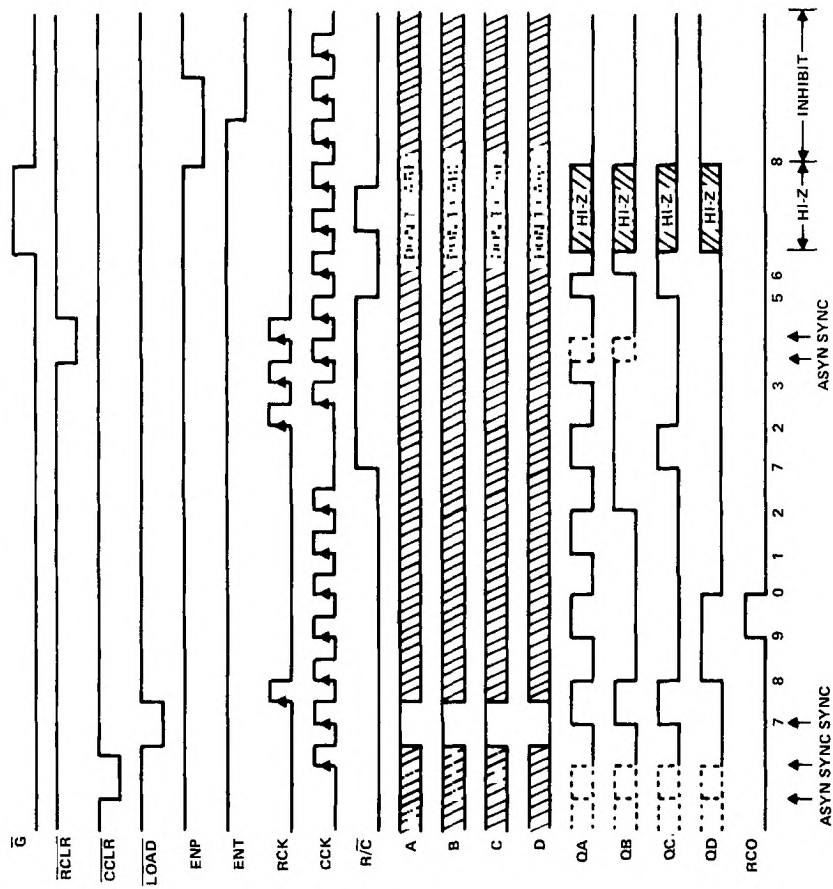

typical operating sequences (continued)

'LS691 BINARY COUNTER, Asynchronous Clear
'LS693 BINARY COUNTER, Synchronous Clear

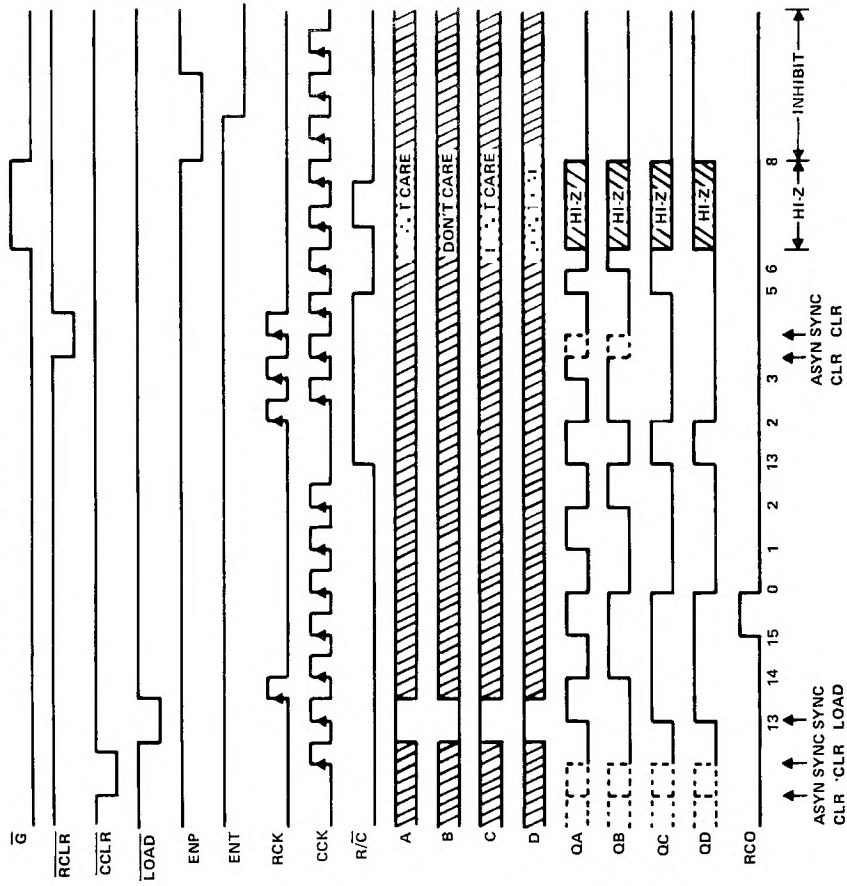

TEXAS INSTRUMENTS
POST OFFICE BOX 655012 • DALLAS, TEXAS 75265

SN54LS696, SN54LS697, SN54LS699, SN74LS696, SN74LS697, SN74LS699
SYNCHRONOUS UP/DOWN COUNTERS
WITH OUTPUT REGISTERS AND MULTIPLEXED 3-STATE OUTPUTS

D2424, JANUARY 1981—REVISED MARCH 1988

- **4-Bit Counters/Registers**
- **Multiplexed Outputs for Counter or Latched Data**
- **3-State Outputs Drive Bus Lines Directly**
- **'LS696 . . Decade Counter, Direct Clear**
  'LS697 . . Binary Counter, Direct Clear
  'LS699 . . Binary Counter, Synchronous Clear

SN54LS696, SN54LS697, SN54LS699 . . . J OR W PACKAGE
SN74LS696, SN74LS697, SN74LS699 . . . DW OR N PACKAGE
(TOP VIEW)

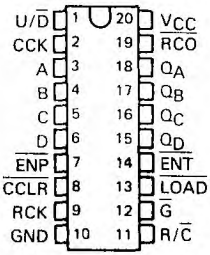

SN54LS696, SN54LS697, SN54LS699 . . . FK PACKAGE
(TOP VIEW)

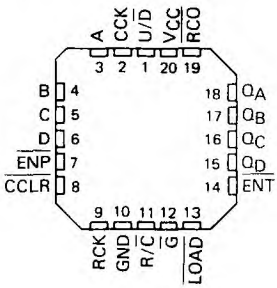

description

These low-power Schottky LSI devices incorporate synchronous up/down counters, four-bit D-type registers, and quadruple two-line to one-line multiplexers with three state outputs in a single 20-pin package. The up/down counters are programmable from the data inputs and feature enable $\overline{P}$ and enable $\overline{T}$ and a ripple-carry output for easy expansion. The register/counter select input R/$\overline{C}$, selects the counter when low and the register when high for the three-state outputs, Q_A, Q_B, Q_C, and Q_D. These outputs are rated at 12 and 24 milliamperes (54LS/74LS) for good bus driving performance.

Both the counter CCK and register clock RCK are positive-edge triggered. The counter clear $\overline{CCLR}$ is active low and is asynchronous on the 'LS696 and 'LS697, synchronous on the '. · ·· Loading of the counter is accomplished when · ∴ s taken low and a positive transition occurs on the counter clock CCK.

Expansion is easily nplished by connecting $\overline{RCO}$ of the first stage to · ·. of the second stage, etc. All $\overline{ENP}$ inputs can be tied common and used as a master enable or disable control.

schematics of inputs and outputs

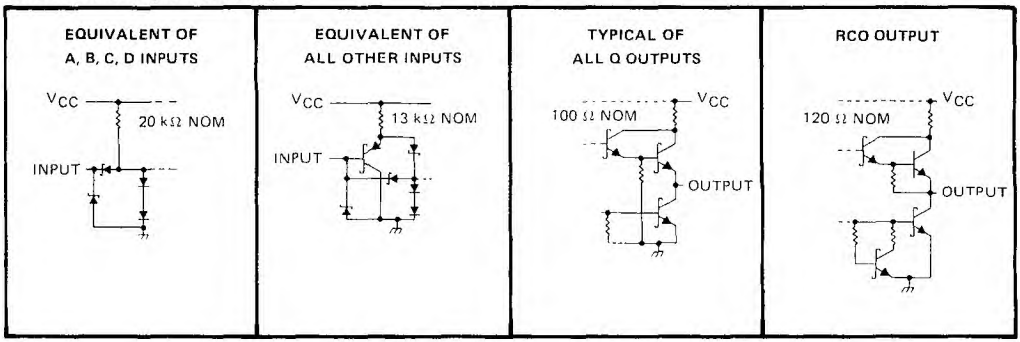

PRODUCTION DATA documents contain information current as of publication date. Products conform to specifications per the terms of Texas Instruments standard warranty. Production processing does not necessarily include testing of all parameters.

logic symbols†

'LS696

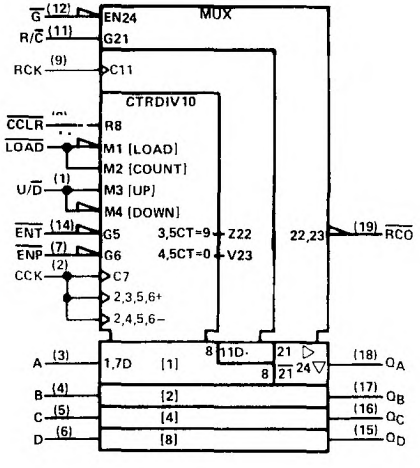

'LS697

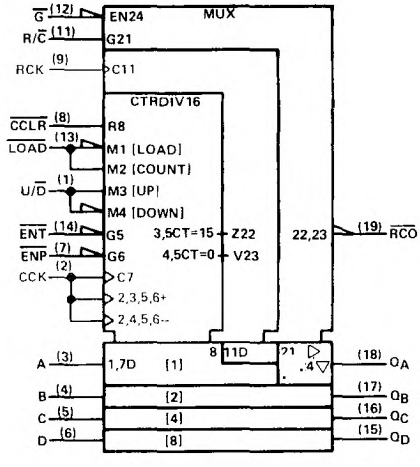

'LS699

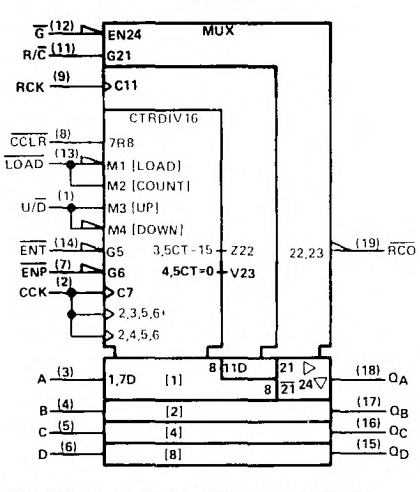

†These symbols are in accordance with ANSI/IEEE Std. 91-1984 and IEC Publication 617-12.

logic diagrams (positive logic)

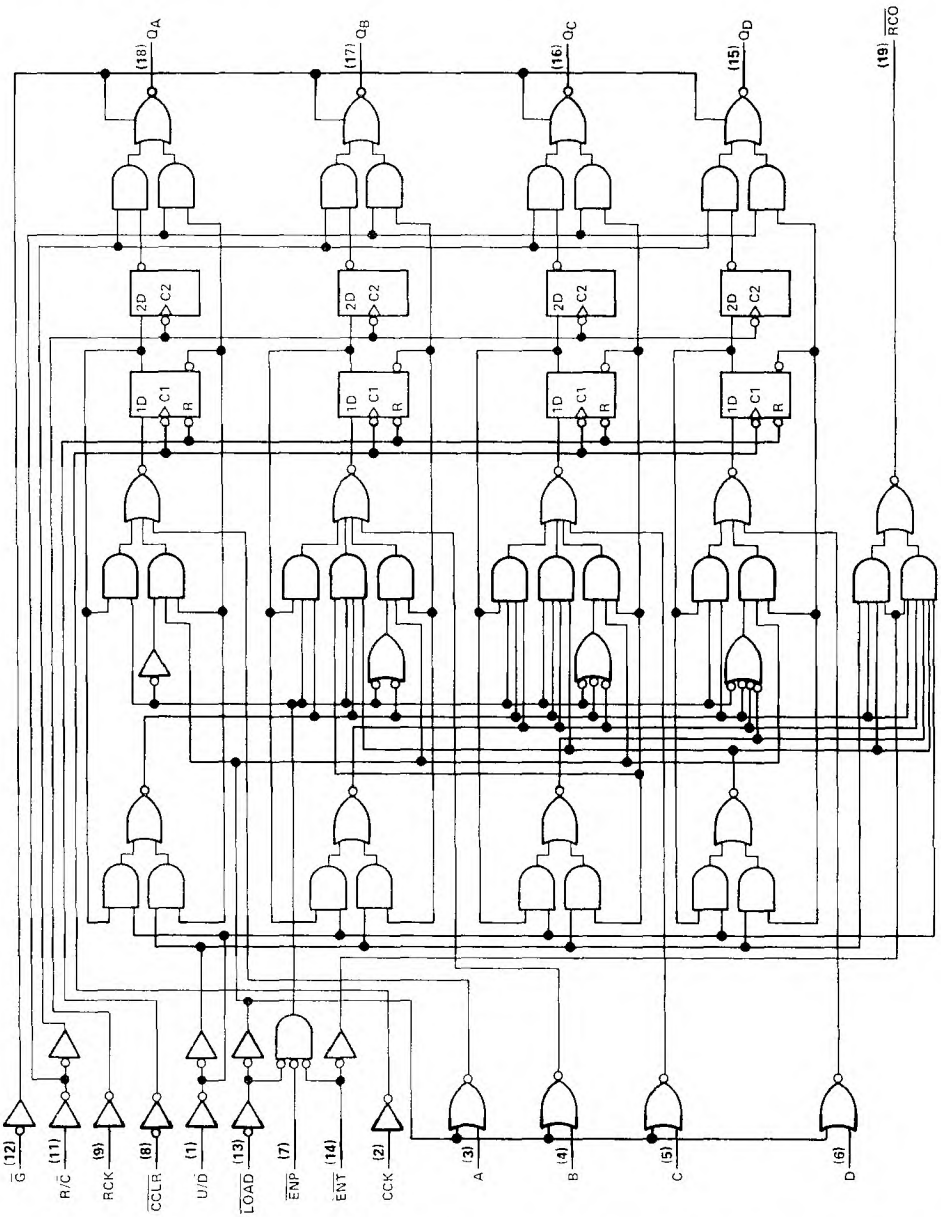

logic diagrams (positive logic) (continued)

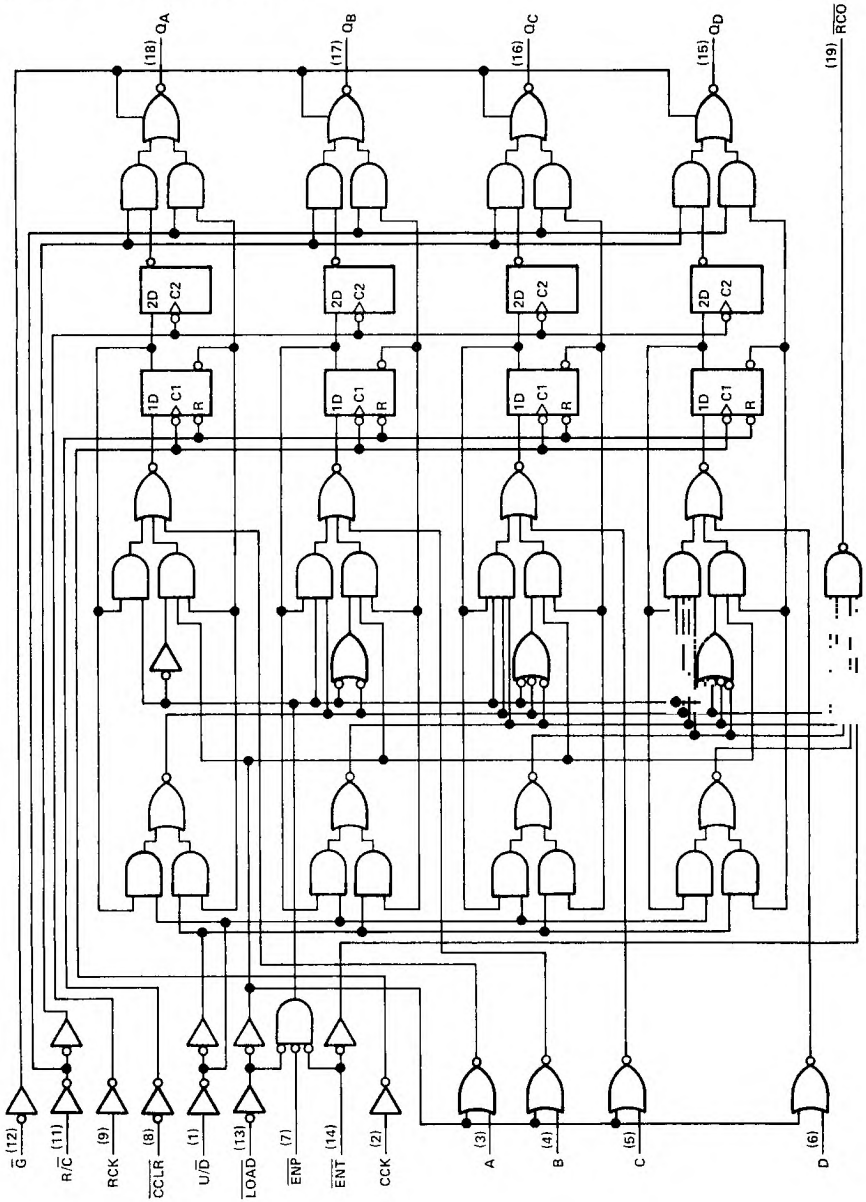

TEXAS INSTRUMENTS
POST OFFICE BOX 655012 • DALLAS, TEXAS 75265

logic diagrams (positive logic) (continued)

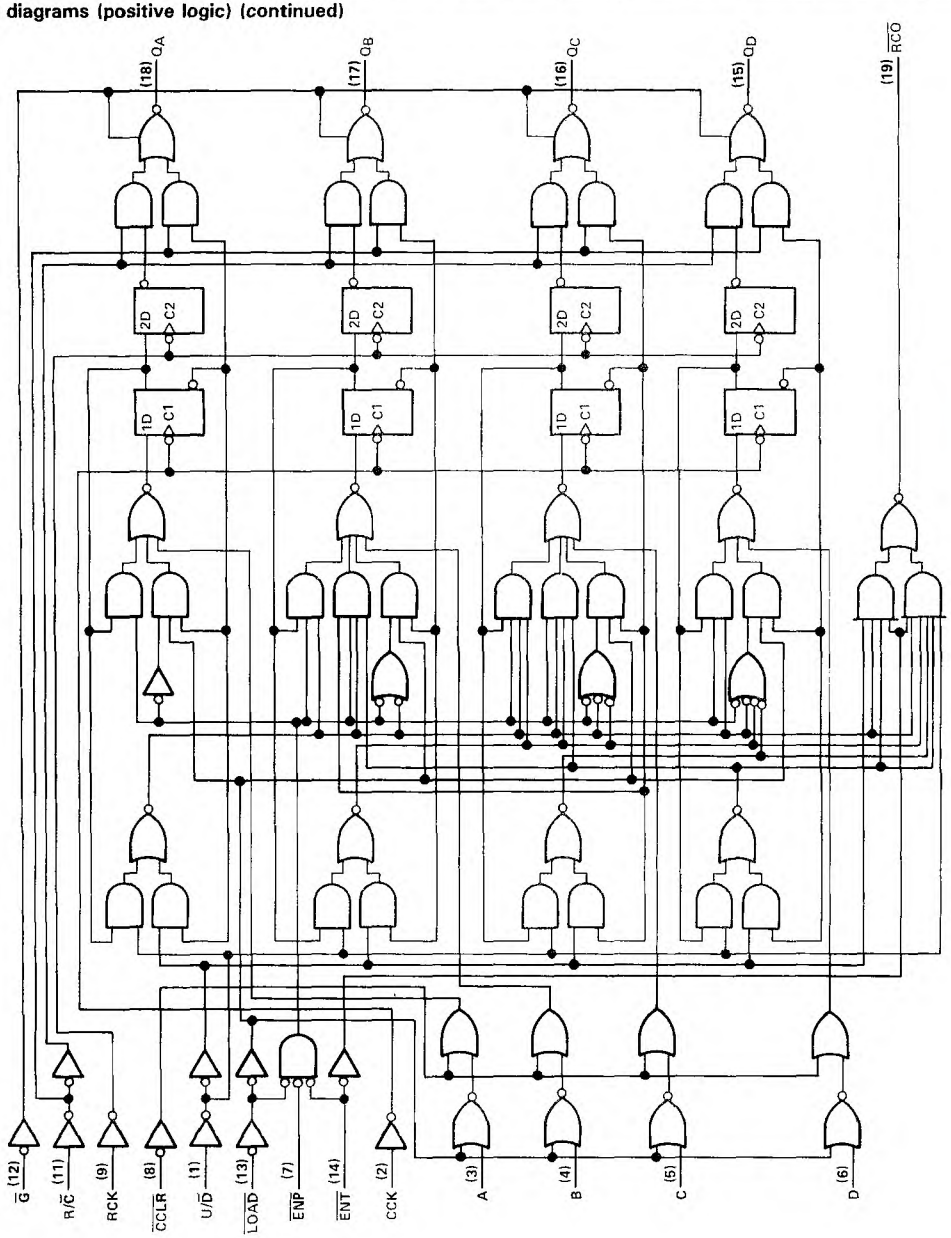

logic diagrams (positive logic) (continued)

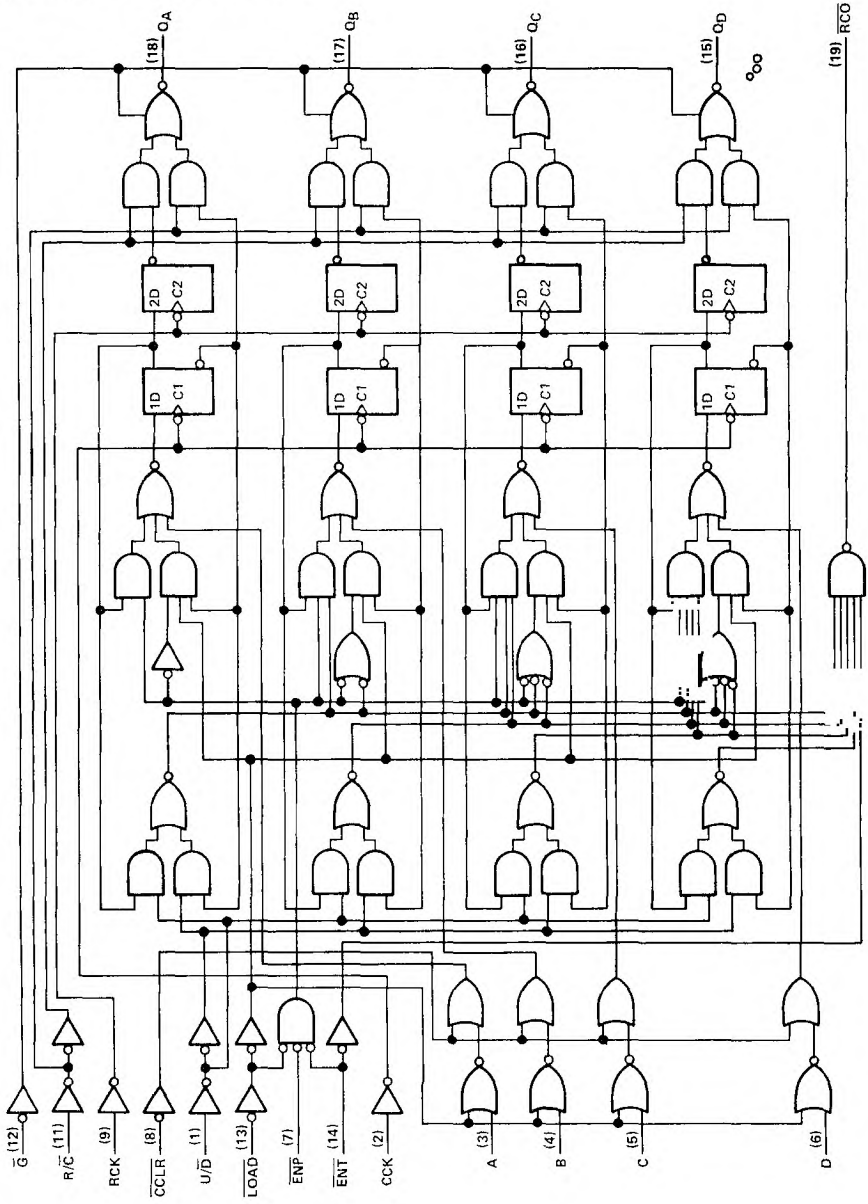

TEXAS INSTRUMENTS
POST OFFICE BOX 655012 • DALLAS, TEXAS 75265

absolute maximum ratings over operating free-air temperature range (unless otherwise noted)

Supply voltage, V_{CC} (see Note 1) . . . . . 7 V
Input voltage . . . . . 7 V
Off-state output voltage . . . . . 5.5 V
Operating free-air temperature range: SN54LS696, SN54LS697, SN54LS699 . . . −55°C to 125°C
SN74LS696, SN74LS697, SN74LS699 . . . . . 0°C to 70°C
Storage temperature range . . . . . −65°C to 150°C

NOTE 1. Voltage values are with respect to network ground terminals

recommended operating conditions

			SN54LS'			SN74LS'			UNIT
			MIN	NOM	MAX	MIN	NOM	MAX	
V_{CC}	Supply voltage		4.5	5	5.5	4.75	5	5.25	V
I_{OH}	High-level output current	Q			−1			−2.6	mA
		RCO			−0.4			−0.4	
I_{OL}	Low-level output current	Q			12			24	mA
		$\overline{RCO}$			4			8	
f_{clock}	Clock frequency	CCK	0		20	0		20	MHz
		RCK	0		20	0		20	
t_w	Pulse duration	CCK high or low	25			25			ns
		RCK high or low	25			25			
		'LS696, 'LS697 $\overline{CCLR}$ low	20			20			
t_{su}	Setup time before CCK ↑	A thru D	30			30			ns
		$\overline{ENP}$ or $\overline{ENT}$	30			30			
		$\overline{LOAD}$	30			30			
		$U/\overline{D}$	35			35			
		$\overline{CCLR}$ inactive	25			25			
		'LS699	30			30			
t_{su}	Setup time CCK ↑ before RCK ↑ (see Note 2)		30			30			ns
t_h	Hold time		0			0			ns
T_A	Operating free-air temperature		−55		125	0		70	°C

NOTE 2: This set up time ensures the register will see stable data from the counter outputs. The clocks may be tied together in which case the register state will be one clock pulse behind the counter.

electrical characteristics over recommended operating free-air temperature range (unless otherwise noted)

PARAMETER			TEST CONDITIONS†		SN54LS' MIN	SN54LS' TYP‡	SN54LS' MAX	SN74LS' MIN	SN74LS' TYP‡	SN74LS' MAX	UNIT
V_{IH}	High-level input voltage				2			2			V
V_{IL}	Low-level input voltage						0.7			0.8	V
V_{IK}	Input clamp voltage		V_{CC}=MIN, I_I=−18 mA				−1.5			−1.5	V
V_{OH}	High-level output voltage	Any Q	V_{CC}=MIN, V_{IH}=2 V, V_{IL}=V_{IL} max	I_{OH}=−1 mA	2.4	3.1					V
		Any Q		I_{OH}=−2.6 mA				2.4	3.1		
		$\overline{RCO}$		I_{OH}=−400 μA	2.5	3.2		2.7	3.2		
V_{OL}	Low-level output voltage	Any Q	V_{CC}=MIN, V_{IH}=2 V, V_{IL}=V_{IL} max	I_{OL}=12 mA		0.25	0.4		0.25	0.4	V
		Any Q		I_{OL}=24 mA					0.35	0.5	
				I_{OL}=4 mA		0.25	0.4		0.25	0.4	
				I_{OL}=8 mA					0.35	0.5	
I_{OZH}	Off-state output current, high-level voltage applied	Any Q	V_{CC}=MAX, $\overline{G}$ at 2 V,	V_O=2.7 V			20			20	μA
I_{OZL}	Off-state output current, low-level voltage applied	Any Q	V_{CC}=MAX, $\overline{G}$ at 2 V,	V_O=0.4 V			−20			−20	μA
I_I	Input current at maximum input voltage		V_{CC}=MAX, V_I=7 V				0.1			0.1	mA
I_{IH}	High-level input current		V_{CC}=MAX, V_I=2.7 V				20			20	μA
I_{IL}	Low-level input current	A thru D	V_{CC}=MAX, V_I=0.4 V				−0.4			−0.4	mA
		All others					−0.2			−0.2	
I_{OS}	Short-circuit output current§	Any Q	V_{CC}=MAX, V_O=0 V		−30		−130	−30		−130	mA
		$\overline{RCO}$			−20		−100	−20		−100	
I_{CCH}	Supply current, outputs high		V_{CC}=MAX, All outputs open	See Note 3		46	65		46	65	mA
I_{CCL}	Supply current, outputs low			See Note 4		48	70		48	70	
I_{CCZ}	Supply current, outputs off			See Note 5		48	70		48	70	

† For conditions shown as MIN or MAX, use the appropriate value specified under recommended operating conditions.
‡ All typical values are at V_{CC} = 5 V, T_A = 25°C.
§ Only one output should be shorted at a time, and duration of the short-circuit should not exceed one second.

NOTES: 3. I_{CCH} is measured after two 4.5 V to 0 V to 4.5 V pulses have been applied to CCK and RCK while $\overline{G}$ is grounded and all other inputs are at 4.5 V.
4. I_{CCL} is measured after two 0 V to 4.5 V to 0 V pulses have been applied to CCK and RCK while all other inputs are grounded.
5. I_{CCZ} is measured after two 0 V to 4.5 V to 0 V pulses have been applied to CCK and RCK while $\overline{G}$ is at 4.5 V and all other inputs are grounded.

switching characteristics, V_{CC} = 5 V, T_A = 25°C (see note 6)

PARAMETER	FROM (INPUT)	TO (OUTPUT)	TEST CONDITIONS	'LS696, 'LS697 MIN	TYP	MAX	'LS699 MIN	TYP	MAX	UNIT
t_{PLH}	CCK↑	$\overline{RCO}$	R_L = 2 kΩ, C_L = 15 pF		23	40		23	40	ns
t_{PHL}					23	40		23	40	ns
t_{PLH}	$\overline{ENT}$	$\overline{RCO}$			13	20		13	20	ns
t_{PHL}					13	20		13	20	ns
t_{PLH}	CCK↑	Q	R_L = 667 Ω, C_L = 45 pF		12	20		12	20	ns
t_{PHL}					17	25		17	25	ns
t_{PLH}	RCK↑	Q			12	20		12	20	ns
t_{PHL}					17	25		17	25	ns
t_{PHL}	$\overline{CCLR}$↓	Q			23	40				ns
t_{PLH}	R/$\overline{C}$	Q			16	25		16	25	ns
t_{PHL}					16	25		16	25	ns
t_{PZH}	$\overline{G}$↓	Q			19	30		19	30	ns
t_{PZL}					19	30		19	30	ns
t_{PHZ}	$\overline{G}$↑	Q	R_L = 667 Ω, C_L = 5 pF		17	30		17	30	ns
t_{PLZ}					17	30		17	30	ns

NOTE 6: Load circuits and voltage waveforms are shown in Section 1.

TEXAS INSTRUMENTS
POST OFFICE BOX 655012 • DALLAS, TEXAS 75265

typical operating sequences

'LS696 DECADE COUNTER, Asynchronous Clear

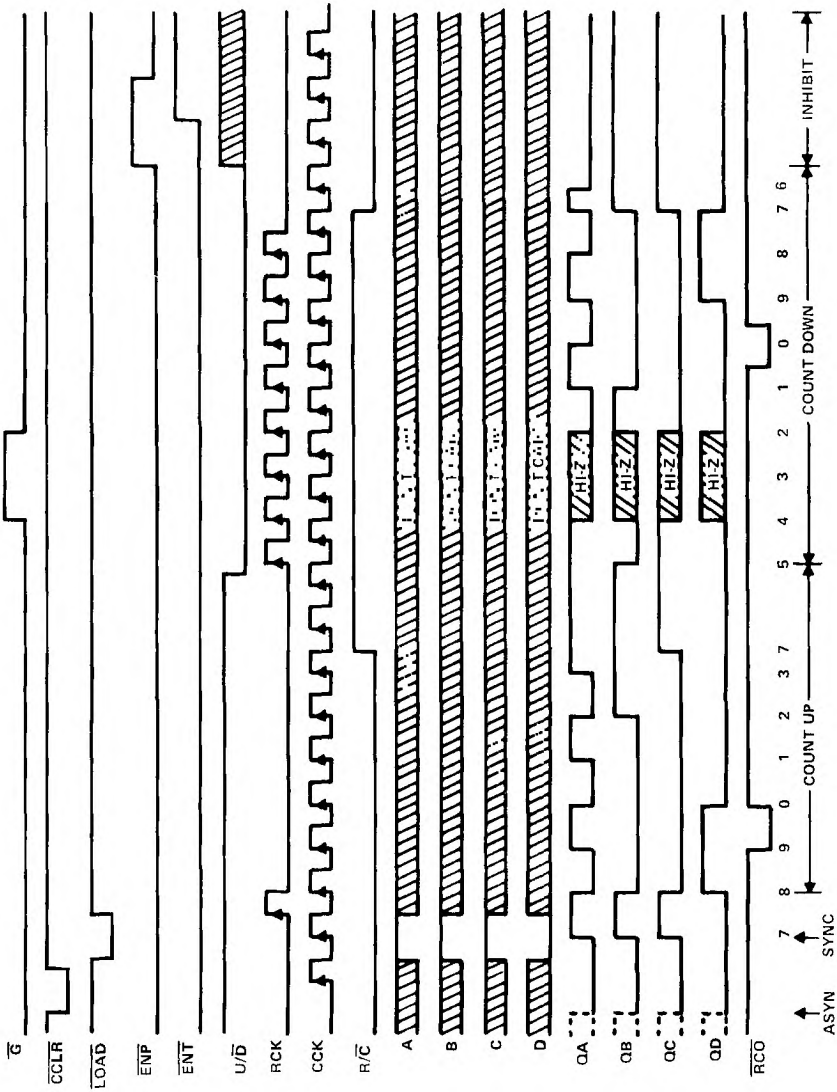

typical operating sequences (continued)

'LS697 BINARY COUNTER, Asynchronous Clear
'LS699 BINARY COUNTER, Synchronous Clear

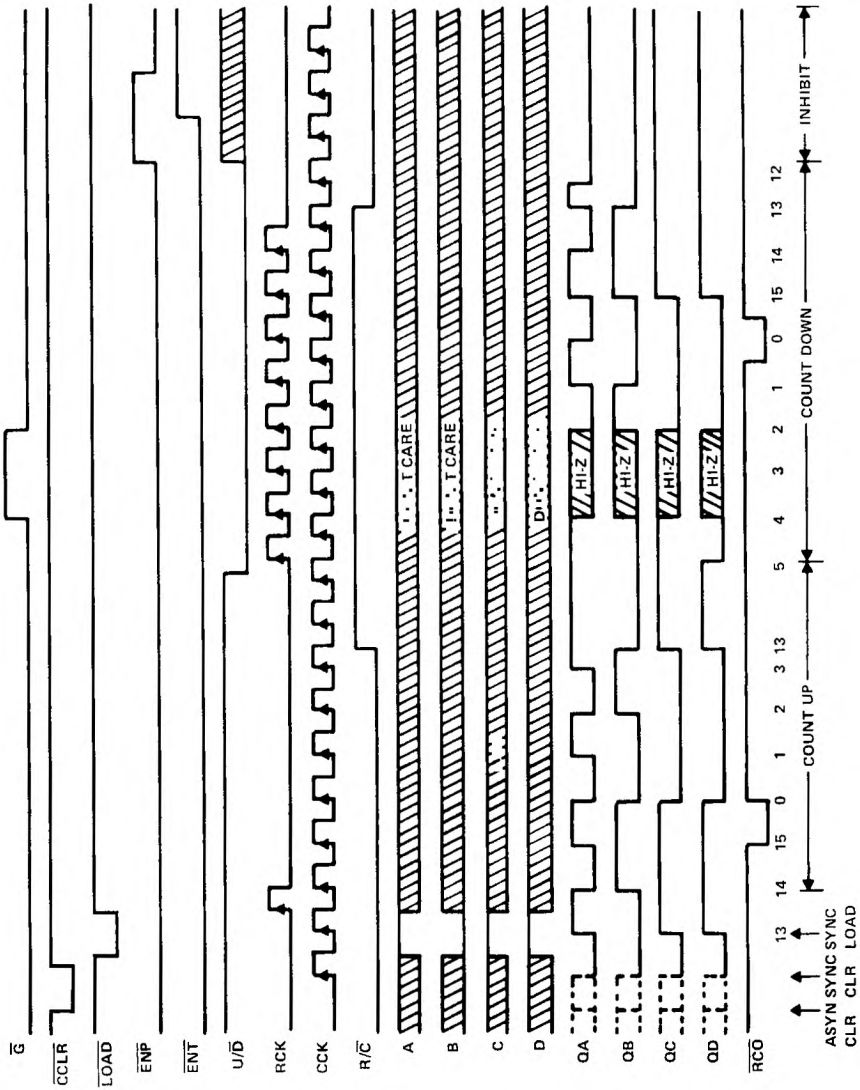

TEXAS INSTRUMENTS
POST OFFICE BOX 655012 • DALLAS, TEXAS 75265